BNC Straight Plug Crimp

Specifications:

Electrical

Frequency Range	: DC-1 GHz
Nominal Impedance	: 75Ω
Voltage Rating	: 500V Max.

Materials

Bodies	: Brass Per JIS-C3604
Centre Contact	: Brass Per JIS-C3604
Insulation	: PTFE Per ASTM D1457 and ASTM D1710
Crimp Ferrule	: Brass Per JIS-C2700

Mechanical

For use with 8218 or similar style cable

Cable Attachment	: Outer - Crimp, Inner - Solder/Crimp
Crimp Size Required	: Contact - 1.8(.071) HEX. Crimp tool Ferrule - 5.5(.216) HEX. Crimp tool

Environmental

Operating Temperature Range	: -20°C to +80°C

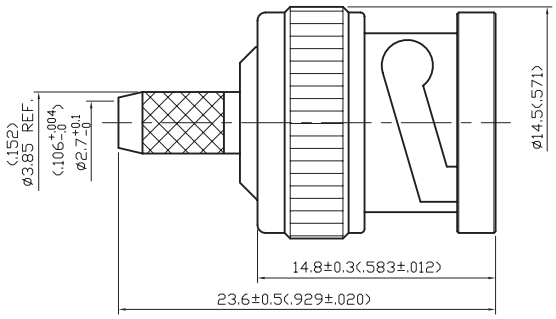

Dimensions : Millimetres (Inches)

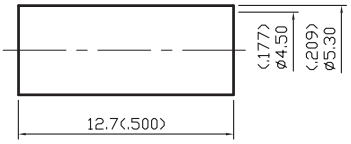

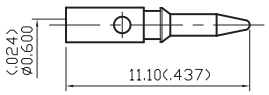

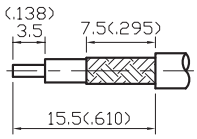

Stripping Dimension
Scale 2:1

Finishes and Others

No.	Description	Material	QTY	Finish
1	Crimp Ferrule	Brass	1	Nickel
2	Center Contact	Brass		Gold
3	Body	Brass		Nickel 100µ" min.
4	Washer	Brass		Nickel
5	Spring Washer	SK-5		Nickel
6	Washer	Brass		Nickel
7	Gasket	Rubber		Red
8	Insulation	PTFE		None
9	Shell	Zinc		Nickel

Part Number Table

Description	Part Number
RF/Coaxial, BNC Plug, STR, 75Ω, Crimp	MC23596

Important Notice : This data sheet and its contents (the "Information") belong to the members of the Premier Farnell group of companies (the "Group") or are licensed to it. No licence is granted for the use of it other than for information purposes in connection with the products to which it relates. No licence of any intellectual property rights is granted. The Information is subject to change without notice and replaces all data sheets previously supplied. The Information supplied is believed to be accurate but the Group assumes no responsibility for its accuracy or completeness, any error in or omission from it or for any use made of it. Users of this data sheet should check for themselves the Information and the suitability of the products for their purpose and not make any assumptions based on information included or omitted. Liability for loss or damage resulting from any reliance on the Information or use of it (including liability resulting from negligence or where the Group was aware of the possibility of such loss or damage arising) is excluded. This will not operate to limit or restrict the Group's liability for death or personal injury resulting from its negligence. Multicomp is the registered trademark of the Group. © Premier Farnell plc 2012.