Number of contacts

# 48, 32

## Female connectors

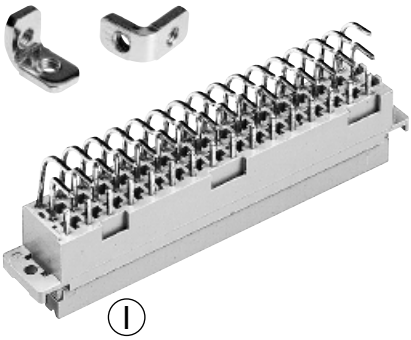

I

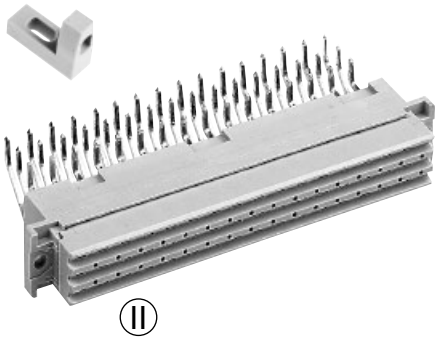

II

| Identification | Number of contacts | Contact arrangement | Part No. | Performance levels according to IEC 60 603-2. Explanation chapter 00 | |
|---|---|---|---|---|---|
| | | | 3 | 2 | 1 |
| Female connector with angled solder pins 1 x 1 mm | 48 | I 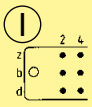 | Performance level 3 on request | 09 06 248 6826 | Performance level 1 on request |
| | 32 | | | 09 06 232 6826 | |
| | 48 | II | | 09 06 248 6836 | |
| | 32 | | | 09 06 232 6846 | |
| | 32 | | | 09 06 232 6836 | |
| Dimensions | | | | I 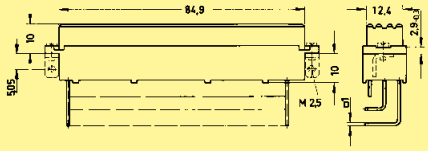 | |
| | | | | II 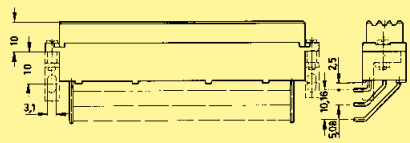 | |
| | | | | 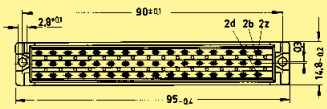 | |
| Fixing bracket | | Metal | 09 06 000 9912[1)] | for version I | |
| [1)] Order 2 pieces for one connector | | Plastic | 09 06 000 9975[1)] | for version II | |
| Board drillings<br>Mounting side | | | | I 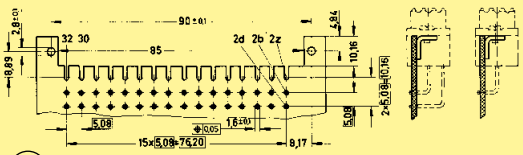 | |
| | | | | II 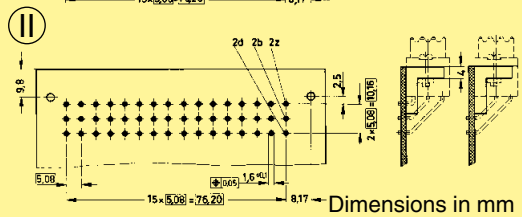 | |

Dimensions in mm