molex
one company › a world of innovation

This document was generated on 01/13/2014

PLEASE CHECK WWW.MOLEX.COM FOR LATEST PART INFORMATION

Part Number: 19017-0050

Status: Active

Description: InsulKrimp™ Quick Disconnect, Female, for 10-12 (5.00-3.30mm²) Wire, Mylar Tape, Tab 6.35 x 0.81mm

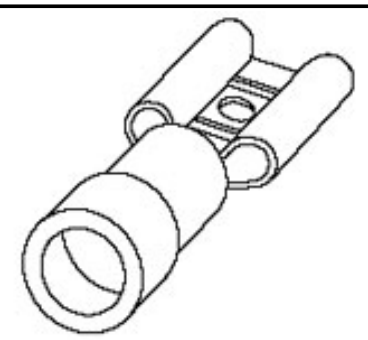

Series

image - Reference only

Documents:

Drawing (PDF)
Product Specification PS-19902-011 (PDF)
Product Specification PS-19902-015 (PDF)
RoHS Certificate of Compliance (PDF)

Agency Certification

CSA	LR18689
UL	E79133

General

Product Family	Quick Disconnects
Series	19017
Crimp Quality Equipment	Yes
Insulated	No
Product Name	InsulKrimp™
Type	Quick Disconnect
UPC	800753036390

Physical

Barrel Type	Closed
Color - Resin	Yellow
Flammability	94V-0
Gender	Female
Glow-Wire Compliant	No
Insulation	PVC
Lock to Mating Part	None
Material - Metal	Brass
Material - Plating Mating	Tin
Material - Plating Termination	Tin
Material - Resin	PVC
Net Weight	1.289/g
Orientation	Straight
Packaging Type	Adhesive Tape on Reel
Polarized to Mating Part	No
Tab Thickness	0.81mm
Tab Width	6.35mm
Temperature Range - Operating	-50°C to +105°C
Termination Interface: Style	Crimp or Compression
Wire Insulation Diameter	6.40mm max.
Wire Size AWG	10, 12
Wire Size mm²	3.30 - 5.00

Electrical

Voltage - Maximum	600V

Material Info

Old Part Number	C-2143T

Reference - Drawing Numbers

Product Specification	PS-19902-011, PS-19902-015
Sales Drawing	SD-19017-003

EU RoHS
ELV and RoHS Compliant
REACH SVHC
Not Reviewed
Low-Halogen Status
Not Low-Halogen

China RoHS

Need more information on product environmental compliance?

Email productcompliance@molex.com
For a multiple part number RoHS Certificate of Compliance, click here

Please visit the Contact Us section for any non-product compliance questions.

Search Parts in this Series
19017Series

Application Tooling | **FAQ**

Tooling specifications and manuals are found by selecting the products below. Crimp Height Specifications are then contained in the Application Tooling Specification document.

Global

Description	Product #
Crimp Dies for MTA-100 Tape Applicator used in 3BF Press, MTA-105 Tape Applicator used in TM-2000™ Press, and ATP-301 Air Crimping Press for Mylar Tape Mounted Terminals	0192880195
Mini-Mac™ Applicator	0638853200

This document was generated on 01/13/2014
PLEASE CHECK WWW.MOLEX.COM FOR LATEST PART INFORMATION