PART NAME	HAND-HELD PLASTIC BOX STYLE 3	PART No.	HP-3663-B	REVISION DATE	01-25-13

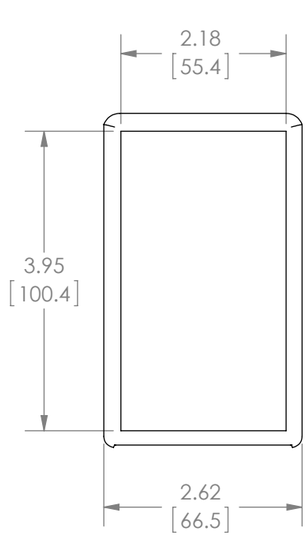

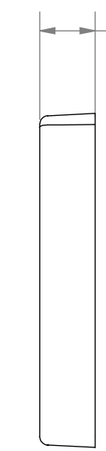

COVER

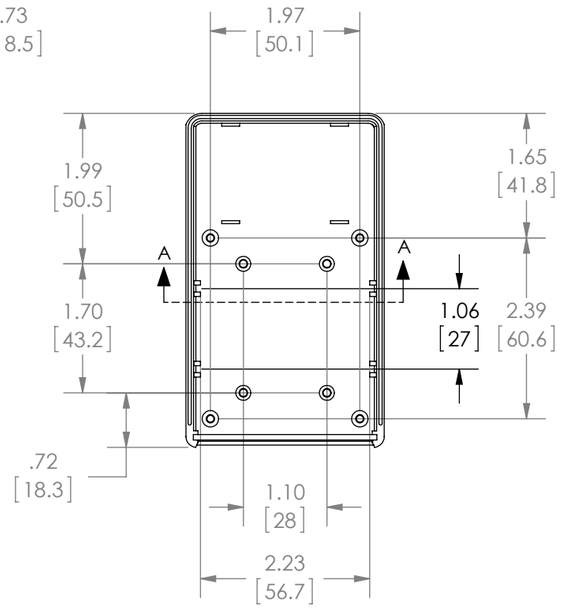

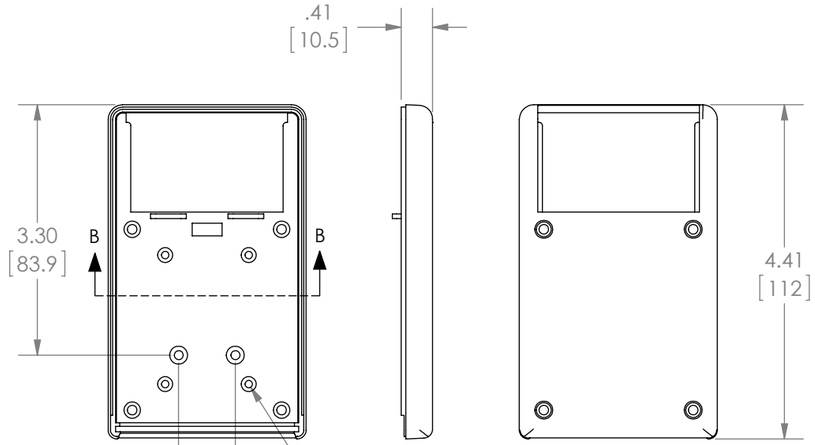

BOTTOM

∅ .197[5] BOSS WITH
∅.098[2.5] HOLE (4X) ↧ .197[5]
MOUNTING BOSSES USE EITHER
M3 OR # 4 SHEET METAL SCREW
(NOT SUPPLIED)

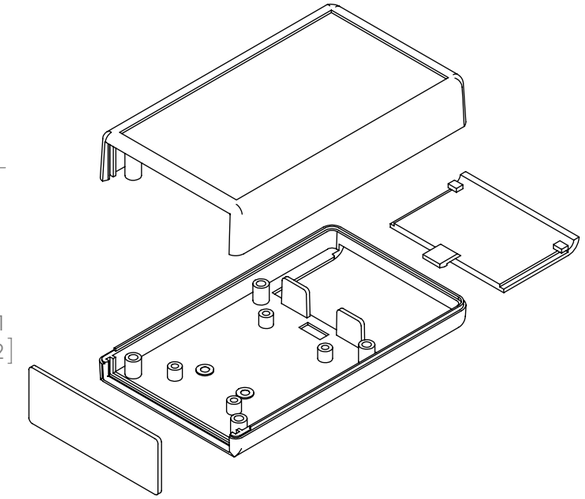

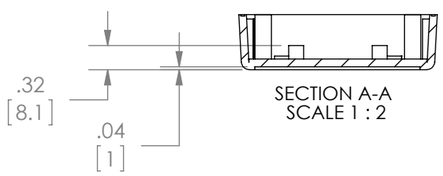

SECTION A-A
SCALE 1 : 2

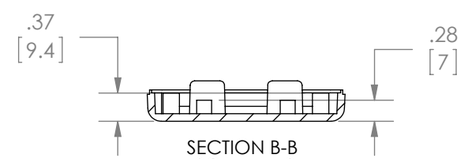

SECTION B-B
SCALE 1 : 2

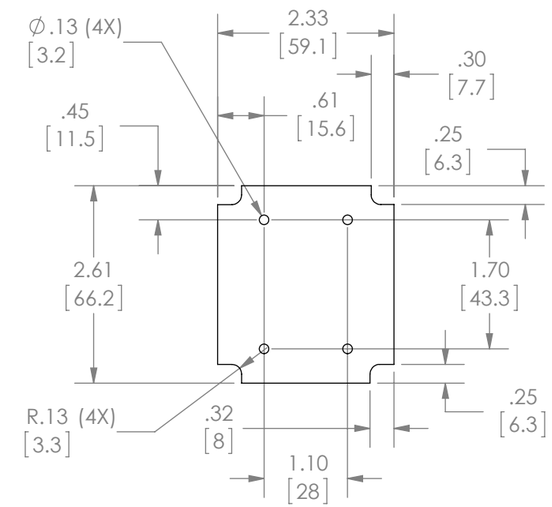

SUGGESTED PC BOARD LAYOUT

BATTERY COVER

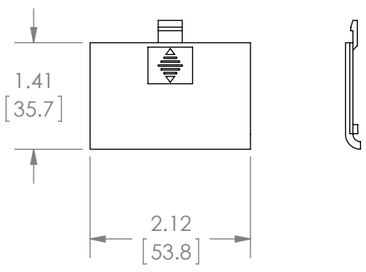

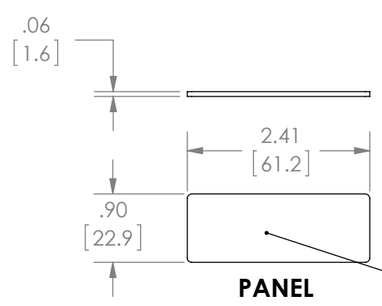

PANEL

VIEWING AREA
2.28[57.9] X .82[20.8]
AFTER ASSEMBLED

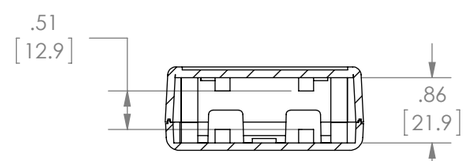

SECTION C-C
SCALE 1 : 2

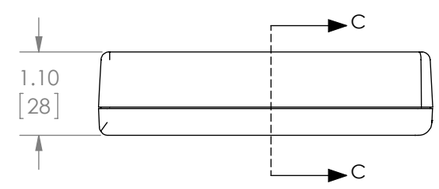

MATERIAL AND FINISH:
BLACK HIGH-IMPACT ABS (UL94-HB)
COVER, BOTTOM, PANEL, AND BATTERY COVER

OPTIONAL ACCESSORIES:
INFRARED PANELS P/N HP-3645
BELT CLIP (BLACK) P/N HH-3595-BCB
2 AAA BATTERY HOLDER: HH-3630
2 AA BATTERY HOLDER: HH-3632
9V BATTERY CLIP: HH-3449

NOTE:
1. FOUR (4X) M3 X .63[16] LG BLACK CSK HEAD SCREWS SUPPLIED FOR ASSEMBLY
2. ALL HOLE DIAMETERS HAVE +/- .005[+/-.13] TOLERANCE
   ALL OTHER DIMENSIONS HAVE +/-.015[+/-.38] TOLERANCE
3. ALL OUTSIDE AND INSIDE DRAFT ANGLE: 3˚
4. DIMENSIONS ARE INCH[MM]-THIRD ANGLE PROJECTION