PART NAME	BRACKET - SLIDING SHELF	PART No.	2387-ABS

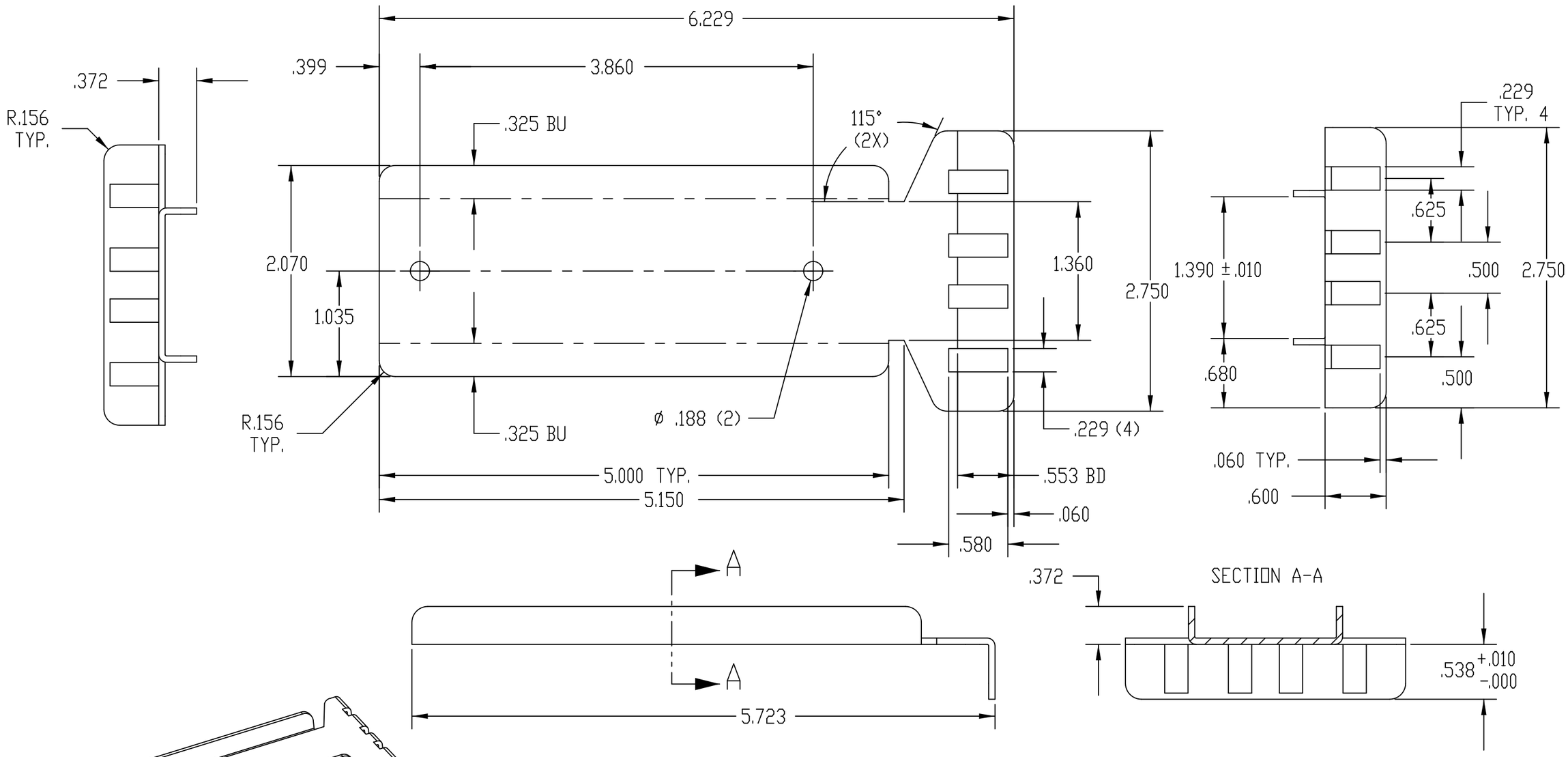

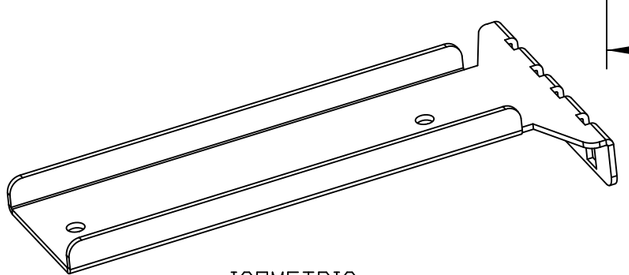

ISOMETRIC
SCALE 1:2

CUT SIZE: 6.229 X 2.750 X 16GA. C.R.S.
FINISH: SMOOTH BLACK "EBL"