Linear Optocoupler, High Gain Stability, Wide Bandwidth

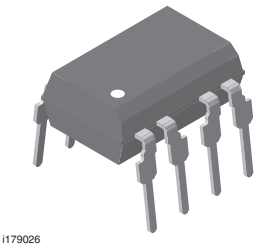

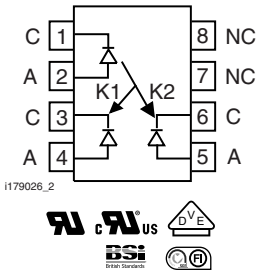

FEATURES

- Couples AC and DC signals
- 0.01 % servo linearity
- Wide bandwidth, > 200 kHz
- High gain stability, ± 0.005 %/°C typically
- Low input-output capacitance
- Low power consumption, < 15 mW
- Isolation test voltage, 5300 V_{RMS}, 1 s
- Internal insulation distance, > 0.4 mm
- Compliant to RoHS Directive 2002/95/EC and in accordance to WEEE 2002/96/EC

Pb-free

e3

RoHS COMPLIANT

DESCRIPTION

The IL300 linear optocoupler consists of an AlGaAs IRLED irradiating an isolated feedback and an output PIN photodiode in a bifurcated arrangement. The feedback photodiode captures a percentage of the LEDs flux and generates a control signal (I_{P1}) that can be used to servo the LED drive current. This technique compensates for the LED's non-linear, time, and temperature characteristics. The output PIN photodiode produces an output signal (I_{P2}) that is linearly related to the servo optical flux created by the LED.

The time and temperature stability of the input-output coupler gain (K3) is insured by using matched PIN photodiodes that accurately track the output flux of the LED.

APPLICATIONS

- Power supply feedback voltage/current
- Medical sensor isolation
- Audio signal interfacing
- Isolated process control transducers
- Digital telephone isolation

AGENCY APPROVALS

- UL file no. E52744, system code H
- DIN EN 60747-5-2 (VDE 0884)
- DIN EN 60747-5-5 (pending) available with option 1
- BSI
- FIMKO

ORDERING INFORMATION

I	L	3	0	0	-	D	E	F	G	-	X	0	#	#	T
PART NUMBER						K3 BIN					PACKAGE OPTION				TAPE AND REEL

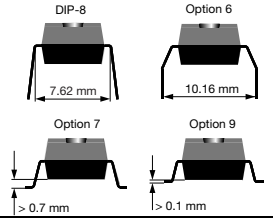

AGENCY CERTIFIED/ PACKAGE	K3 BIN							
UL, cUL, BSI, FIMKO	**0.557 to 1.618**	**0.765 to 1.181**	**0.851 to 1.181**	**0.765 to 0.955**	**0.851 to 1.061**	**0.945 to 1.181**	**0.851 to 0.955**	**0.945 to 1.061**
DIP-8	IL300	IL300-DEFG	-	-	IL300-EF	-	IL300-E	IL300-F
DIP-8, 400 mil, option 6	IL300-X006	IL300-DEFG-X006	-	-	IL300-EF-X006	IL300-FG-X006	IL300-E-X006	IL300-F-X006
SMD-8, option 7	IL300-X007T(1)	IL300-DEFG-X007T(1)	IL300-EFG-X007	IL300-DE-X007T	IL300-EF-X007T(1)	-	IL300-E-X007T	IL300-F-X007
SMD-8, option 9	IL300-X009T(1)	IL300-DEFG-X009T(1)	-	-	IL300-EF-X009T(1)	-	-	IL300-F-X009T(1)
VDE, UL	**0.557 to 1.618**	**0.765 to 1.181**	**0.851 to 1.181**	**0.765 to 0.955**	**0.851 to 1.061**	**0.945 to 1.181**	**0.851 to 0.955**	**0.945 to 1.061**
DIP-8	IL300-X001	IL300-DEFG-X001	-	-	IL300-EF-X001	-	IL300-E-X001	IL300-F-X001
DIP-8, 400 mil, option 6	IL300-X016	IL300-DEFG-X016	-	-	IL300-EF-X016	-	-	IL300-F-X016
SMD-8, option 7	IL300-X017	IL300-DEFG-X017T(1)	-	-	IL300-EF-X017T(1)	-	IL300-E-X017T	IL300-F-X017T(1)
SMD-8, option 9	-	-	-	-	-	-	-	IL300-F-X019T(1)

Note

(1) Also available in tubes, do not put "T" on the end.

For technical questions, contact: optocoupleranswers@vishay.com

THIS DOCUMENT IS SUBJECT TO CHANGE WITHOUT NOTICE. THE PRODUCTS DESCRIBED HEREIN AND THIS DOCUMENT ARE SUBJECT TO SPECIFIC DISCLAIMERS, SET FORTH AT www.vishay.com/doc?91000

OPERATION DESCRIPTION

A typical application circuit (figure 1) uses an operational amplifier at the circuit input to drive the LED. The feedback photodiode sources current to R1 connected to the inverting input of U1. The photocurrent, I_{P1}, will be of a magnitude to satisfy the relationship of ($I_{P1} = V_{IN}/R1$).

The magnitude of this current is directly proportional to the feedback transfer gain (K1) times the LED drive current ($V_{IN}/R1 = K1 \times I_F$). The op-amp will supply LED current to force sufficient photocurrent to keep the node voltage (Vb) equal to Va.

The output photodiode is connected to a non-inverting voltage follower amplifier. The photodiode load resistor, R2, performs the current to voltage conversion. The output amplifier voltage is the product of the output forward gain (K2) times the LED current and photodiode load, R2 ($V_O = I_F \times K2 \times R2$).

Therefore, the overall transfer gain (V_O/V_{IN}) becomes the ratio of the product of the output forward gain (K2) times the photodiode load resistor (R2) to the product of the feedback transfer gain (K1) times the input resistor (R1). This reduces to

$V_O/V_{IN} = (K2 \times R2)/(K1 \times R1)$.

The overall transfer gain is completely independent of the LED forward current. The IL300 transfer gain (K3) is expressed as the ratio of the output gain (K2) to the feedback gain (K1). This shows that the circuit gain becomes the product of the IL300 transfer gain times the ratio of the output to input resistors

$V_O/V_{IN} = K3\ (R2/R1)$.

K1-SERVO GAIN

The ratio of the input photodiode current (I_{P1}) to the LED current (I_F) i.e., $K1 = I_{P1}/I_F$.

K2-FORWARD GAIN

The ratio of the output photodiode current (I_{P2}) to the LED current (I_F), i.e., $K2 = I_{P2}/I_F$.

K3-TRANSFER GAIN

The transfer gain is the ratio of the forward gain to the servo gain, i.e., K3 = K2/K1.

ΔK3-TRANSFER FAIN LINEARITY

The percent deviation of the transfer gain, as a function of LED or temperature from a specific transfer gain at a fixed LED current and temperature.

PHOTODIODE

A silicon diode operating as a current source. The output current is proportional to the incident optical flux supplied by the LED emitter. The diode is operated in the photovoltaic or photoconductive mode. In the photovoltaic mode the diode functions as a current source in parallel with a forward biased silicon diode.

The magnitude of the output current and voltage is dependent upon the load resistor and the incident LED optical flux. When operated in the photoconductive mode the diode is connected to a bias supply which reverse biases the silicon diode. The magnitude of the output current is directly proportional to the LED incident optical flux.

LED (LIGHT EMITTING DIODE)

An infrared emitter constructed of AlGaAs that emits at 890 nm operates efficiently with drive current from 500 µA to 40 mA. Best linearity can be obtained at drive currents between 5 mA to 20 mA. Its output flux typically changes by - 0.5 %/°C over the above operational current range.

APPLICATION CIRCUIT

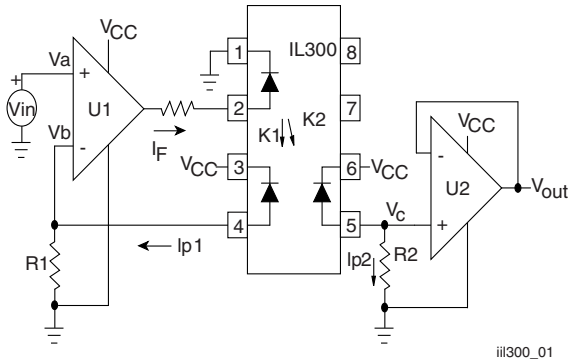

Fig. 1 - Typical Application Circuit

For technical questions, contact: optocoupleranswers@vishay.com
THIS DOCUMENT IS SUBJECT TO CHANGE WITHOUT NOTICE. THE PRODUCTS DESCRIBED HEREIN AND THIS DOCUMENT ARE SUBJECT TO SPECIFIC DISCLAIMERS, SET FORTH AT www.vishay.com/doc?91000

ABSOLUTE MAXIMUM RATINGS (T_{amb} = 25 °C, unless otherwise specified)				
PARAMETER	**TEST CONDITION**	**SYMBOL**	**VALUE**	**UNIT**
INPUT				
Power dissipation		P_{diss}	160	mW
Derate linearly from 25 °C			2.13	mW/°C
Forward current		I_F	60	mA
Surge current (pulse width < 10 µs)		I_{PK}	250	mA
Reverse voltage		V_R	5	V
Thermal resistance		R_{th}	470	K/W
Junction temperature		T_j	100	°C
OUTPUT				
Power dissipation		P_{diss}	50	mW
Derate linearly from 25 °C			0.65	mW/°C
Reverse voltage		V_R	50	V
Thermal resistance		R_{th}	1500	K/W
Junction temperature		T_j	100	°C
COUPLER				
Total package dissipation at 25 °C		P_{tot}	210	mW
Derate linearly from 25 °C			2.8	mW/°C
Storage temperature		T_{stg}	- 55 to + 150	°C
Operating temperature		T_{amb}	- 55 to + 100	°C
Isolation test voltage		V_{ISO}	> 5300	V_{RMS}
Isolation resistance	V_{IO} = 500 V, T_{amb} = 25 °C	R_{IO}	> 10^{12}	Ω
	V_{IO} = 500 V, T_{amb} = 100 °C	R_{IO}	> 10^{11}	Ω

Note

- Stresses in excess of the absolute maximum ratings can cause permanent damage to the device. Functional operation of the device is not implied at these or any other conditions in excess of those given in the operational sections of this document. Exposure to absolute maximum ratings for extended periods of the time can adversely affect reliability.

ELECTRICAL CHARACTERISTICS (T_{amb} = 25 °C, unless otherwise specified)						
PARAMETER	**TEST CONDITION**	**SYMBOL**	**MIN.**	**TYP.**	**MAX.**	**UNIT**
INPUT (LED EMITTER)						
Forward voltage	I_F = 10 mA	V_F		1.25	1.50	V
V_F temperature coefficient		$\Delta V_F/\Delta$°C		- 2.2		mV/°C
Reverse current	V_R = 5 V	I_R		1		µA
Junction capacitance	V_F = 0 V, f = 1 MHz	C_j		15		pF
Dynamic resistance	I_F = 10 mA	$\Delta V_F/\Delta I_F$		6		Ω
OUTPUT						
Dark current	V_{det} = - 15 V, I_F = 0 A	I_D		1	25	nA
Open circuit voltage	I_F = 10 mA	V_D		500		mV
Short circuit current	I_F = 10 mA	I_{SC}		70		µA
Junction capacitance	V_F = 0 V, f = 1 MHz	C_j		12		pF
Noise equivalent power	V_{det} = 15 V	NEP		4 x 10^{-14}		W/√Hz
COUPLER						
Input-output capacitance	V_F = 0 V, f = 1 MHz			1		pF
K1, servo gain (I_{P1}/I_F)	I_F = 10 mA, V_{det} = - 15 V	K1	0.0050	0.007	0.011	
Servo current [1][2]	I_F = 10 mA, V_{det} = - 15 V	I_{P1}		70		µA
K2, forward gain (I_{P2}/I_F)	I_F = 10 mA, V_{det} = - 15 V	K2	0.0036	0.007	0.011	
Forward current	I_F = 10 mA, V_{det} = - 15 V	I_{P2}		70		µA
K3, transfer gain (K2/K1) [1][2]	I_F = 10 mA, V_{det} = - 15 V	K3	0.56	1	1.65	K2/K1

For technical questions, contact: optocoupleranswers@vishay.com
THIS DOCUMENT IS SUBJECT TO CHANGE WITHOUT NOTICE. THE PRODUCTS DESCRIBED HEREIN AND THIS DOCUMENT ARE SUBJECT TO SPECIFIC DISCLAIMERS, SET FORTH AT www.vishay.com/doc?91000

ELECTRICAL CHARACTERISTICS (T_{amb} = 25 °C, unless otherwise specified)						
PARAMETER	**TEST CONDITION**	**SYMBOL**	**MIN.**	**TYP.**	**MAX.**	**UNIT**
COUPLER						
Transfer gain stability	I_F = 10 mA, V_{det} = - 15 V	$\Delta K3/\Delta T_A$		± 0.005	± 0.05	%/°C
Transfer gain linearity	I_F = 1 mA to 10 mA	$\Delta K3$		± 0.25		%
	I_F = 1 mA to 10 mA, T_{amb} = 0 °C to 75 °C			± 0.5		%
PHOTOCONDUCTIVE OPERATION						
Frequency response	I_{Fq} = 10 mA, MOD = ± 4 mA, R_L = 50 Ω	BW (- 3 db)		200		kHz
Phase response at 200 kHz	V_{det} = - 15 V			- 45		Deg.

Notes

- Minimum and maximum values were tested requierements. Typical values are characteristics of the device and are the result of engineering evaluation. Typical values are for information only and are not part of the testing requirements.

(1) Bin sorting:
K3 (transfer gain) is sorted into bins that are ± 6 % , as follows:
Bin A = 0.557 to 0.626
Bin B = 0.620 to 0.696
Bin C = 0.690 to 0.773
Bin D = 0.765 to 0.859
Bin E = 0.851 to 0.955
Bin F = 0.945 to 1.061
Bin G = 1.051 to 1.181
Bin H = 1.169 to 1.311
Bin I = 1.297 to 1.456
Bin J = 1.442 to 1.618
K3 = K2/K1. K3 is tested at I_F = 10 mA, V_{det} = - 15 V.

(2) Bin categories: All IL300s are sorted into a K3 bin, indicated by an alpha character that is marked on the part. The bins range from “A” through “J”.
The IL300 is shipped in tubes of 50 each. Each tube contains only one category of K3. The category of the parts in the tube is marked on the tube label as well as on each individual part.

(3) Category options: standard IL300 orders will be shipped from the categories that are available at the time of the order. Any of the ten categories may be shipped. For customers requiring a narrower selection of bins, the bins can be grouped together as follows:
IL300-DEFG: order this part number to receive categories D, E, F, G only.
IL300-EF: order this part number to receive categories E, F only.
IL300-E: order this part number to receive category E only.

SWITCHING CHARACTERISTICS						
PARAMETER	**TEST CONDITION**	**SYMBOL**	**MIN.**	**TYP.**	**MAX.**	**UNIT**
Switching time	ΔI_F = 2 mA, I_{Fq} = 10 mA	t_r		1		µs
		t_f		1		µs
Rise time		t_r		1.75		µs
Fall time		t_f		1.75		µs

COMMON MODE TRANSIENT IMMUNITY						
PARAMETER	**TEST CONDITION**	**SYMBOL**	**MIN.**	**TYP.**	**MAX.**	**UNIT**
Common mode capacitance	V_F = 0 V, f = 1 MHz	C_{CM}		0.5		pF
Common mode rejection ratio	f = 60 Hz, R_L = 2.2 kΩ	CMRR		130		dB

For technical questions, contact: optocoupleranswers@vishay.com
THIS DOCUMENT IS SUBJECT TO CHANGE WITHOUT NOTICE. THE PRODUCTS DESCRIBED HEREIN AND THIS DOCUMENT ARE SUBJECT TO SPECIFIC DISCLAIMERS, SET FORTH AT www.vishay.com/doc?91000

TYPICAL CHARACTERISTICS (T_{amb} = 25 °C, unless otherwise specified)

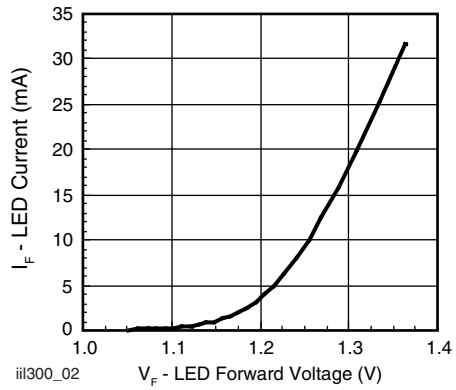

Fig. 2 - LED Forward Current vs. Forward Voltage

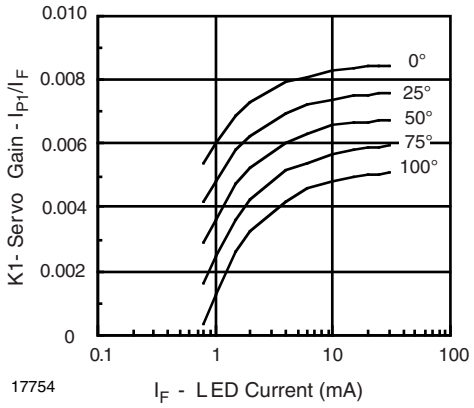

Fig. 5 - Servo Gain vs. LED Current and Temperature

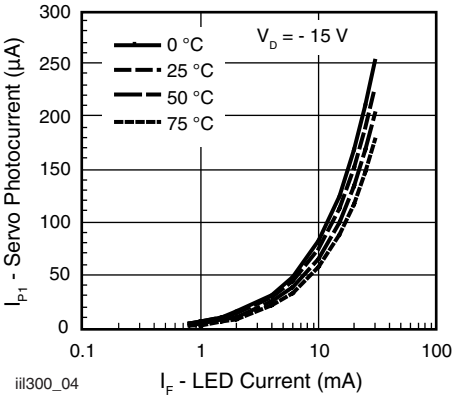

Fig. 3 - Servo Photocurrent vs. LED Current and Temperature

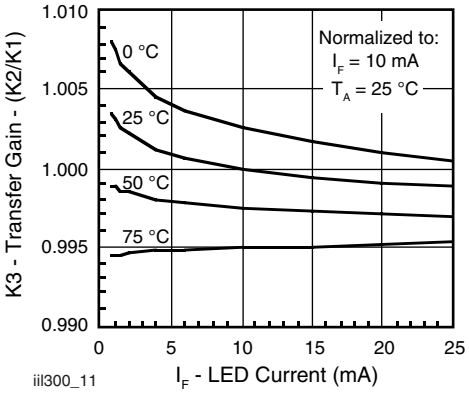

Fig. 6 - Normalized Transfer Gain vs. LED Current and Temperature

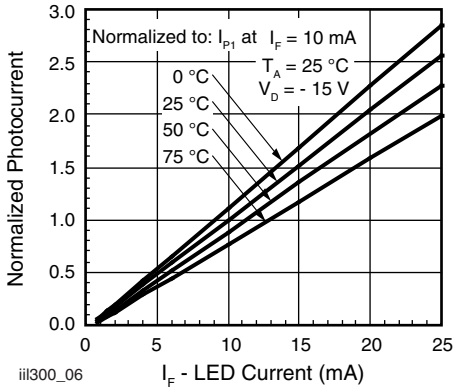

Fig. 4 - Normalized Servo Photocurrent vs. LED Current and Temperature

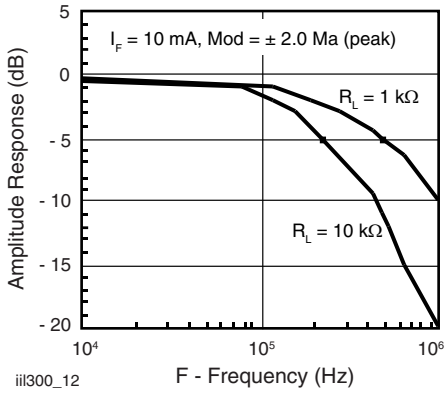

Fig. 7 - Amplitude Response vs. Frequency

For technical questions, contact: optocoupleranswers@vishay.com
THIS DOCUMENT IS SUBJECT TO CHANGE WITHOUT NOTICE. THE PRODUCTS DESCRIBED HEREIN AND THIS DOCUMENT ARE SUBJECT TO SPECIFIC DISCLAIMERS, SET FORTH AT www.vishay.com/doc?91000

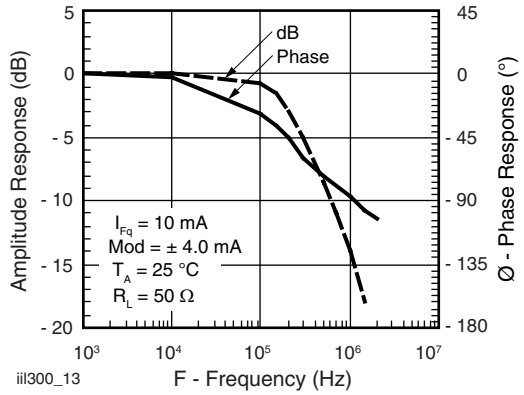

Fig. 8 - Amplitude and Phase Response vs. Frequency

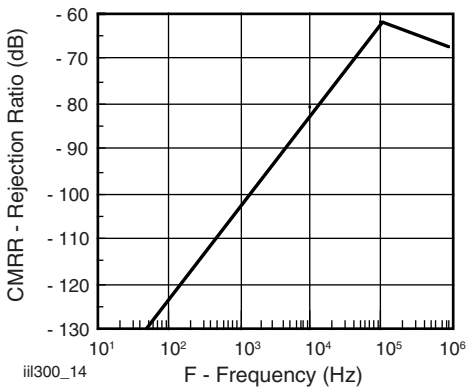

Fig. 9 - Common-Mode Rejection

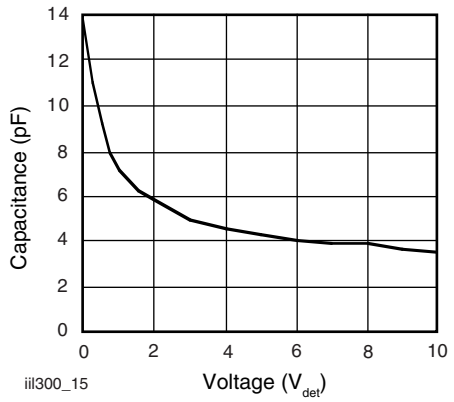

Fig. 10 - Photodiode Junction Capacitance vs. Reverse Voltage

APPLICATION CONSIDERATIONS

In applications such as monitoring the output voltage from a line powered switch mode power supply, measuring bioelectric signals, interfacing to industrial transducers, or making floating current measurements, a galvanically isolated, DC coupled interface is often essential. The IL300 can be used to construct an amplifier that will meet these needs.

The IL300 eliminates the problems of gain nonlinearity and drift induced by time and temperature, by monitoring LED output flux.

A pin photodiode on the input side is optically coupled to the LED and produces a current directly proportional to flux falling on it. This photocurrent, when coupled to an amplifier, provides the servo signal that controls the LED drive current.

The LED flux is also coupled to an output PIN photodiode. The output photodiode current can be directly or amplified to satisfy the needs of succeeding circuits.

ISOLATED FEEDBACK AMPLIFIER

The IL300 was designed to be the central element of DC coupled isolation amplifiers. Designing the IL300 into an amplifier that provides a feedback control signal for a line powered switch mode power is quite simple, as the following example will illustrate.

See figure 12 for the basic structure of the switch mode supply using the Infineon TDA4918 push-pull switched power supply control cChip. Line isolation are provided by the high frequency transformer. The voltage monitor isolation will be provided by the IL300.

The isolated amplifier provides the PWM control signal which is derived from the output supply voltage. Figure 13 more closely shows the basic function of the amplifier.

The control amplifier consists of a voltage divider and a non-inverting unity gain stage. The TDA4918 data sheet indicates that an input to the control amplifier is a high quality operational amplifier that typically requires a + 3 V signal. Given this information, the amplifier circuit topology shown in figure 14 is selected.

The power supply voltage is scaled by R1 and R2 so that there is + 3 V at the non-inverting input (V_a) of U1. This voltage is offset by the voltage developed by photocurrent flowing through R3. This photocurrent is developed by the optical flux created by current flowing through the LED. Thus as the scaled monitor voltage (V_a) varies it will cause a change in the LED current necessary to satisfy the differential voltage needed across R3 at the inverting input. The first step in the design procedure is to select the value of R3 given the LED quiescent current (I_{Fq}) and the servo gain (K1). For this design, I_{Fq} = 12 mA. Figure 4 shows the servo photocurrent at I_{Fq} is found to be 100 mA. With this data R3 can be calculated.

$$R3 = \frac{V_b}{I_{PI}} = \frac{3\ V}{100\ \mu A} = 30\ k\Omega$$

For technical questions, contact: optocoupleranswers@vishay.com
THIS DOCUMENT IS SUBJECT TO CHANGE WITHOUT NOTICE. THE PRODUCTS DESCRIBED HEREIN AND THIS DOCUMENT ARE SUBJECT TO SPECIFIC DISCLAIMERS, SET FORTH AT www.vishay.com/doc?91000

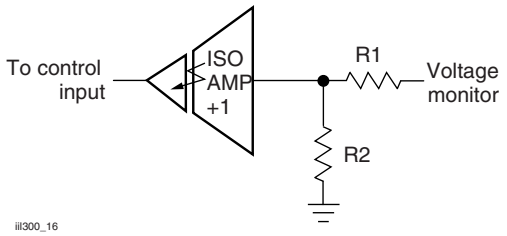

Fig. 11 - Isolated Control Amplifier

For best input offset compensation at U1, R2 will equal R3. The value of R1 can easily be calculated from the following.

$$R1 = R2 \times \left(\frac{V_{MONITOR}}{V_a} - 1\right)$$

The value of R5 depends upon the IL300 Transfer Gain (K3). K3 is targeted to be a unit gain device, however to minimize the part to part Transfer Gain variation, Infineon offers K3 graded into ± 5 % bins. R5 can determined using the following equation,

$$R5 = \frac{V_{OUT}}{V_{MONITOR}} \times \frac{R3 \times (R1 + R2)}{R2 \times K3}$$

or if a unity gain amplifier is being designed ($V_{MONITOR} = V_{OUT}$, R1 = 0), the equation simplifies to:

$$R5 = \frac{R3}{K3}$$

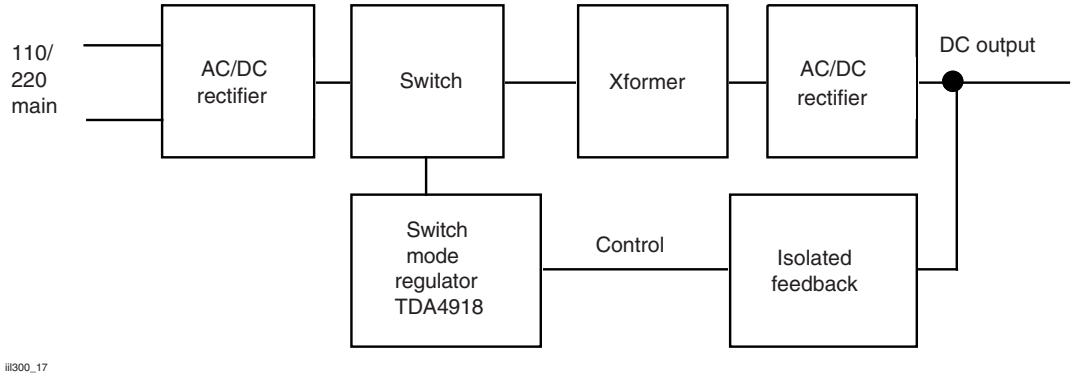

Fig. 12 - Switching Mode Power Supply

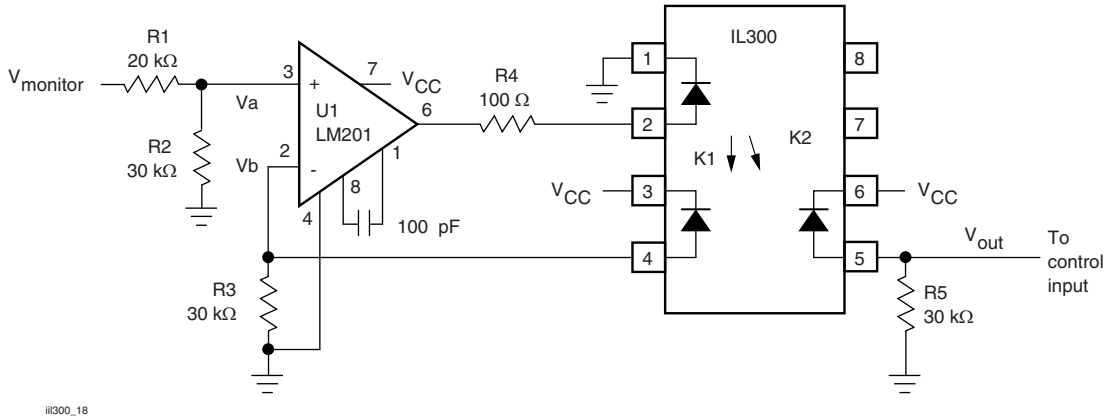

Fig. 13 - DC Coupled Power Supply Feedback Amplifier

For technical questions, contact: optocoupleranswers@vishay.com
THIS DOCUMENT IS SUBJECT TO CHANGE WITHOUT NOTICE. THE PRODUCTS DESCRIBED HEREIN AND THIS DOCUMENT ARE SUBJECT TO SPECIFIC DISCLAIMERS, SET FORTH AT www.vishay.com/doc?91000

Table 1. Gives the value of R5 given the production K3 bin.

TABLE 1 - R5 SELECTION				
BIN	K3			R5 RESISTOR
	MIN.	MAX.	TYP.	1 % kΩ
A	0.560	0.623	0.59	51.1
B	0.623	0.693	0.66	45.3
C	0.693	0.769	0.73	41.2
D	0.769	0.855	0.81	37.4
E	0.855	0.950	0.93	32.4
F	0.950	1.056	1	30
G	1.056	1.175	1.11	27
H	1.175	1.304	1.24	24
I	1.304	1.449	1.37	22
J	1.449	1.610	1.53	19.4

The last step in the design is selecting the LED current limiting resistor (R4). The output of the operational amplifier is targeted to be 50 % of the V_{CC}, or 2.5 V. With an LED quiescent current of 12 mA the typical LED (V_F) is 1.3 V. Given this and the operational output voltage, R4 can be calculated.

$$R4 = \frac{V_{opamp} - V_F}{I_{Fq}} = \frac{2.5\ V - 1.3\ V}{12\ mA} = 100\ \Omega$$

The circuit was constructed with an LM201 differential operational amplifier using the resistors selected. The amplifier was compensated with a 100 pF capacitor connected between pins 1 and 8.

The DC transfer characteristics are shown in figure 17. The amplifier was designed to have a gain of 0.6 and was measured to be 0.6036. Greater accuracy can be achieved by adding a balancing circuit, and potentiometer in the input divider, or at R5. The circuit shows exceptionally good gain linearity with an RMS error of only 0.0133 % over the input voltage range of 4 V to 6 V in a servo mode; see figure 15.

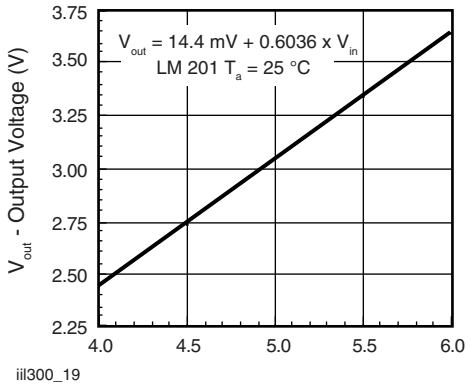

Fig. 14 - Transfer Gain

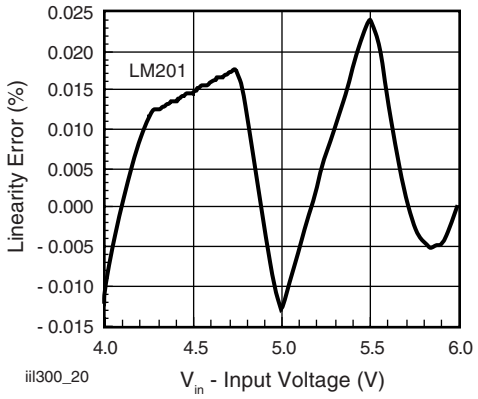

Fig. 15 - Linearity Error vs. Input Voltage

The AC characteristics are also quite impressive offering a - 3 dB bandwidth of 100 kHz, with a - 45° phase shift at 80 kHz as shown in figure 16.

For technical questions, contact: optocoupleranswers@vishay.com
THIS DOCUMENT IS SUBJECT TO CHANGE WITHOUT NOTICE. THE PRODUCTS DESCRIBED HEREIN AND THIS DOCUMENT ARE SUBJECT TO SPECIFIC DISCLAIMERS, SET FORTH AT www.vishay.com/doc?91000

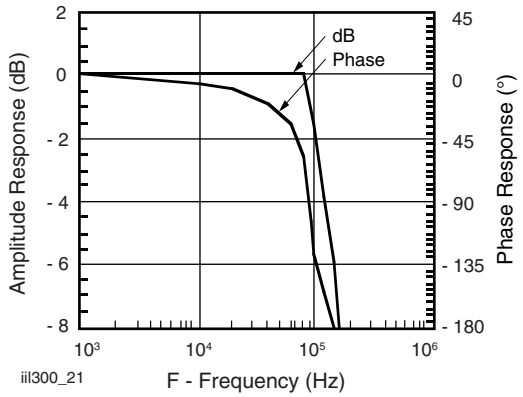

Fig. 16 - Amplitude and Phase Power Supply Control

The same procedure can be used to design isolation amplifiers that accept bipolar signals referenced to ground. These amplifiers circuit configurations are shown in figure 17. In order for the amplifier to respond to a signal that swings above and below ground, the LED must be pre biased from a separate source by using a voltage reference source (V_{ref1}). In these designs, R3 can be determined by the following equation.

$$R3 = \frac{V_{ref1}}{I_{P1}} = \frac{V_{ref1}}{K1 I_{Fq}}$$

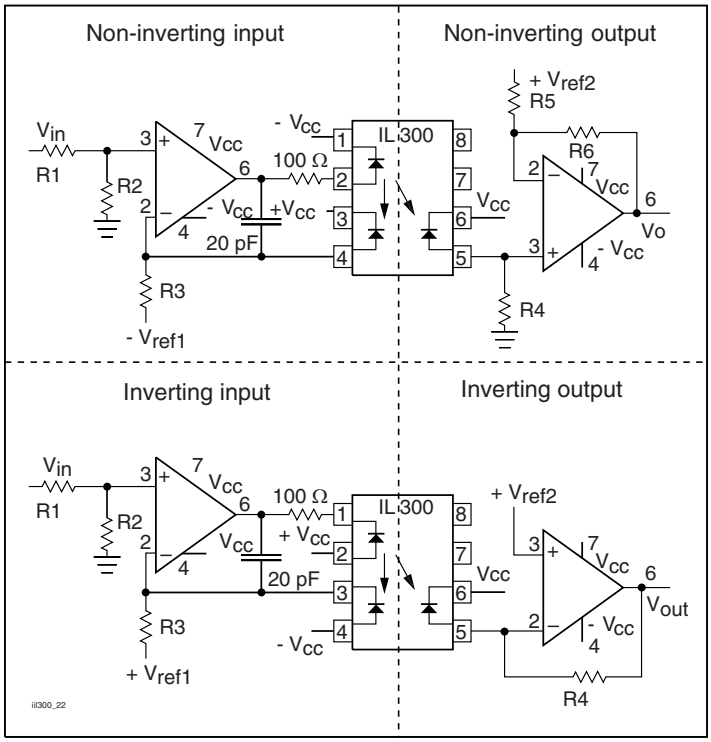

Fig. 17 - Non-inverting and Inverting Amplifiers

TABLE 2 - OPTOLINEAR AMPLIEFIERS				
AMPLIFIER	**INPUT**	**OUTPUT**	**GAIN**	**OFFSET**
Non-inverting	Inverting	Inverting	$\frac{V_{OUT}}{V_{IN}} = \frac{K3 \times R4 \times R2}{R3 \times (R1 \times R2)}$	$V_{ref2} = \frac{V_{ref1} \times R4 \times K3}{R3}$
	Non-inverting	Non-inverting	$\frac{V_{OUT}}{V_{IN}} = \frac{K3 \times R4 \times R2 \times (R5 + R6)}{R3 \times R5 \times (R1 \times R2)}$	$V_{ref2} = \frac{- V_{ref1} \times R4 \times (R5 + R6) \times K3}{R3 \times R6}$
Inverting	Inverting	Non-inverting	$\frac{V_{OUT}}{V_{IN}} = \frac{- K3 \times R4 \times R2 \times (R5 + R6)}{R3 \times (R1 \times R2)}$	$V_{ref2} = \frac{V_{ref1} \times R4 \times (R5 + R6) \times K3}{R3 \times R6}$
	Non-inverting	Inverting	$\frac{V_{OUT}}{V_{IN}} = \frac{- K3 \times R4 \times R2}{R3 \times (R1 \times R2)}$	$V_{ref2} = \frac{- V_{ref1} \times R4 \times K3}{R3}$

For technical questions, contact: optocoupleranswers@vishay.com
THIS DOCUMENT IS SUBJECT TO CHANGE WITHOUT NOTICE. THE PRODUCTS DESCRIBED HEREIN AND THIS DOCUMENT ARE SUBJECT TO SPECIFIC DISCLAIMERS, SET FORTH AT www.vishay.com/doc?91000

These amplifiers provide either an inverting or non-inverting transfer gain based upon the type of input and output amplifier. Table 2 shows the various configurations along with the specific transfer gain equations. The offset column refers to the calculation of the output offset or V_{ref2} necessary to provide a zero voltage output for a zero voltage input. The non-inverting input amplifier requires the use of a bipolar supply, while the inverting input stage can be implemented with single supply operational amplifiers that permit operation close to ground.

For best results, place a buffer transistor between the LED and output of the operational amplifier when a CMOS opamp is used or the LED I_{Fq} drive is targeted to operate beyond 15 mA. Finally the bandwidth is influenced by the magnitude of the closed loop gain of the input and output amplifiers. Best bandwidths result when the amplifier gain is designed for unity.

PACKAGE DIMENSIONS in millimeters

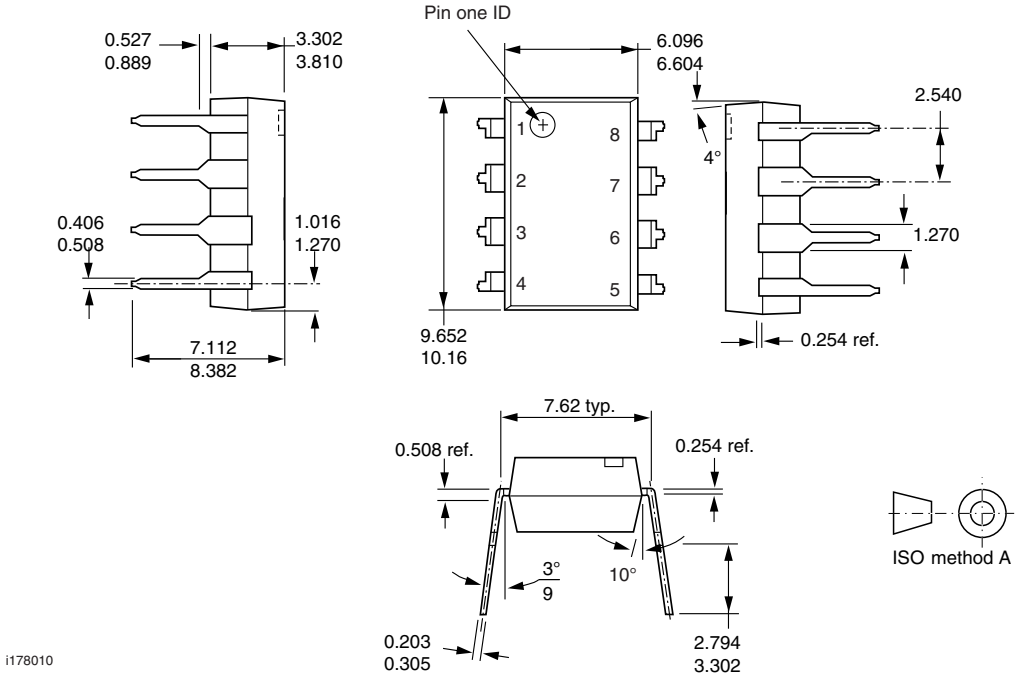

Option 6

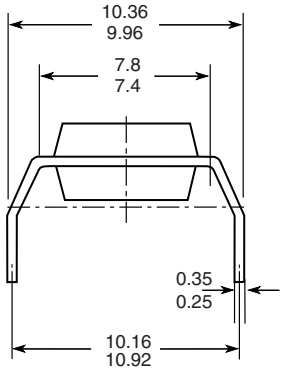

Option 7

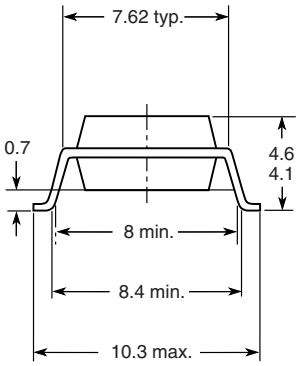

Option 9

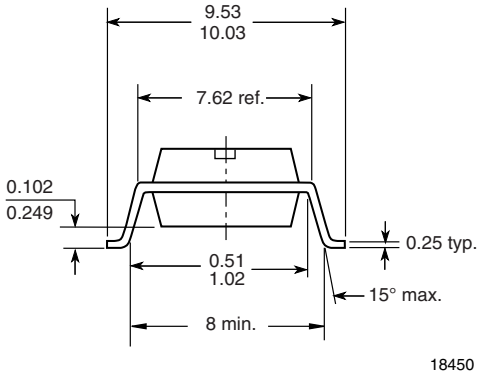

PACKAGE MARKING (this is an example of the IL300-E-X001)

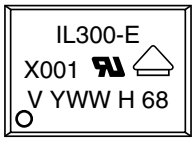

For technical questions, contact: optocoupleranswers@vishay.com
THIS DOCUMENT IS SUBJECT TO CHANGE WITHOUT NOTICE. THE PRODUCTS DESCRIBED HEREIN AND THIS DOCUMENT ARE SUBJECT TO SPECIFIC DISCLAIMERS, SET FORTH AT www.vishay.com/doc?91000

Disclaimer

ALL PRODUCT, PRODUCT SPECIFICATIONS AND DATA ARE SUBJECT TO CHANGE WITHOUT NOTICE TO IMPROVE RELIABILITY, FUNCTION OR DESIGN OR OTHERWISE.

Vishay Intertechnology, Inc., its affiliates, agents, and employees, and all persons acting on its or their behalf (collectively, “Vishay”), disclaim any and all liability for any errors, inaccuracies or incompleteness contained in any datasheet or in any other disclosure relating to any product.

Vishay makes no warranty, representation or guarantee regarding the suitability of the products for any particular purpose or the continuing production of any product. To the maximum extent permitted by applicable law, Vishay disclaims (i) any and all liability arising out of the application or use of any product, (ii) any and all liability, including without limitation special, consequential or incidental damages, and (iii) any and all implied warranties, including warranties of fitness for particular purpose, non-infringement and merchantability.

Statements regarding the suitability of products for certain types of applications are based on Vishay’s knowledge of typical requirements that are often placed on Vishay products in generic applications. Such statements are not binding statements about the suitability of products for a particular application. It is the customer’s responsibility to validate that a particular product with the properties described in the product specification is suitable for use in a particular application. Parameters provided in datasheets and/or specifications may vary in different applications and performance may vary over time. All operating parameters, including typical parameters, must be validated for each customer application by the customer’s technical experts. Product specifications do not expand or otherwise modify Vishay’s terms and conditions of purchase, including but not limited to the warranty expressed therein.

Except as expressly indicated in writing, Vishay products are not designed for use in medical, life-saving, or life-sustaining applications or for any other application in which the failure of the Vishay product could result in personal injury or death. Customers using or selling Vishay products not expressly indicated for use in such applications do so at their own risk. Please contact authorized Vishay personnel to obtain written terms and conditions regarding products designed for such applications.

No license, express or implied, by estoppel or otherwise, to any intellectual property rights is granted by this document or by any conduct of Vishay. Product names and markings noted herein may be trademarks of their respective owners.

Material Category Policy

Vishay Intertechnology, Inc. hereby certifies that all its products that are identified as RoHS-Compliant fulfill the definitions and restrictions defined under Directive 2011/65/EU of The European Parliament and of the Council of June 8, 2011 on the restriction of the use of certain hazardous substances in electrical and electronic equipment (EEE) - recast, unless otherwise specified as non-compliant.

Please note that some Vishay documentation may still make reference to RoHS Directive 2002/95/EC. We confirm that all the products identified as being compliant to Directive 2002/95/EC conform to Directive 2011/65/EU.

Vishay Intertechnology, Inc. hereby certifies that all its products that are identified as Halogen-Free follow Halogen-Free requirements as per JEDEC JS709A standards. Please note that some Vishay documentation may still make reference to the IEC 61249-2-21 definition. We confirm that all the products identified as being compliant to IEC 61249-2-21 conform to JEDEC JS709A standards.