Cree® XLamp® MC-E LED

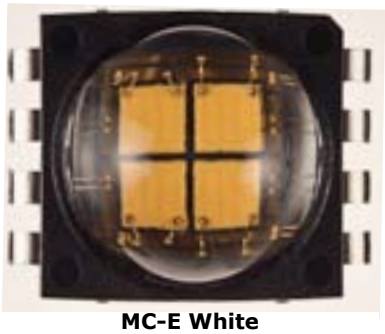

MC-E White

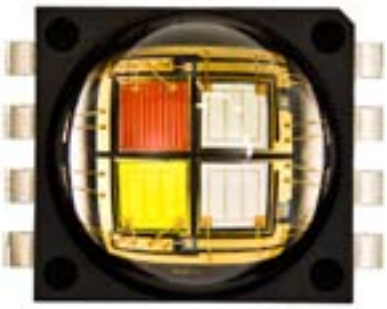

MC-E Color

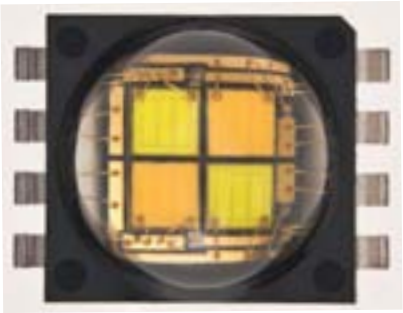

MC-E Dynamic White

PRODUCT DESCRIPTION

The XLamp MC-E LED is a family of lighting-class, multi-chip LEDs that provides high lumen output in a small package. Compared to discrete LEDs, XLamp MC-E LEDs reduce the distance between LED die, creating a small optical source for excellent optical control and efficient color mixing. XLamp MC-E LEDs can reduce LED system complexity by reducing the number of components required.

Cree XLamp LEDs bring high performance and quality of light to a wide range of lighting applications, including color-changing lighting, portable and personal lighting, outdoor lighting, indoor directional lighting, and entertainment lighting.

FEATURES

- Available in white (2600 K – 10,000 K CCT), EasyWhite®, Dynamic White, or color (RGBW)
- ANSI-compatible neutral & warm white chromaticity bins
- Individually addressable LEDs
- MC-E Dynamic White LEDs have two cool-white (6500 K) and two warm-white (2700 K) LED die
- MC-E EasyWhite LEDs available in 2 and 4-step bins, up to 85 CRI
- Maximum drive current: 700 mA per LED die
- Reflow solderable – JEDEC J-STD-020
- Electrically neutral thermal path
- RoHS- and REACh-compliant
- UL-recognized component (E349212)

TABLE OF CONTENTS

Characteristics
- Complete Package 2
- Per LED Die (White) 2
- Per LED Die (Color) 2

Flux Characteristics
- White 3
- EasyWhite 4

Relative Spectral Power Distribution
- White 5
- Color 5

Relative Flux Output vs Junction Temperature 6
Electrical Characteristics 7
Relative Intensity vs. Current 7
Typical Spatial Radiation Pattern .. 8
Reflow Soldering Characteristics .. 9
Notes 10
Mechanical Dimensions 12
Tape and Reel 13
Packaging 14

Copyright © 2008-2014 Cree, Inc. All rights reserved. The information in this document is subject to change without notice. Cree®, the Cree logo, XLamp® and EasyWhite® are are registered trademarks of Cree, Inc.

Cree, Inc.
4600 Silicon Drive
Durham, NC 27703
USA Tel: +1.919.313.5300

CHARACTERISTICS - COMPLETE PACKAGE

The following table lists the product characteristics for the XLamp MC-E LED package.

Characteristics	Unit	Minimum	Typical	Maximum
Thermal Resistance, junction to solder point - white	°C/W		3	
Thermal Resistance, junction to solder point - color	°C/W		4	
Viewing Angle (FWHM) - white	degrees		110	
Viewing Angle (FWHM) - color	degrees		115	
ESD withstand voltage (HBM per Mil-Std-883D)	V			8000
LED Junction Temperature	°C			150

CHARACTERISTICS - PER LED DIE (WHITE, EASYWHITE, DYNAMIC WHITE)

The following table lists the product characteristics of each individual LED die within the XLamp MC-E White LED package.

Characteristics	Unit	Minimum	Typical	Maximum
Temperature Coefficient of Voltage	mV/°C		-4	
DC Forward Current	mA			700
Reverse Voltage	V			5
Forward Voltage (@ 350 mA)	V		3.1	3.9
Forward Voltage (@ 700 mA)	V		3.4	

CHARACTERISTICS - PER LED DIE (COLOR)

The following table lists the product characteristics for each LED die within the XLamp MC-E Color LED package.

Characteristics	Unit		Red	Green	Blue	White
Temperature Coefficient of Voltage	mV/°C	Typical	-2	-4	-4	-4
DC Forward Current	mA	Maximum	700	700	700	700
Reverse Voltage	V	Maximum	5	5	5	5
Forward Voltage (@ 350 mA)	V	Typical	2.1	3.4	3.2	3.1
		Maximum	2.5	3.9	3.9	3.9
Forward Voltage (@ 700 mA)	V	Typical	2.3	3.7	3.5	3.5

Copyright © 2008-2014 Cree, Inc. All rights reserved. The information in this document is subject to change without notice. Cree®v, the Cree logo, XLamp® and EasyWhite® are registered trademarks of Cree, Inc.

FLUX CHARACTERISTICS - WHITE, DYNAMIC WHITE, COLOR (T_J = 25 °C)

The following tables provide several base order codes for XLamp MC-E. It is important to note that the base order codes listed here are a subset of the total available order codes for the product family. For more order codes, as well as a complete description of the order-code nomenclature, please consult the XLamp MC-E Binning and Labeling document.

Part	Color	CCT / Dominant Wavelength Range		Base order codes Min. Luminous Flux @ 350 mA*		Order Code
		Min.	Max.	Group	Flux (lm)	
White	Cool White	5000 K	10,000 K	K	370	MCE4WT-A2-0000-000K01
				M	430	MCE4WT-A2-0000-000M01
	Neutral White	3700 K	5000 K	J	320	MCE4WT-A2-0000-000JE4
				K	370	MCE4WT-A2-0000-000KE4
	Warm White	2600 K	3700 K	G	240	MCE4WT-A2-0000-000GE7
				H	280	MCE4WT-A2-0000-000HE7
				J	320	MCE4WT-A2-0000-000JE7
Dynamic White	2 cool-white die	6500 K		K	100	MCEDWT-A1-0000-0000A1001
	2 warm-white die	2700 K		G	70	
	2 cool-white die	6000 K		K	100	MCEDWT-A1-0000-0000A1002
	2 warm-white die	2700 K		G	70	
Color	Red	620 nm	630 nm	A5	30.6	MCE4CT-A2-0000-00A5AAAA1
	Green	520 nm	535 nm		67.2	
	Blue	450 nm	465 nm		8.2	
	Cool White	5700 K	7000 K		100	
	Red	620 nm	630 nm	A4	30.6	MCE4CT-A2-0000-00A4AAAB1
	Green	520 nm	535 nm		67.2	
	Blue	450 nm	465 nm		8.2	
	Neutral White	3700 K	4300 K		80	

Notes:

- Cree maintains a tolerance of ±7% on flux and power measurements, ±0.005 on chromaticity (CCx, CCy) measurements, ±2 on CRI measurements and ± 1 nm on dominant wavelength measurements.
- Typical CRI for cool white and neutral white (3700 K - 10,000 K CCT) is 75.
- Typical CRI for warm white (2600 K - 3700 K CCT) is 80.
- Flux and chromaticity are measured with each LED die connected to independent drive circuits at 350 mA. The flux and chromaticity of XLamp MC-E White are measured with all LEDs lit simultaneously. The flux and color of each LED in XLamp MC-E Dynamic White and MC-E Color are measured individually.

Copyright © 2008-2014 Cree, Inc. All rights reserved. The information in this document is subject to change without notice. Cree®v, the Cree logo, XLamp® and EasyWhite® are registered trademarks of Cree, Inc.

FLUX CHARACTERISTICS - EASYWHITE MC-E LEDS (T_J = 25 °C)

The following table provides order codes for XLamp MC-E EasyWhite LEDs. For a complete description of the order-code nomenclature, please consult the XLamp MC-E Binning and Labeling document.

Color	CCT Range	Base Order Codes Min. Luminous Flux @ 350 mA, 25 ° C		2-Step Order Code		4-Step Order Code	
		Group	Flux (lm)	Chromaticity Region		Chromaticity Region	
Standard CRI EasyWhite	4000 K	K	370	40H	MCEEZW-A1-0000-0000K040H	40F	MCEEZW-A1-0000-0000K040F
		J	320		MCEEZW-A1-0000-0000J040H		MCEEZW-A1-0000-0000J040F
	3500 K	J	320	35H	MCEEZW-A1-0000-0000J035H	35F	MCEEZW-A1-0000-0000J035F
		H	280		MCEEZW-A1-0000-0000H035H		MCEEZW-A1-0000-0000H035F
	3000 K	J	320	30H	MCEEZW-A1-0000-0000J030H	30F	MCEEZW-A1-0000-0000J030F
		H	280		MCEEZW-A1-0000-0000H030H		MCEEZW-A1-0000-0000H030F
	2700 K	J	320	27H	MCEEZW-A1-0000-0000J027H	27F	MCEEZW-A1-0000-0000J027F
		H	280		MCEEZW-A1-0000-0000H027H		MCEEZW-A1-0000-0000H027F
80-CRI Minimum EasyWhite	4000 K	K	370	40H	MCEEZW-H1-0000-0000K040H	40F	MCEEZW-H1-0000-0000K040F
		J	320		MCEEZW-H1-0000-0000J040H		MCEEZW-H1-0000-0000J040F
	3500 K	J	320	35H	MCEEZW-H1-0000-0000J035H	35F	MCEEZW-H1-0000-0000J035F
		H	280		MCEEZW-H1-0000-0000H035H		MCEEZW-H1-0000-0000H035F
	3000 K	J	320	30H	MCEEZW-H1-0000-0000J030H	30F	MCEEZW-H1-0000-0000J030F
		H	280		MCEEZW-H1-0000-0000H030H		MCEEZW-H1-0000-0000H030F
	2700 K	J	320	27H	MCEEZW-H1-0000-0000J027H	27F	MCEEZW-H1-0000-0000J027F
		H	280		MCEEZW-H1-0000-0000H027H		MCEEZW-H1-0000-0000H027F
85-CRI Minimum EasyWhite	3000 K	H	280	30H	MCEEZW-P1-0000-0000H030H	30F	MCEEZW-P1-0000-0000H030F
		G	240		MCEEZW-P1-0000-0000G030H		MCEEZW-P1-0000-0000G030F
	2700 K	H	280	27H	MCEEZW-P1-0000-0000H027H	27F	MCEEZW-P1-0000-0000H027F
		G	240		MCEEZW-P1-0000-0000G027H		MCEEZW-P1-0000-0000G027F

Notes:

- For Standard CRI parts, the typical CRI is 80 for 4000 and 3500 K CCT parts and typical CRI is 82 for 3000 and 2700 K CCT.
- Cree maintains a tolerance of ±7% on flux and power measurements, ±0.005 on chromaticity (CCx, CCy) measurements and ±2 on CRI measurements.
- Flux and chromaticity are measured with each LED die connected to independent drive circuits at 350 mA and with all LEDs lit simultaneously.

Copyright © 2008-2014 Cree, Inc. All rights reserved. The information in this document is subject to change without notice. Cree®v, the Cree logo, XLamp® and EasyWhite® are registered trademarks of Cree, Inc.

RELATIVE SPECTRAL POWER DISTRIBUTION (I_F = 350 mA PER LED) - WHITE

The following graph represents typical spectral output of the XLamp MC-E White LED with all four LEDs on simultaneously.

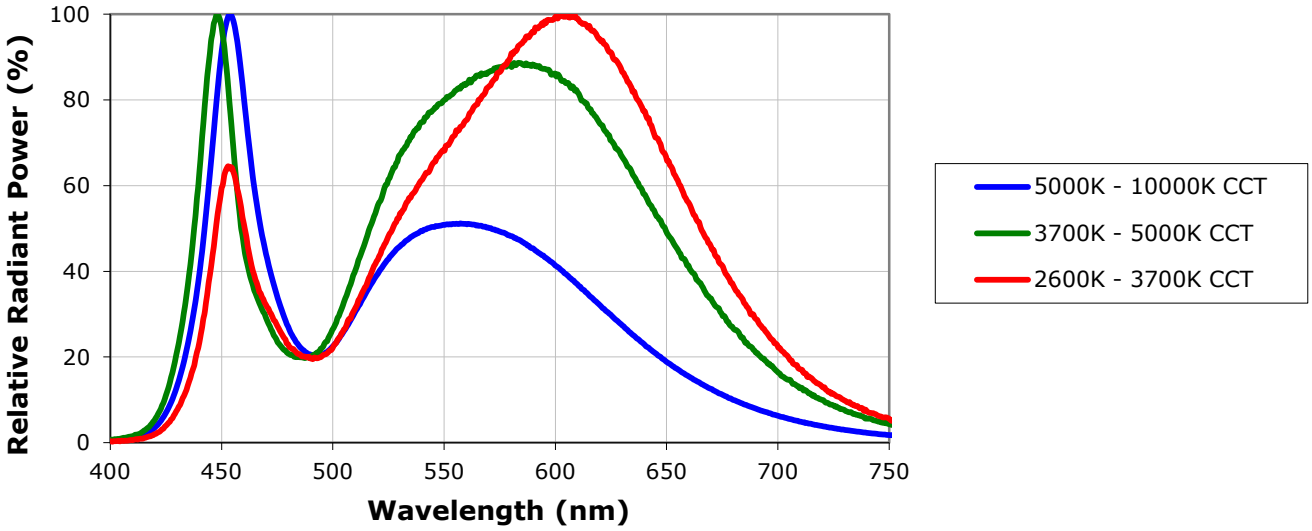

RELATIVE SPECTRAL POWER DISTRIBUTION (I_F = 350 mA PER LED) - COLOR

The following graph represents typical spectral output of the XLamp MC-E Color LED with all four LEDs on simultaneously.

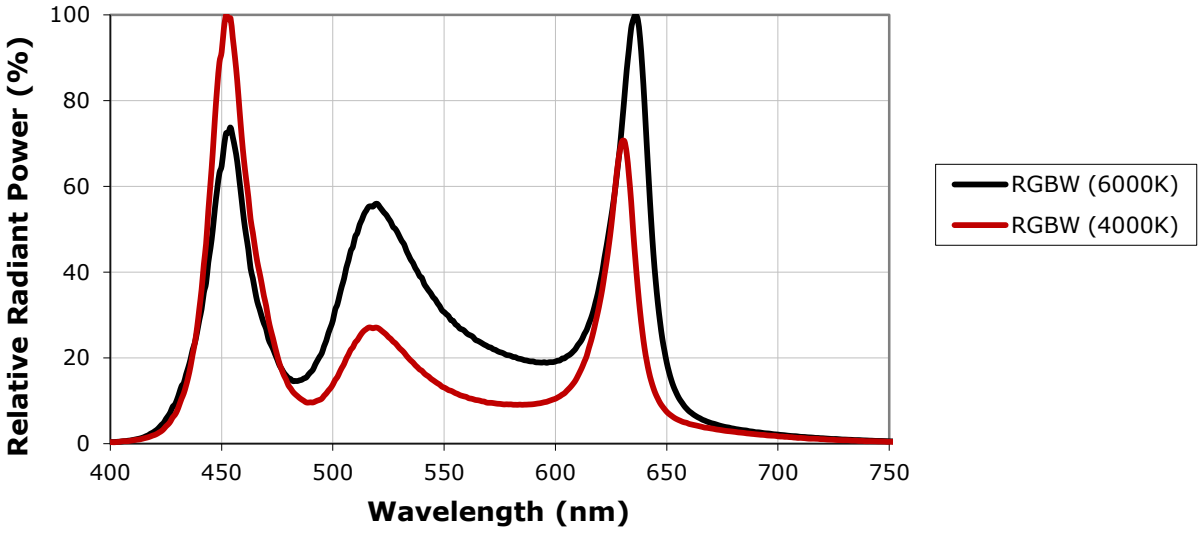

Copyright © 2008-2014 Cree, Inc. All rights reserved. The information in this document is subject to change without notice. Cree®v, the Cree logo, XLamp® and EasyWhite® are registered trademarks of Cree, Inc.

RELATIVE SPECTRAL POWER DISTRIBUTION (I_F = 350 mA PER LED) - COLOR (CONTINUED)

The following graph represents typical spectral output of the XLamp MC-E Color LED with each LED on independently.

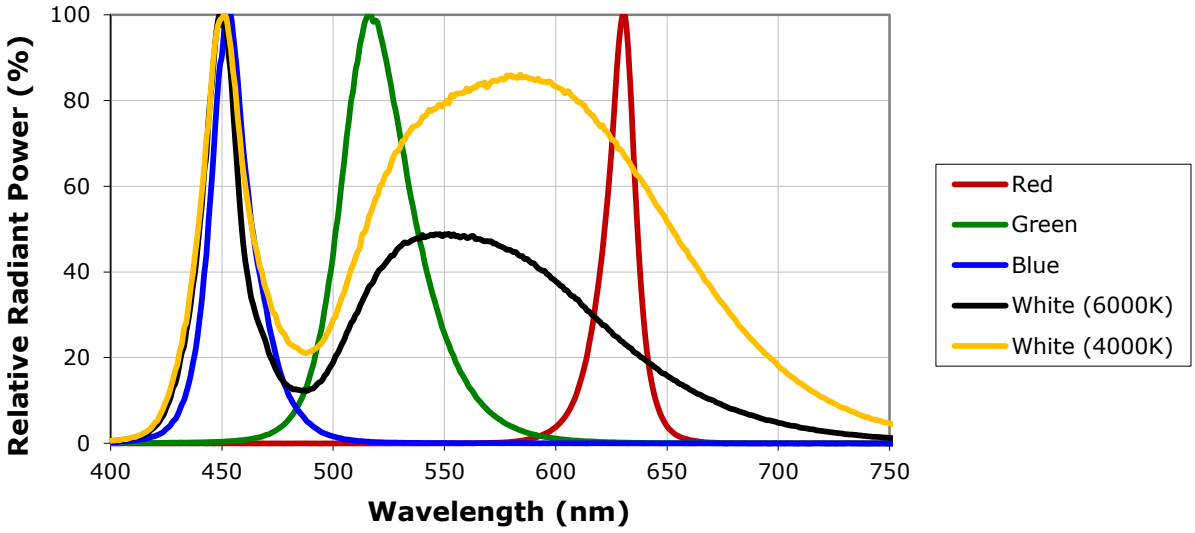

RELATIVE FLUX OUTPUT VS JUNCTION TEMPERATURE (I_F = 350 mA)

The following graph represents typical performance of each LED die in the XLamp MC-E LED.

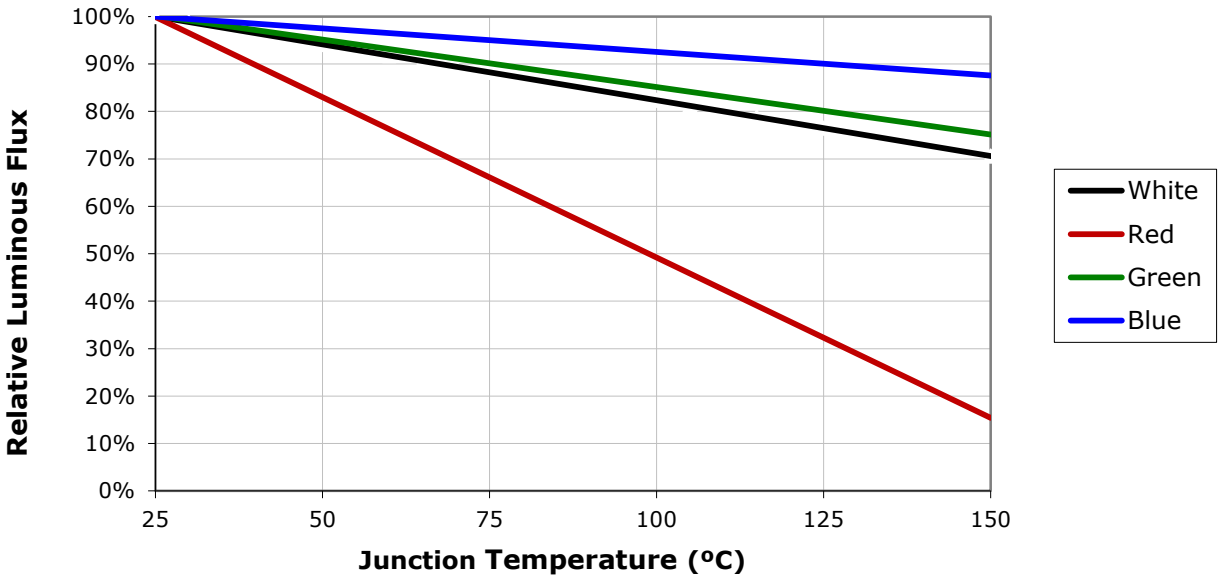

Copyright © 2008-2014 Cree, Inc. All rights reserved. The information in this document is subject to change without notice. Cree®v, the Cree logo, XLamp® and EasyWhite® are registered trademarks of Cree, Inc.

ELECTRICAL CHARACTERISTICS (T_J = 25 °C)

The following graph represents typical performance of each LED die in the XLamp MC-E LED.

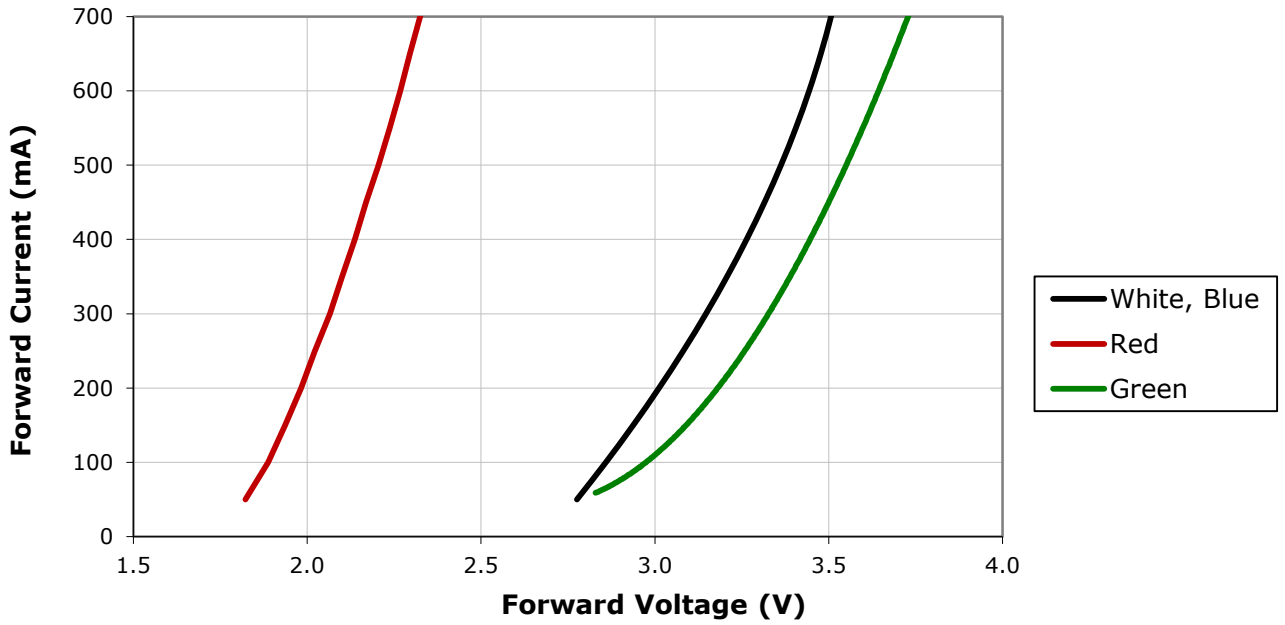

RELATIVE INTENSITY VS. CURRENT (T_J = 25 °C)

The following graph represents typical performance of each LED die in the XLamp MC-E LED.

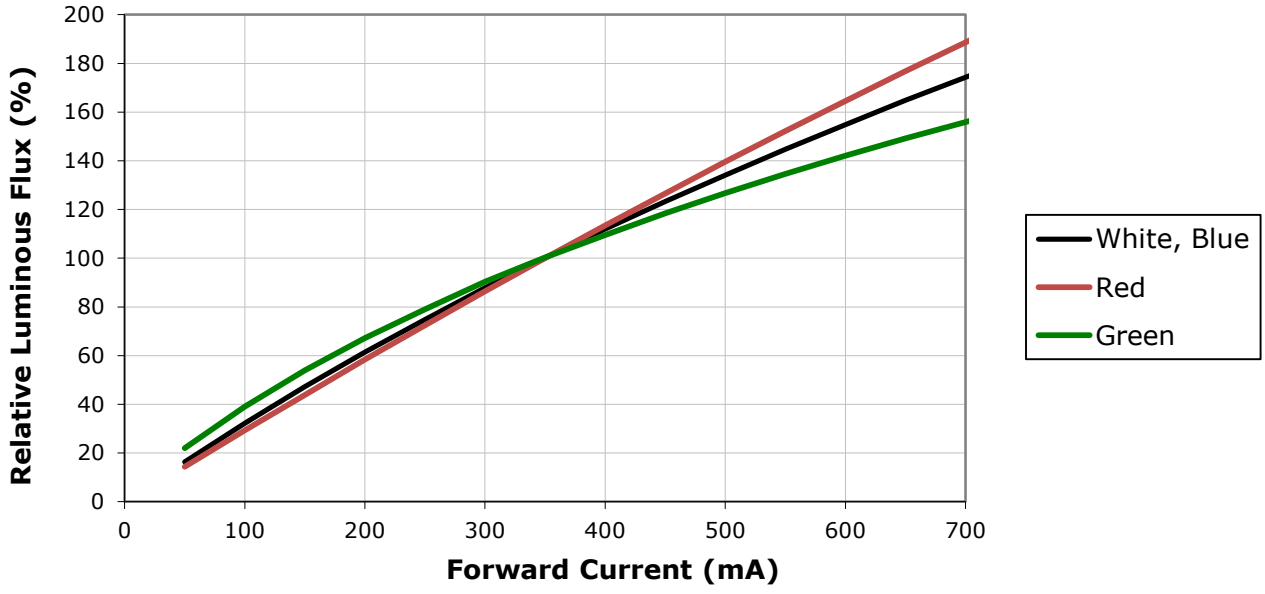

Copyright © 2008-2014 Cree, Inc. All rights reserved. The information in this document is subject to change without notice. Cree®v, the Cree logo, XLamp® and EasyWhite® are registered trademarks of Cree, Inc.

TYPICAL SPATIAL RADIATION PATTERN

The following graph represents typical output of the XLamp MC-E LED with all four LEDs on simultaneously.

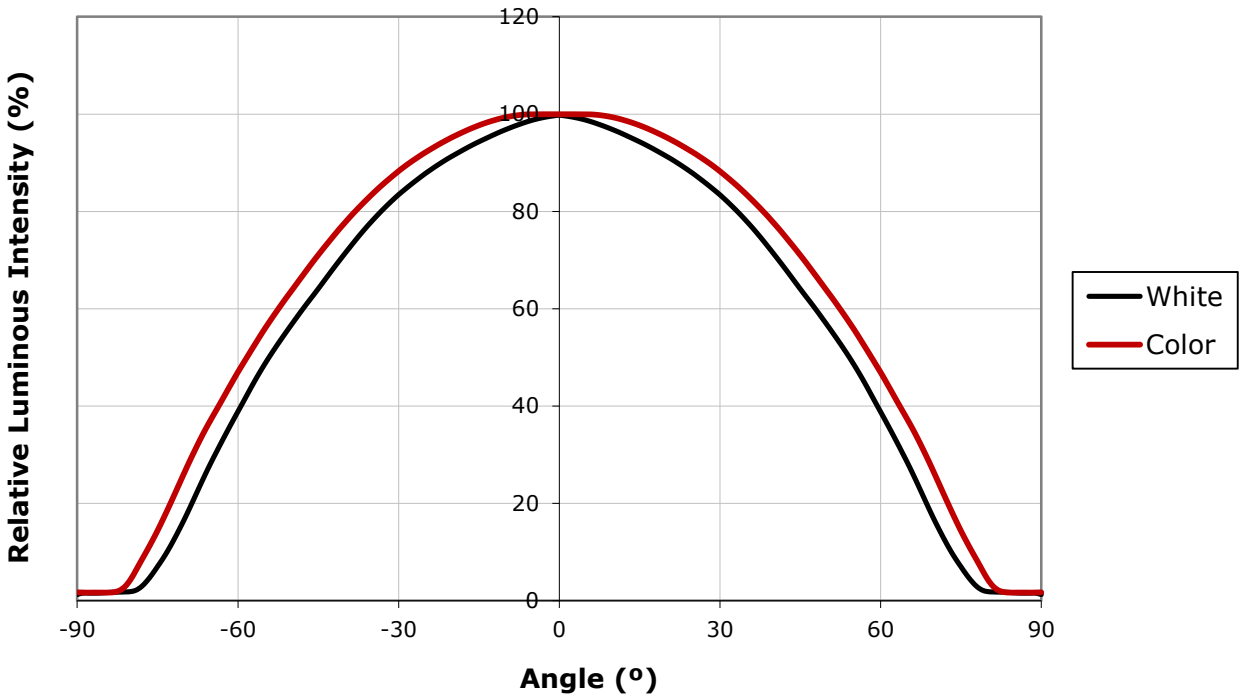

Copyright © 2008-2014 Cree, Inc. All rights reserved. The information in this document is subject to change without notice. Cree®v, the Cree logo, XLamp® and EasyWhite® are registered trademarks of Cree, Inc.

REFLOW SOLDERING CHARACTERISTICS

In testing, Cree has found XLamp MC-E LEDs to be compatible with JEDEC J-STD-020C, using the parameters listed below. As a general guideline, Cree recommends that users follow the recommended soldering profile provided by the manufacturer of solder paste used.

Note that this general guideline may not apply to all PCB designs and configurations of reflow soldering equipment.

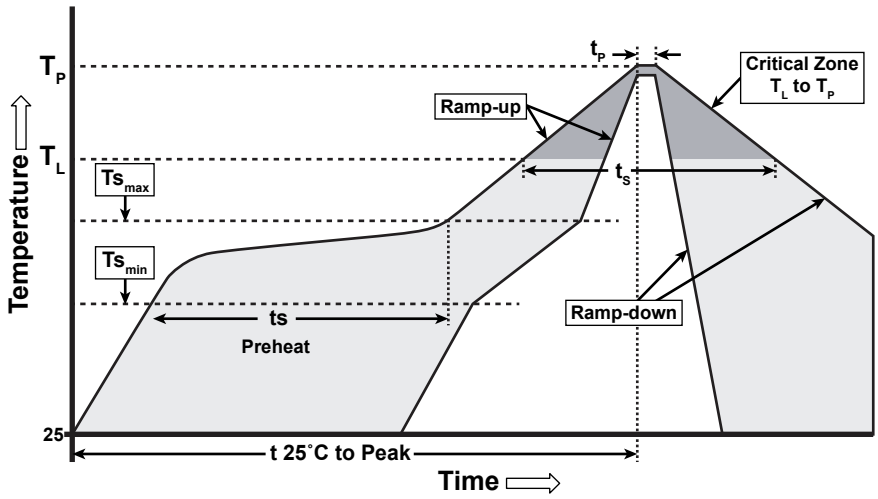

IPC/JEDEC J-STD-020C

Profile Feature	Lead-Based Solder	Lead-Free Solder
Average Ramp-Up Rate (Ts_{max} to Tp)	3 °C/second max.	3 °C/second max.
Preheat: Temperature Min (Ts_{min})	100 °C	150 °C
Preheat: Temperature Max (Ts_{max})	150 °C	200 °C
Preheat: Time (ts_{min} to ts_{max})	60-120 seconds	60-180 seconds
Time Maintained Above: Temperature (T_L)	183 °C	217°C
Time Maintained Above: Time (t_L)	60-150 seconds	60-150 seconds
Peak/Classification Temperature (Tp)	215 °C	260 °C
Time Within 5 °C of Actual Peak Temperature (tp)	10-30 seconds	20-40 seconds
Ramp-Down Rate	6 °C/second max.	6 °C/second max.
Time 25 °C to Peak Temperature	6 minutes max.	8 minutes max.

Note: All temperatures refer to topside of the package, measured on the package body surface.

Copyright © 2008-2014 Cree, Inc. All rights reserved. The information in this document is subject to change without notice. Cree®v, the Cree logo, XLamp® and EasyWhite® are registered trademarks of Cree, Inc.

NOTES

Lumen Maintenance Projections

Cree now uses standardized IES LM-80-08 and TM-21-11 methods for collecting long-term data and extrapolating LED lumen maintenance. For information on the specific LM-80 data sets available for this LED, refer to the public LM-80 results document at www.cree.com/xlamp_app_notes/LM80_results.

Moisture Sensitivity

XLamp MC-E LEDs are shipped in sealed, moisture-barrier bags (MBB) designed for long shelf life. If XLamp MC-E LEDs are exposed to moist environments after opening the MBB packaging but before soldering, damage to the LED may occur during the soldering operation. The derating table at right defines the maximum exposure time (in days) for an XLamp MC-E LED in the listed humidity and temperature conditions. LEDs with exposure time longer than the time specified below must be baked according to the baking conditions listed here.

Temperature	Maximum Percent Relative Humidity						
	30%	40%	50%	60%	70%	80%	90%
30 ºC	9	5	4	3	1	1	1
25 ºC	12	7	5	4	2	1	1
20 ºC	17	9	7	6	2	2	1

Cree recommends keeping XLamp LEDs in their sealed moisture-barrier packaging until immediately prior to use. Cree also recommends returning any unused LEDs to the resealable moisture-barrier bag and closing the bag immediately after use.

Baking Conditions

It is not necessary to bake all XLamp MC-E LEDs. Only the LEDs that meet all of the following criteria must be baked:

- LEDs that have been removed from the original MBB packaging.
- LEDs that have been exposed to a humid environment longer than listed in the Moisture Sensitivity section above.
- LEDs that have not been soldered.

LEDs should be baked at 80 ºC for 24 hours. LEDs may be baked on the original reels. Remove LEDs from MBB packaging before baking. Do not bake parts at temperatures higher than 80 ºC. This baking operation resets the exposure time as defined in the Moisture Sensitivity section above.

Storage Conditions

XLamp MC-E LEDs that have been removed from original MBB packaging but not soldered yet should be stored in a room or cabinet that will maintain an atmosphere of 25 ± 5 ºC and no greater than 10% RH. For LEDs stored in these conditions, storage time does not add to exposure time as defined in the above Moisture Sensitivity section.

RoHS Compliance

The levels of RoHS restricted materials in this product are below the maximum concentration values (also referred to as the threshold limits) permitted for such substances, or are used in an exempted application, in accordance with EU Directive 2011/65/EC (RoHS2), as implemented January 2, 2013. RoHS Declarations for this product can be obtained from your Cree representative or from the Product Ecology section of www.cree.com.

Copyright © 2008-2014 Cree, Inc. All rights reserved. The information in this document is subject to change without notice. Cree®v, the Cree logo, XLamp® and EasyWhite® are registered trademarks of Cree, Inc.

REACh Compliance

REACh substances of high concern (SVHCs) information is available for this product. Since the European Chemical Agency (ECHA) has published notice of their intent to frequently revise the SVHC listing for the foreseeable future, please contact a Cree representative to insure you get the most up-to-date REACh SVHC Declaration. REACh banned substance information (REACh Article 67) is also available upon request.

UL Recognized Component

Level 1 enclosure consideration. The LED package or a portion thereof has not been investigated as a fire enclosure or a fire and electrical enclosure per ANSI/UL 8750.

Vision Advisory Claim

WARNING. Do not look at exposed LED lamps in operation. Eye injury can result. For more information about LEDs and eye safety, please refer to the Cree LED Eye Safety Application Note (www.cree.com/xlamp_app_notes/led_eye_safety).

Copyright © 2008-2014 Cree, Inc. All rights reserved. The information in this document is subject to change without notice. Cree®v, the Cree logo, XLamp® and EasyWhite® are registered trademarks of Cree, Inc.

MECHANICAL DIMENSIONS

All measurements are ±.1mm unless otherwise indicated.

Top View

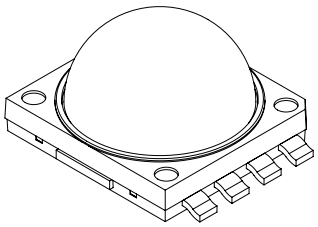

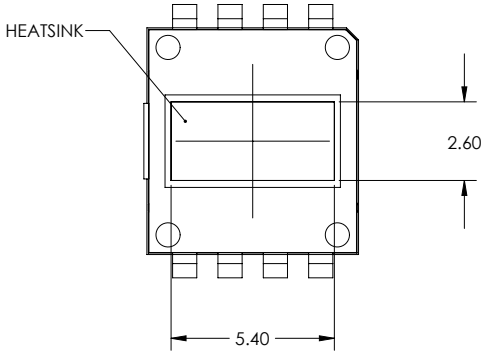

Bottom View

Side View

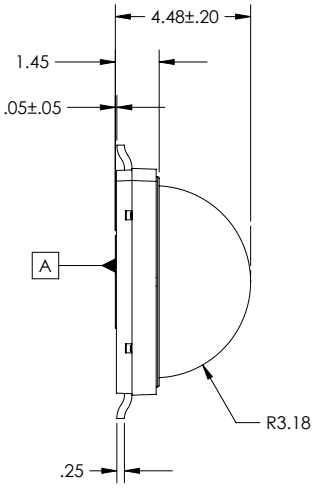

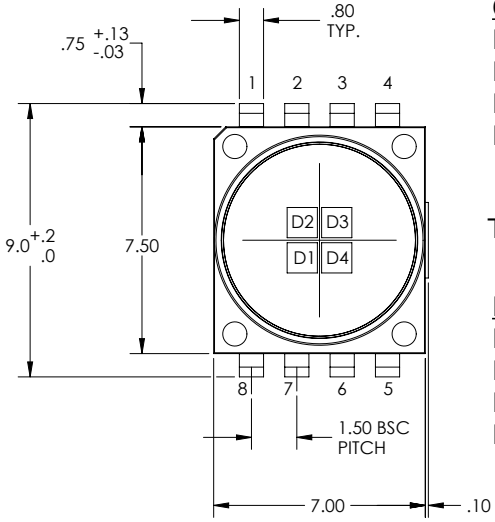

Color
D1: Red
D2: Green
D3: Blue
D4: White

Top View

Dynamic White
D1: Cool White
D2: Warm White
D3: Cool White
D4: Warm White

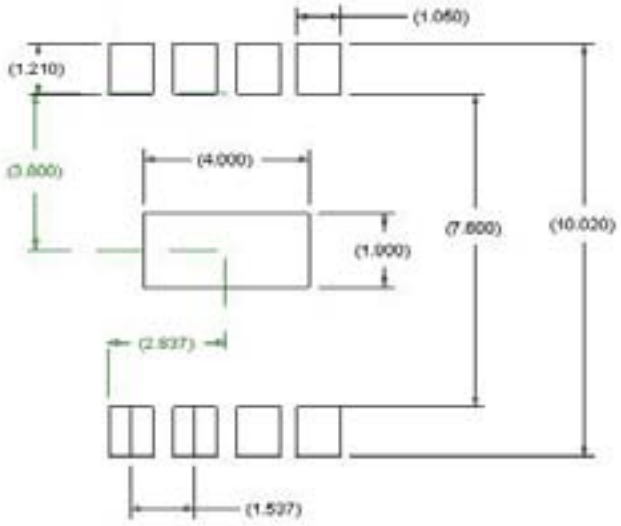

Recommended PCB Solder Pad

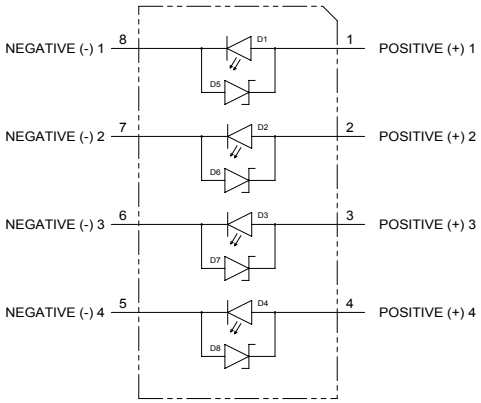

Copyright © 2008-2014 Cree, Inc. All rights reserved. The information in this document is subject to change without notice. Cree®v, the Cree logo, XLamp® and EasyWhite® are registered trademarks of Cree, Inc.

TAPE AND REEL

All Cree carrier tapes conform to EIA-481D, Automated Component Handling Systems Standard.

All measurements in mm.

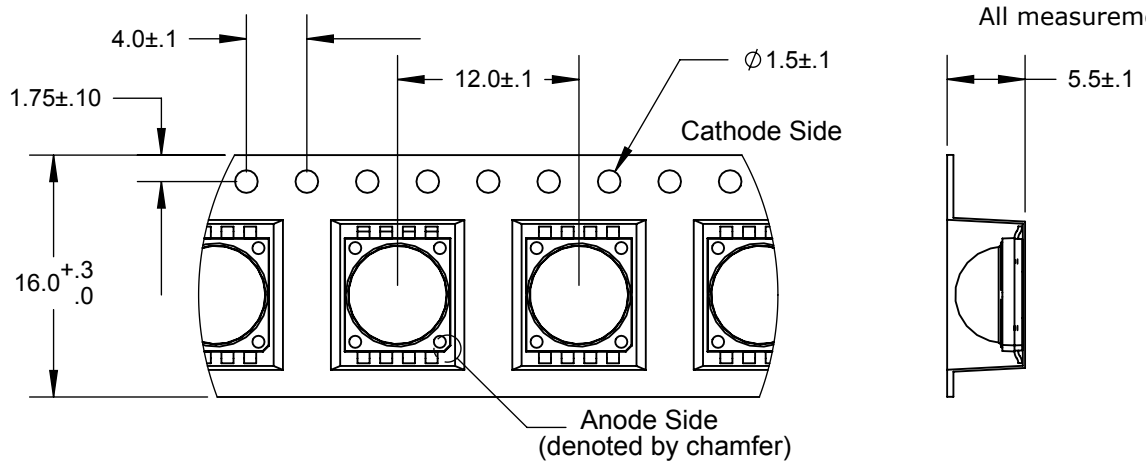

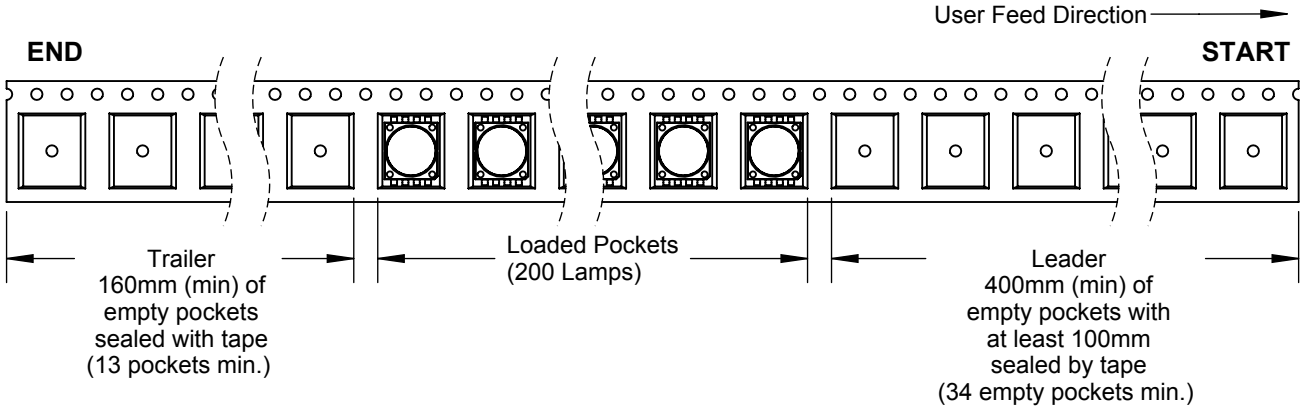

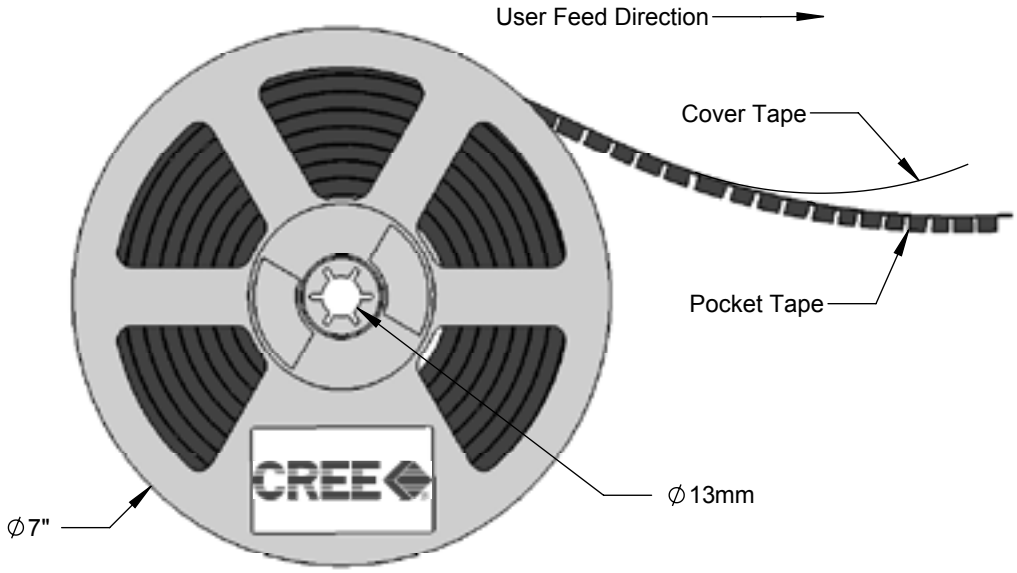

Copyright © 2008-2014 Cree, Inc. All rights reserved. The information in this document is subject to change without notice. Cree®v, the Cree logo, XLamp® and EasyWhite® are registered trademarks of Cree, Inc.

PACKAGING

Unpackaged Reel

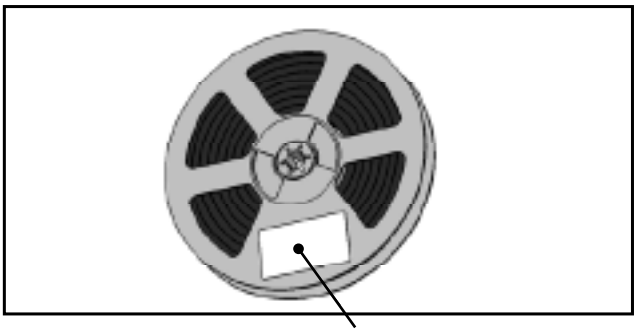

Packaged Reel

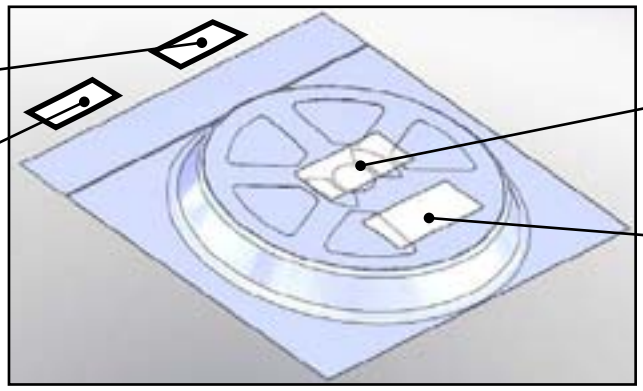

Boxed Reel

Copyright © 2008-2014 Cree, Inc. All rights reserved. The information in this document is subject to change without notice. Cree®v, the Cree logo, XLamp® and EasyWhite® are registered trademarks of Cree, Inc.