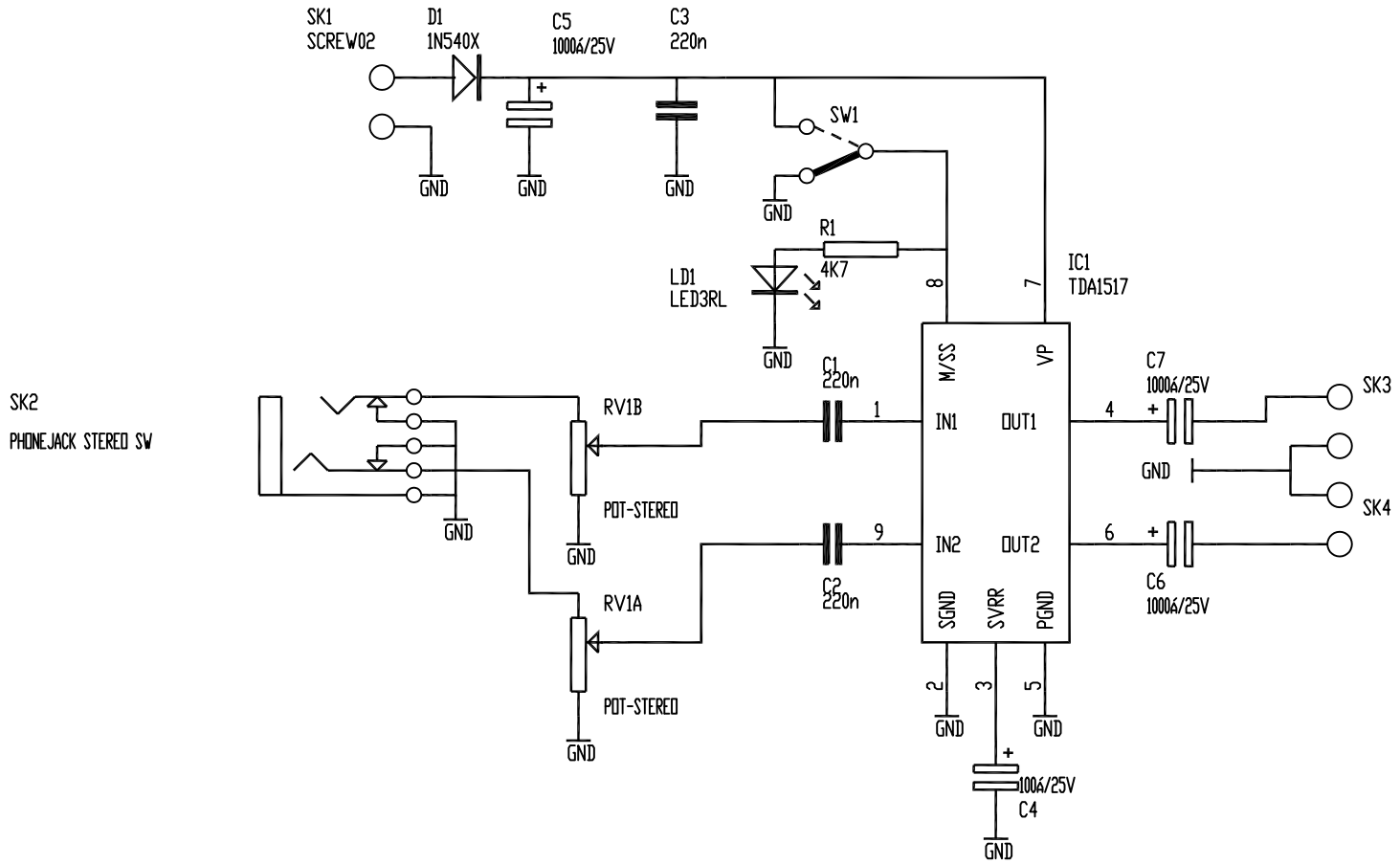
SK1
SCREW02
D1
1N540X
C5
1000µ/25V
C3
220n
SW1
GND
R1
4K7
LD1
LED3RL
IC1
TDA1517
M/SS
VP
IN1
OUT1
IN2
OUT2
SGND
SVRR
PGND
C1
220n
C2
220n
C7
1000µ/25V
C6
1000µ/25V
C4
100µ/25V
SK2
PHONEJACK STEREO SW
RV1B
RV1A
POT-STEREO
SK3
SK4