TRIAD MAGNETICS

Audio Transformer

Data/Voice Coupling

T Y - 3 0 2 P

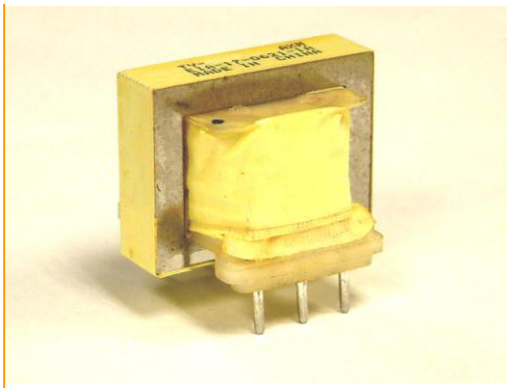

Description:
The TY series transformers are used for a variety of applications including impedance matching, isolation, repeat coil, line balancing, bridging and hybrid circuit.

Electrical Specifications at 25º C:

Impedance (Ohms)		Max. DC Current (mA)	Typ. Insertion Loss (dB)	Typ. Return Loss (dB)	Trans-Hybrid Loss (dB)
Pri	Sec				
600 (4W)	600/600	0	.65	32	55

Designed to meet FCC Part 68

Longitudinal Balance: (FCC 68.310) – 60 dB min. 200 – 1000 Hz
45 dB min. 1000 – 4000 Hz

Dielectric Strength: (FCC 68.304) – 1500VAC

Power Level: -45 dBm to +7 dBm

Frequency Range: 300 to 3500 Hz

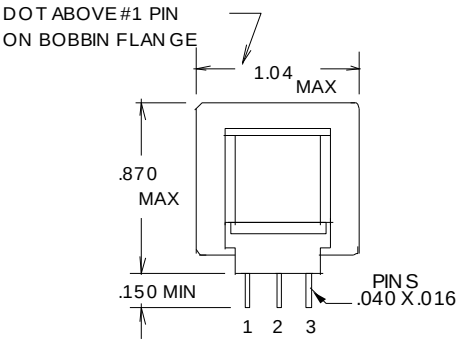

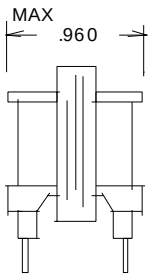

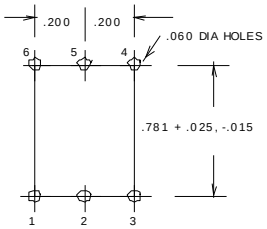

Electrical Schematic:

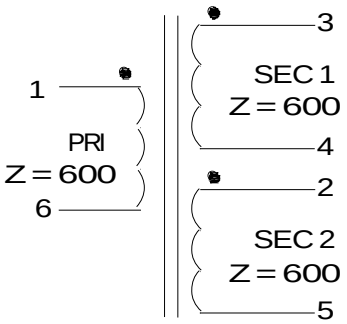

BOTH SECONDARIES MUST BE LOADED FOR IMPEDANCE SPECIFICATIONS TO BE ACCURATE.

RoHS Compliance: As of manufacturing date February 2005, all standard products meet the requirements of 2011/65/EU, known as the RoHS initiative.

*Upon printing, this document is considered "uncontrolled".Please contact Triad Magnetics website for the most current version.

web:www.TriadMagnetics.com
Phone 951-277-0757
Fax 951-277-2757

460 Harley Knox Blvd.
Perris, California 92571

Publish Date: December 4, 2013