POWER TRANSFORMER
CHASSIS MOUNT :
TOROIDAL WORLD SERIES

VPT24-1040

Electrical Specifications (@25C)

1. Maximum Power: 25VA
2. Input Voltage: **Series:** 230VAC, 50/60Hz
   Parallel: 115VAC, 50/60Hz
3. Output Voltage: **Series:** 24VAC CT @ 1.04A
   Parallel: 12.0VAC @ 2.08A
4. Voltage Regulation: 12% TYP from full load to no load
5. Temperature Rise: 30°C TYP
6. Hipot: 4000VAC, Primary to Secondary
7. Efficiency: 87% TYP. @ full load

Construction:

The toroidal construction inherently helps reduce stray fields, increases efficiency and minimizes size compared to traditional EI transformers. Built with Class B (130°) insulation system.

Safety:

World Series Transformers are designed and manufactured to meet most International Safety agency standards.

Agency File:

UL: File E122529, UL 506
CE: EN 61558-1:2005, EN 61558-2-6:1995, Low Voltage Directive (LVD)
EN 6-000-6-6:2001+A11:2004, EN 55014-1:2000+A1:2001+A2:2002, EN 6100-6-1:2001, EN 55014-2:1997+A1:2001, Electromagnetic Compatibility (EMC)

Dimensions (mm):

H*	I.D.	O.D.
32.0	22.0	71.0

*Add 3mm to the height for mounting hardware
Weight: 0.4Kg

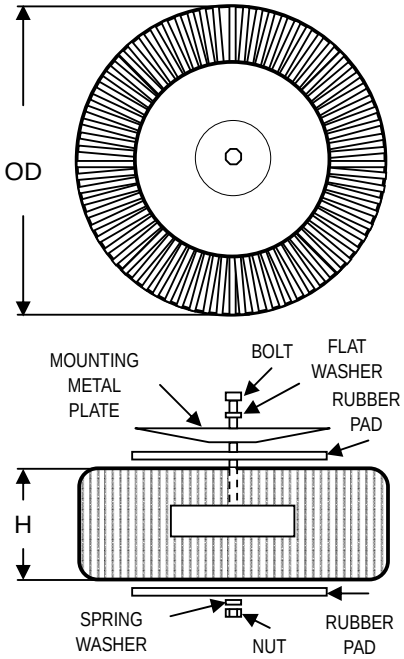

Mounting:

Transformer is provided with one metal mounting plate, two rubber pads, M5 x 40mm bolt, nut, spring and flat washer.

Connections:

Transformer is provided with 8" (200mm) long, 0.25" (6mm) stripped and tinned, stranded UL 1015 lead wire.

Input[1]: Series – BLUE and BROWN, Jumper GRAY to VIOLET
Parallel – BLUE and BROWN, Jumper BLUE to VIOLET, GRAY to BROWN
Output[1]: Series – BLACK and YELLOW, Jumper RED to ORANGE
Parallel – BLACK and YELLOW, Jumper BLACK to ORANGE, RED to YELLOW

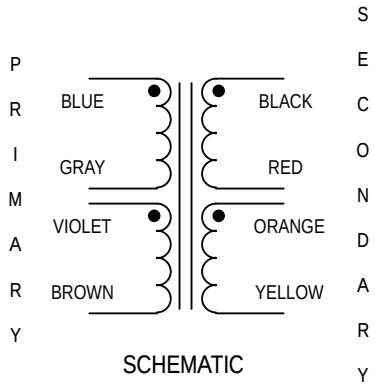

SCHEMATIC

RoHS Compliance: As of manufacturing date February 2005, all standard products meet the requirements of 2011/65/EU, known as the RoHS initiative.

* Upon printing, this document is considered "uncontrolled". Please contact Triad Magnetics' website for the most current version.

[1] Primary and secondary windings are designed to be connected in series or parallel. Windings are not intended to be used independently.

Web: www.TriadMagnetics.com
Phone 951-277-0757
Fax 951-277-2757

460 Harley Knox Blvd.
Perris, California 92571

Publish Date: December 4, 2013