COMMENT:
ALL RIGHTS ARE RESERVED BY US FOR THIS DRAWING. WITHOUT OUR PRIOR CONSENT,
IT MAY NEITHER BE DUPLICATED NOR MADE AVAILABLE TO A THIRD PARTY,
AND IT ALSO MAY NOT BE IMPROPERLY USED BY TE RECEIVER, OR A THIRD PARTY.

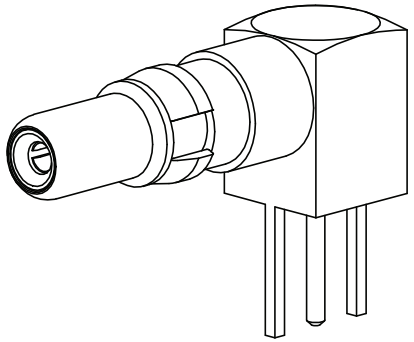

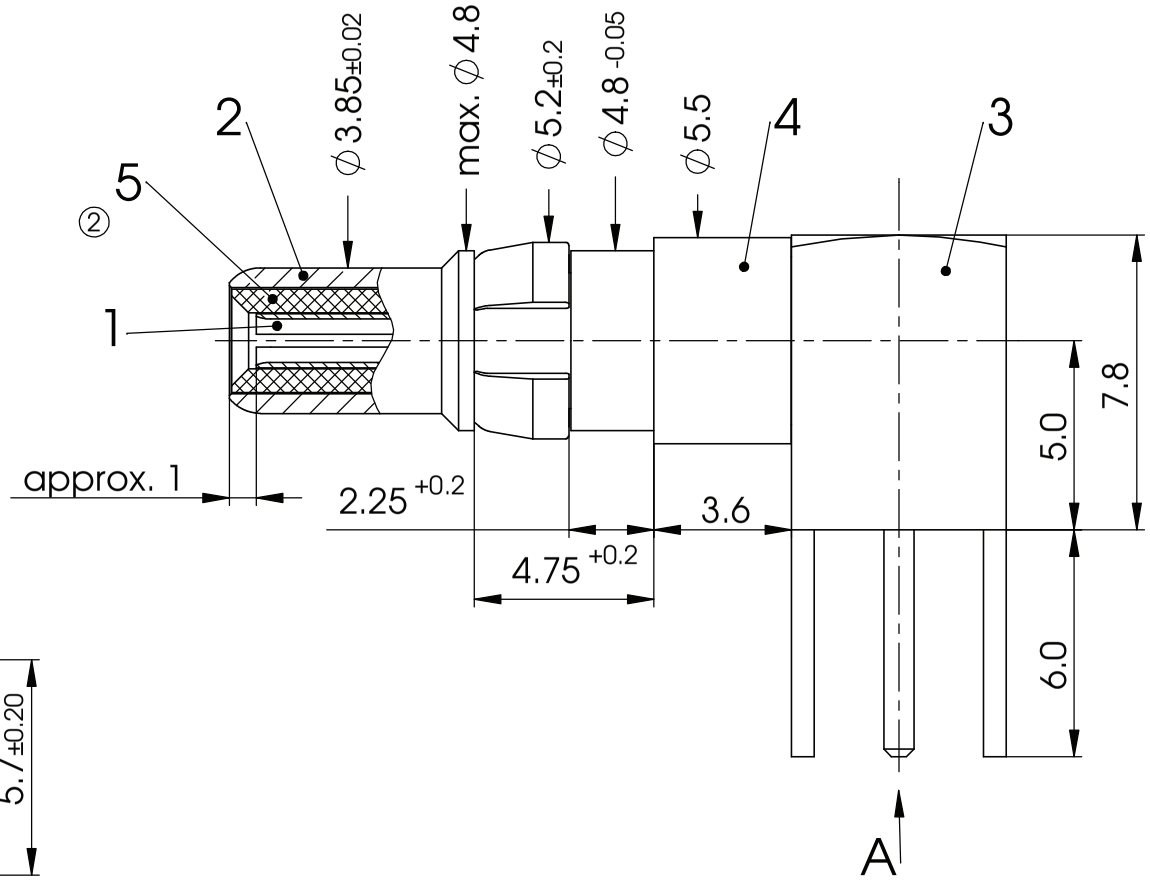

A

PCB-Layout

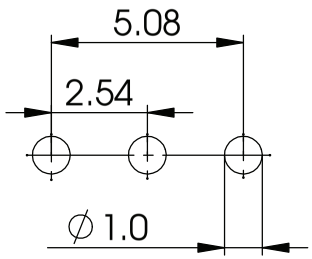

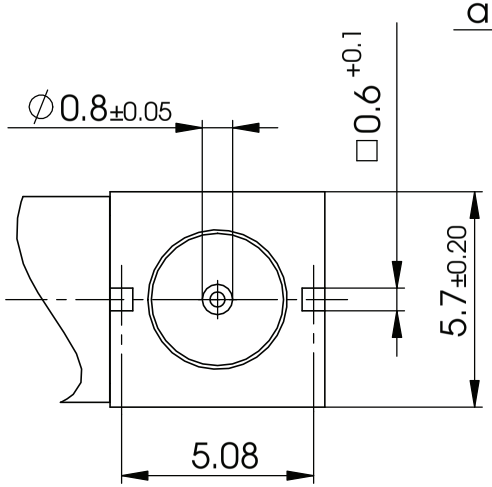

IMPEDANCE 50 Ohm			COAXIAL CONTACT	SCALE 5:1	CABLE ①
FOR D-SUB				DATE	NAME
DIMENSIONS IN MM			DRAWN	11-03-2003	D. Bocan
MATERIAL + FINISH SEE EXTRA SHEET			CHECKED	01-03-2006	erappenglitz
UNLESS OTHERWISE SPECIFIED DIMENSIONS FOR REFERENCE ONLY			FCT group www.fctgroup.com		PART NO. FME008P	REV. 2
2	01-03-2006	F82C307			
REV.	DATE	INDEX	ORIGINAL: DIN A4-DRAWING AS A FILE		REPLACEMENT FOR:	PAGE: 1/1