Agilent N8900 Series

Autoranging System DC Power Supplies

N8920A-N8924A (5 kW, 208 VAC)
N8925A-N8930A (10 kW, 208 VAC)
N8940A-N8944A (5 kW, 400 VAC)
N8945A-N8950A (10 kW, 400 VAC)

Data Sheet

- Autoranging output – does the job of multiple power supplies!
- 5 and 10 kW maximum output power
- Up to 1000 V and up to 340 A
- 9 different voltage, current, and power combinations available in 208 or 400 VAC (18 total models)
- Just the right amount of performance at just the right price
- Easily parallel units to create "one" power supply with up to 100 kW of power
- Built-in voltage and current measurement
- High power density, 10 kW in only 3U (5.25 inch/13.34 cm)
- Protection from over-voltage, over-current, and over-temperature
- LAN (LXI Core), USB, GPIB, and analog interfaces all standard

Family of Affordable, Autoranging System DC Power Supplies

The Agilent Technologies N8900 Series provides 5 and 10 kW autoranging, single-output programmable DC power for ATE applications that require just the right amount of performance at just the right price. The N8900 Series power supplies' autoranging output characteristic enables unprecedented flexibility by offering a wide range of voltage and current combinations at full power. Power supplies with "rectangular," or traditional, output characteristics provide full power at only one voltage and current combination. Just one N8900 does the job of multiple power supplies. It's like having many power supplies in one!

The N8900 Series provides stable output power, built-in voltage and current measurements, and autoranging output voltage and current from 80 to 1000 V and 20 to 340 A. These supplies offer many system-ready features like multiple standard I/O interfaces to simplify and accelerate test-system development and compact 3U design to save rack space. If more power is required, easily parallel multiple N8900 units to create "one" power supply with up to 100 kW of total output power. The built-in master/slave control enables programming as if it's just one big power supply; no need to program each supply individually.

Autoranging output – like having many power supplies in one!

Autoranging output – does the job of multiple power supplies

The N8900 power supplies' autoranging output characteristic makes it much more flexible than rectangular, or traditional, output characteristic power supplies because they expand the power curve, giving the user more voltage and current combinations in one power supply. It's like having many rectangular power supplies in one. For example, the 1000 V, 30 A, 10 kW model is capable of 1000 V and 10 A at 10 kW as well as 333.3 V and 30 A at 10 kW. If it were a rectangular output, the specifications would be 1000 V, 10 A, 10 kW. At 333.3 V it would only be able to output 3.3 kW, not the 10 kW of an autoranging output. Figures 1 and 2 show a graphical representation of this example.

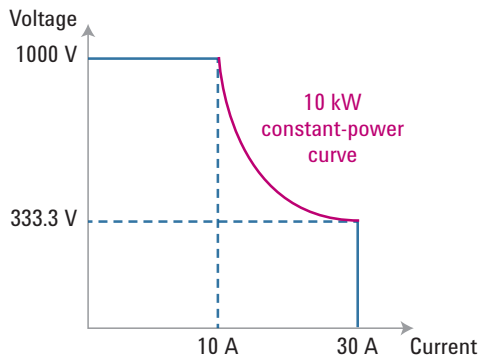

Figure 1. Autoranging output characteristic

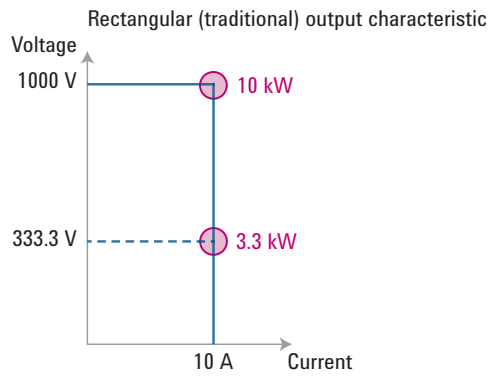

Figure 2. Rectangular output characteristic

Easy front-panel operation

Using the front panel controls, you have complete access to all of the N8900 features via the extensive menu system. You can either use the voltage and current knobs or enter your settings via the keypad. You can also set protection settings, power-on states, and other features. The output voltage, current, and power can be displayed simultaneously, and annunciators at the bottom of the display show power supply status and operating modes. You can lock the front panel controls to protect against accidental power-supply parameter changes.

Device protection

To safeguard your device, the N8900 Series power supplies provide over-temperature, over-current and over-voltage protection to shut down the power supply output when a fault condition occurs.

Simplify system connections

The N8900 Series power supplies comes standard with GPIB, Ethernet/LAN, USB 2.0, and analog interfaces giving you the flexibility to use your I/O interface of choice today and safeguard your test setup for the future. There is no need to worry whether or not you are choosing the right interface when they all come standard. The N8900 is fully compliant with the LXI Core specification.

Remote access and control

The built-in Web server provides remote access and control of the instrument via a standard browser. This control goes above and beyond the LXI specification, giving users the ability to monitor and control the instrument from anywhere. Using the Web browser, you can set up, monitor and operate the N8900 remotely.

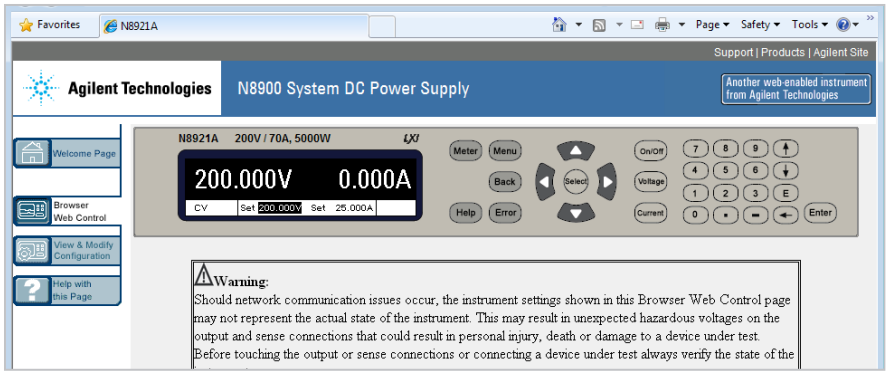

Figure 3. N8900 Series web graphical user interface for remote access and control of the power supply

Easy system integration and configuration

To simplify system development, the N8900 comes standard with IVI-COM drivers. The N8900 supports the easy-to-use SCPI (Standard Commands for Programmable Instruments).

Parallel operation for more power

Need more power, we've got you covered. Quickly create a master/slave setup for even more total output power. The N8900 Series power supplies give you the flexibility to easily connect in parallel up to ten identical units (same model number) for greater output current. The units can also be configured to look like "one" big power supply. (See Figure 4, page 4.) Series operation is not recommended.

Analog programming and monitoring

The output voltage and current can be programmed from zero to full-scale by an analog voltage signal from 0 to 5 V or 0 to 10 V. Each corresponding to 0 to 100% of full-scale. The measured output voltage and current can also be monitored in the same way.

AC input

The N8900 has 18 total models. Nine have 208 VAC inputs and the remaining 9 have 400 VAC inputs. This gives the N8900 the ability to be used anywhere in the world. Choose 208 VAC for regions such as the Americas and Japan or choose 400 VAC for regions such as Europe and Asia.

Performance specifications

All specifications pertain to >2% of rated voltage and >1% of rated current

	N8920A / N8940A	N8921A / N8941A	N8923A / N8943A	N8924A / N8944A	N8925A / N8945A	N8926A / N8946A	N8928A / N8948A	N8929A / N8949A	N8930A / N8950A
DC output ratings									
Voltage	80 V	200 V	500 V	750 V	80 V	200 V	500 V	750 V	1000 V
Current	170 A	70 A	30 A	20A	340 A	140 A	60 A	40 A	30 A
Power	5 kW	5 kW	5 kW	5 kW	10 kW	10 kW	10 kW	10 kW	10 kW
Output voltage ripple and noise									
CV p-p[1]	200 mV	375 mV / 300 mV	350 mV	800 mV	320 mV	375 mV / 300 mV	350 mV	800 mV	1600 mV
CV rms[2]	16 mV	40 mV	70 mV	200 mV	25 mV	40 mV	70 mV	200 mV	350 mV
Load effect (change from 0% to 100% of full load)									
Voltage	40 mV	100 mV	250 mV	375 mV	40 mV	100 mV	250 mV	375 mV	500 mV
Current	255 mA	105 mA	45 mA	30 mA	510 mA	210 mA	90 mA	60 mA	53 mA / 45 mA
Programming accuracy (23 °C ± 5 °C)									
Voltage	≤ 80 mV	≤ 200 mV	≤ 500 mV	≤ 750 mV	≤ 80 mV	≤ 200 mV	≤ 500 mV	≤ 750 mV	≤ 1.0 V
Current	≤ 340 mA	≤ 140 mA	≤ 60 mA	≤ 40 mA	≤ 680 mA	≤ 280 mA	≤ 120 mA	≤ 80 mA	≤ 60 mA
Measurement accuracy (23 °C ± 5 °C)									
Voltage	≤ 80 mV	≤ 200 mV	≤ 500 mV	≤ 750 mV	≤ 80 mV	≤ 200 mV	≤ 500 mV	≤ 750 mV	≤ 1.0 V
Current	≤ 340 mA	≤ 140 mA	≤ 60 mA	≤ 40 mA	≤ 680 mA	≤ 280 mA	≤ 120 mA	≤ 80 mA	≤ 60 mA
Load transient recovery time (time for output voltage to recover within 1% of its rated output for a load change from 10% to 90% of its rated output current)									
Time	≤ 1.5 ms								

Figure 4. Parallel operation for more power (cables not included)

1. 20 Hz to 20 MHz
2. 20 Hz to 300 kHz

Supplemental characteristics (typical)

	N8920A / N8940A	N8921A / N8941A	N8923A / N8943	N8924A / N8944A	N8925A / N8945A	N8926A / N8946A	N8928A / N8948A	N8929A / N8949A	N8930A / N8950A
Output response time: Time from 10% to 90%, or 90% to 10%, of total voltage excursion									
Up, full load[3]					≤ 30 ms				
Down, full load[3]					≤ 80 ms				
Down, no load	≤ 30 s	≤ 10 s	≤ 10 s	≤ 10 s	≤ 30 s	≤ 10 s	≤ 10 s	≤ 10 s	≤ 10 s
Command response time									
					< 25 ms				
Remote sense compensation									
Volts/load lead	2 V	5 V	10 V	18 V	2 V	5 V	10 V	18 V	22 V
Over-voltage protection									
Range	0 - 88 V	0 - 220 V	0 - 550 V	0 - 825 V	0 - 88 V	0 - 220 V	0 - 550 V	0 - 825 V	0 - 1100 V
Source effect (±10% of AC input rating)									
Voltage	16 mV	40 mV	100 mV	150 mV	16 mV	40 mV	100 mV	150 mV	200 mV
Curren	85 mA	35 mA	15 mA	10 mA	170 mA	70 mA	30 mA	20 mA	15 mA
Output current ripple and noise									
CC rms	80 mA	22 mA	16 mA	16 mA	160 mA	44 mA	32 mA	32 mA	22 mA
Programming resolution									
Voltage	4 mV	9 mV	21 mV	31 mV	4 mV	9 mV	21 mV	31 mV	41 mV
Current	7 mA	3 mA	2 mA	1 mA	14 mA	6 mA	3 mA	2 mA	2 mA
Measurement resolution									
Voltage	4 mV	9 mV	21 mV	31 mV	4 mV	9 mV	21 mV	31 mV	41 mV
Current	7 mA	3 mA	2 mA	1 mA	14 mA	6 mA	3 mA	2 mA	2 mA
Output terminal isolation (negative terminal to ground)									
					300 V				
Acoustic noise declaration									
Idle fan speed	55 dBA / 48 dBA				55 dBA / 51 dBA				
Max fan speed	76 dBA / 57 dBA				77 dBA / 62 dBA				
208 VAC input (N8920A - N8937A)									
Nominal input voltage					208 VAC				
Input range					Nominal ±10%				
Frequency					50/60 Hz				
Phase					3 phase				
Input current	2 x 32 A				2 x 32 A, 1 x 56 A				
Inrush current	41 A				97 A				
Power factor					> 0.99				
Efficiency	87.5%	90%	91%	90%	87.5%	89.5%	91%	90%	91%
400 VAC input (N8940A - N8957A)									
Nominal input voltage					400 VAC				
Input range					Nominal ±10%				
Frequency					50/60 Hz				
Phase					3 phase				
Input current	2 x 16 A				2 x 16 A, 1 x 28 A				
Inrush current	28A				49A				
Power factor					> 0.99				
Efficiency	91.5%	91.5%	93.5%	90%	89.5%	91.5%	91%	90%	93.5%

3. For purposes of output response time, full load occurs at the full range output voltage and the maximum output current available at the full output voltage.

Supplemental characteristics (typical) - all models

Supplemental characteristics	
Analog programming:	
Input range	Selectable: 0 to 5 V or 0 to 10 V
Accuracy	Specified accuracy + 0.2% of rating
Input impedance	150 kΩ
Referenced to:	Ground
Temperature coefficients: (after 30 minute warmup)	
Voltage	50 PPM/°C of rated output voltage
Current	50 PPM/°C of rated output current

Series operation not recommended	
Parallel operation	
Master-slave	Yes
Savable states	
Nonvolatile memory	10
Interface capabilities	
GPIB, USB 2.0, 10/100 LAN	SCPI - 1993, IEEE 488.2 compliant interface; Requires Agilent I/O Libraries 16.3 or later
LXI compliance	LXI Core 2011 compliant
Environmental conditions	
Environment	Indoor use, installation category II (AC input), pollution degree 2
Operating temp	0 °C to 45 °C
Storage temp	–20 °C to 70 °C
Operating humidity	80%
Storage humidity	80%
Altitude	2000 m
Built-in Web server	Requires Internet Explorer 7+, Firefox, or Chrome. Additionally requires Java plug-in and the Java Runtime Environment.

Regulatory compliance	
Safety	- Complies with European EMC Directive for test and measurement products - Complies with Australian standard and carries C-Tick mark - Complies with Canadian ICES-001 - Complies with European Low Voltage Director and carries the CE-marking - Complies with US and Canadian safety regulations **- Not applicable for IT mains supply systems** Declarations of Conformity for this product may be downloaded from the web. Go to http://regulations.corporate.agilent.com and click on “Declarations of Conformity”.
EMC	IEC 61326-1:2005 / EN 61326-1:2006

Outline diagrams

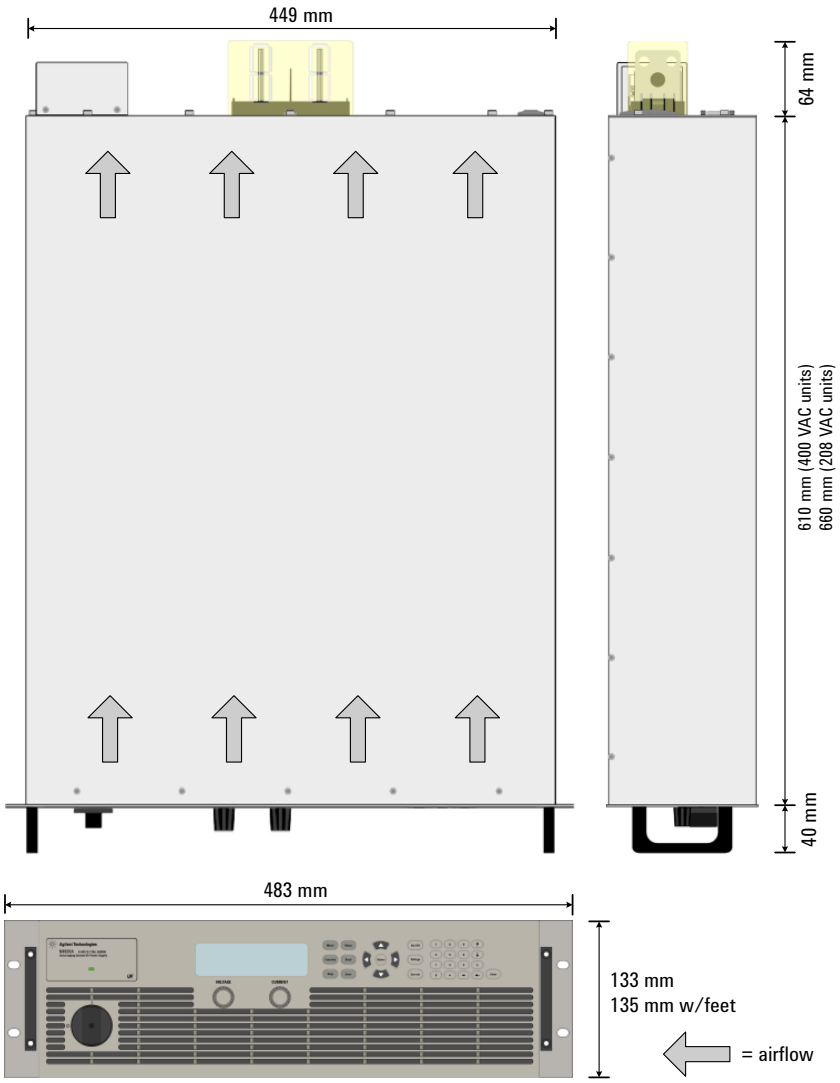

Product Weight
208 VAC models
5 kW models: 18.5 kg (40.6 lbs)
10 kW models: 26.8 kg (59 lbs)
400 VAC models
5 kW models: 16.9 kg (37.2 lbs)
10 kW models: 24.3 kg (53.5 lbs)

DC Output Bus-Bar Detail

80 V and 200 V models

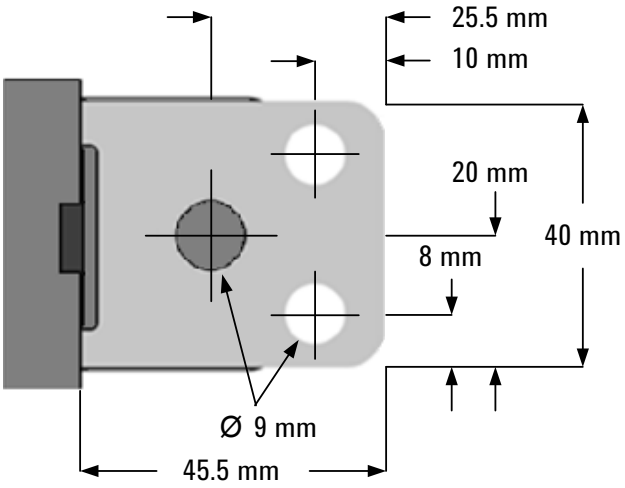

≥ 500 V models

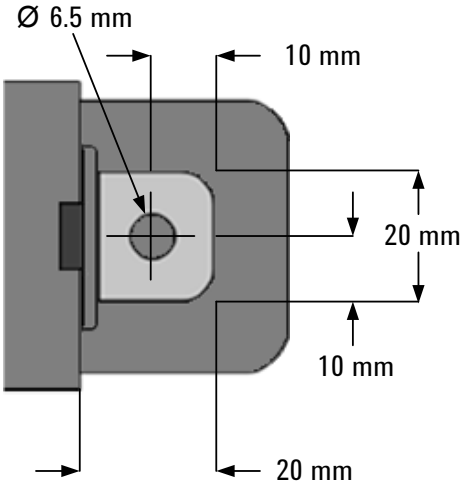

Available models

Model #	Max voltage (V)	Current (A) @ max voltage[4]	Voltage (V) @ max current[4]	Max current (A)	Max power (W)	AC input voltage (VAC)
N8920A	80	62.5	29.4	170	5000	208
N8921A	200	25.0	71.4	70	5000	208
N8923A	500	10.0	166.7	30	5000	208
N8924A	750	6.7	250.0	20	5000	208
N8925A	80	125.0	29.4	340	10000	208
N8926A	200	50.0	71.4	140	10000	208
N8928A	500	20.0	166.7	60	10000	208
N8929A	750	13.3	250.0	40	10000	208
N8930A	1000	10.0	333.3	30	10000	208
N8940A	80	62.5	29.4	170	5000	400
N8941A	200	25.0	71.4	70	5000	400
N8943A	500	10.0	166.7	30	5000	400
N8944A	750	6.7	250.0	20	5000	400
N8945A	80	125.0	29.4	340	10000	400
N8946A	200	50.0	71.4	140	10000	400
N8948A	500	20.0	166.7	60	10000	400
N8949A	750	13.3	250.0	40	10000	400
N8950A	1000	10.0	333.3	30	10000	400

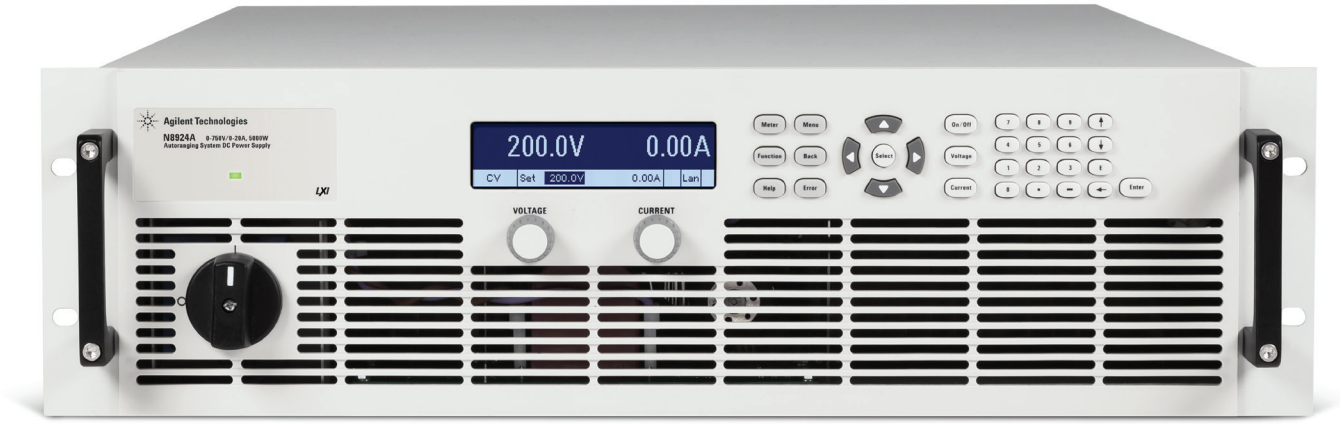

Figure 5. N8924A autoranging system DC power supply

4. *The N8900 Series are autoranging power supplies. The "Current @ Max Voltage" and "Voltage @ Max Current" are listed to show the full range of voltage and current combintations possible due to the autoranging capability.*

Options

None

AC input voltages

If the AC input voltage where the power supply will be used is:

- 187 to 229, please choose a 208 VAC model (N8920A-N8930A)
- 360 to 440 VAC, please choose a 400 VAC model (N8940A-N8950A)

Accessories

N8958A	Rack mount kit for Agilent racks Use standard rack rails for non-Agilent racks.

Line cords and terminations (plugs)

Due to the number of different line cords and terminations around the world, the N8900 power supplies do not come with line cords or terminations. Users will need to supply their own dependent on the local laws and codes of the country/region where the power supply will be used.

www.agilent.com
www.agilent.com/find/N8900

myAgilent

www.agilent.com/find/myagilent
A personalized view into the information most relevant to you.

www.axiestandard.org

AdvancedTCA® Extensions for Instrumentation and Test (AXIe) is an open standard that extends the AdvancedTCA for general purpose and semiconductor test. Agilent is a founding member of the AXIe consortium.

www.lxistandard.org

LAN eXtensions for Instruments puts the power of Ethernet and the Web inside your test systems. Agilent is a founding member of the LXI consortium.

www.pxisa.org

PCI eXtensions for Instrumentation (PXI) modular instrumentation delivers a rugged, PC-based high-performance measurement and automation system.

Three-Year Warranty

www.agilent.com/find/ThreeYearWarranty
Beyond product specification, changing the ownership experience. Agilent is the only test and measurement company that offers three-year warranty on all instruments, worldwide.

Agilent Assurance Plans

www.agilent.com/find/AssurancePlans
Five years of protection and no budgetary surprises to ensure your instruments are operating to specifications and you can continually rely on accurate measurements.

www.agilent.com/quality

Agilent Electronic Measurement Group
DEKRA Certified ISO 9001:2008
Quality Management System

Agilent Channel Partners

www.agilent.com/find/channelpartners
Get the best of both worlds: Agilent's measurement expertise and product breadth, combined with channel partner convenience.

For more information on Agilent Technologies' products, applications or services, please contact your local Agilent office. The complete list is available at:
www.agilent.com/find/contactus

Americas

Canada	(877) 894 4414
Brazil	(11) 4197 3600
Mexico	01800 5064 800
United States	(800) 829 4444

Asia Pacific

Australia	1 800 629 485
China	800 810 0189
Hong Kong	800 938 693
India	1 800 112 929
Japan	0120 (421) 345
Korea	080 769 0800
Malaysia	1 800 888 848
Singapore	1 800 375 8100
Taiwan	0800 047 866
Other AP Countries	(65) 375 8100

Europe & Middle East

Belgium	32 (0) 2 404 93 40
Denmark	45 45 80 12 15
Finland	358 (0) 10 855 2100
France	0825 010 700*
	*0.125 €/minute
Germany	49 (0) 7031 464 6333
Ireland	1890 924 204
Israel	972-3-9288-504/544
Italy	39 02 92 60 8484
Netherlands	31 (0) 20 547 2111
Spain	34 (91) 631 3300
Sweden	0200-88 22 55
United Kingdom	44 (0) 118 927 6201

For other unlisted countries:
www.agilent.com/find/contactus
(BP-1-15-14)

Product specifications and descriptions in this document subject to change without notice.

© Agilent Technologies, Inc. 2013-2014
Published in USA, August 4, 2014
5991-2818ENDI

Agilent Technologies