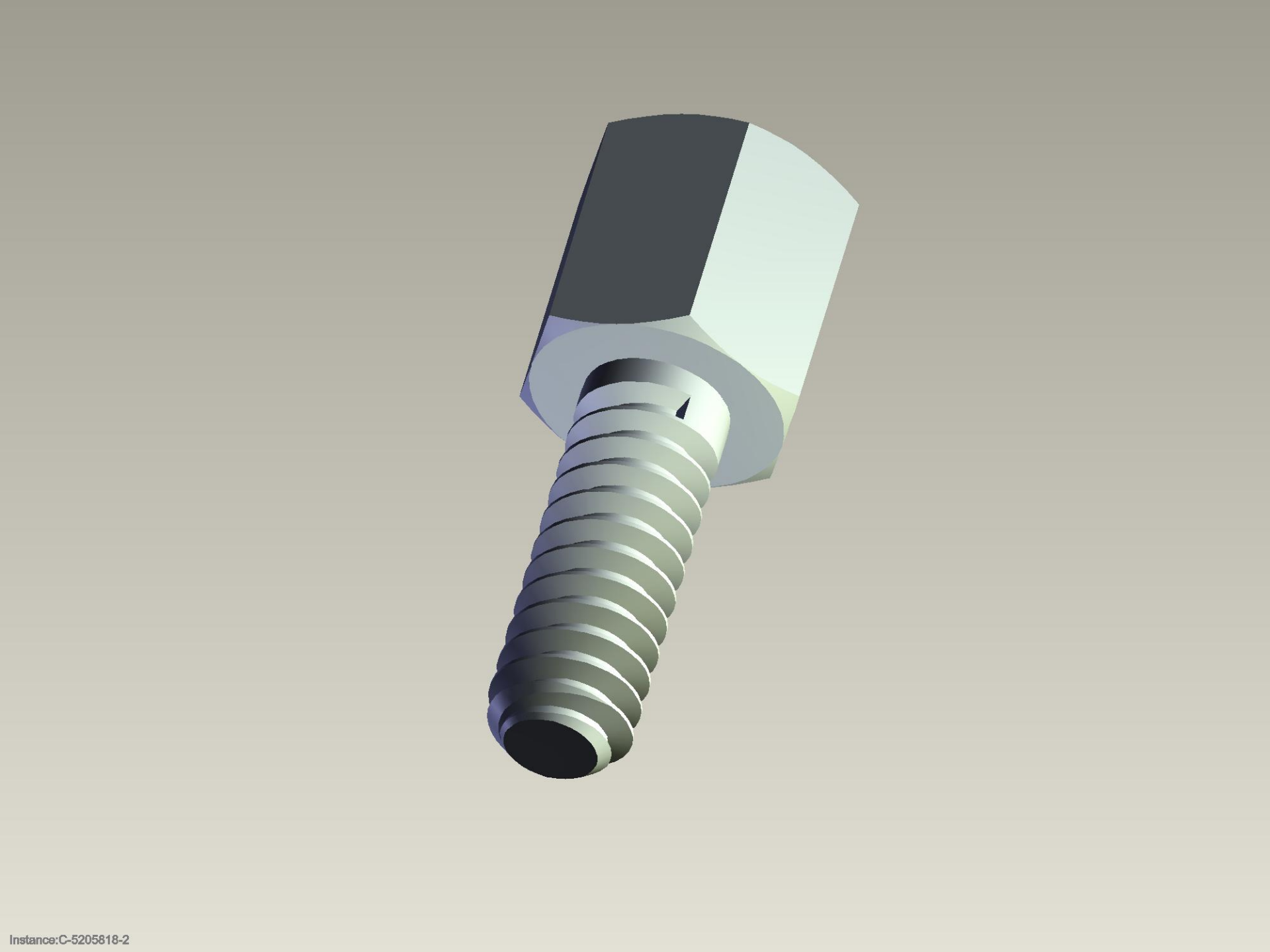
Instance:C-5205818-2