ASMT-UWB1-Nxxxx

OneWhite Surface Mount PLCC-2 LED Indicator

Data Sheet

Lead (Pb) Free
RoHS 6 fully
compliant

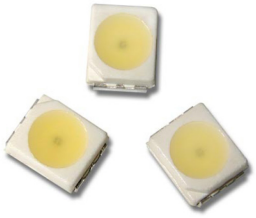

Description

This family of SMT LEDs is packaged in the industry standard PLCC-2 package. These SMT LEDs have high reliability performance and are designed to work under a wide range of environmental conditions. This high reliability feature makes them ideally suited to be used as interior signs application conditions.

To facilitate easy pick & place assembly, the LEDs are packed in EIA-compliant tape and reel. Every reel will be shipped in single intensity and color bin.

These LEDs are compatible with reflow soldering process.

The wide viewing angle at 120° makes these LEDs ideally suited for panel, push button, office equipment, industrial equipment, and home appliances. The flat top emitting surface makes it easy for these LEDs to mate with light pipes. With the built-in reflector pushing up the intensity of the light output, these LEDs are also suitable to be used as LED pixels in interior electronic signs.

Features

- High reliability package with silicone encapsulation
- Compatible with reflow soldering process
- High optical efficiency with 100 lm/W
- Available in 8 mm carrier tape with reel diameter 180mm
- JEDEC MSL 3 product
- ESD threshold of 1000 V (HBM model) per Jedec

Applications

- Non-automotive use
- General Signage backlighting
- Amusement machine backlighting
- Industrial lighting
- Light strips

CAUTION: *LEDs are ESD sensitive. Please observe appropriate precautions during handling and processing.*

This preliminary data is provided to assist you in the evaluation of product(s) currently under development. Until Avago Technologies releases this product for general sales, Avago Technologies reserves the right to alter prices, specifications, features, capabilities, functions, release dates, and remove availability of the product(s) at anytime.

Package Drawing

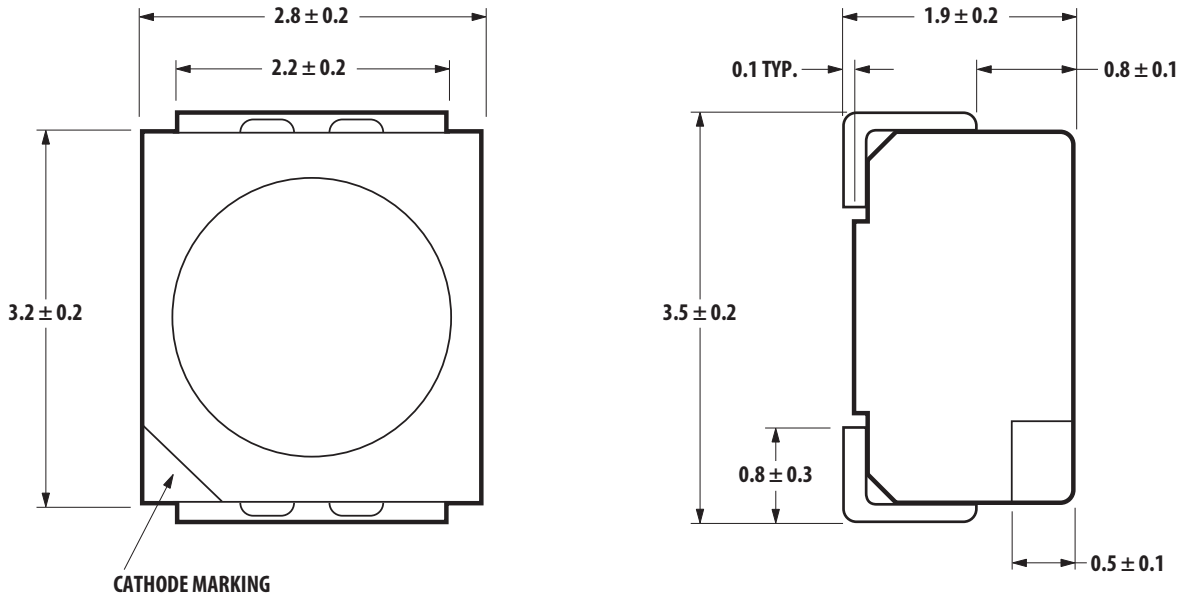

Notes:
1. All dimensions in millimeters.
2. Terminal finish = Ag plating.

Device Selection Guide

Color	Part Number	CCT (K)	Luminous Intensity (mcd) [1,2] Min	Typ	Max	Test Current (mA)	Chip
White	ASMT-UWB1-NX302	4500 ~ 8000	1800	2300	3550	20	InGaN
White	ASMT-UWB1-NX312	2700 ~ 4000	1800	2300	3550	20	InGaN
White	ASMT-UWB1-NX3A2	8000	1800	2300	3550	20	InGaN
White	ASMT-UWB1-NX3B2	6500	1800	2300	3550	20	InGaN
White	ASMT-UWB1-NX3C2	5700	1800	2300	3550	20	InGaN
White	ASMT-UWB1-NX3D2	5000	1800	2300	3550	20	InGaN
White	ASMT-UWB1-NX3E2	4500	1800	2300	3550	20	InGaN
White	ASMT-UWB1-NX3F2	4000	1800	2300	3550	20	InGaN
White	ASMT-UWB1-NX3G2	3500	1800	2300	3550	20	InGaN
White	ASMT-UWB1-NX3H2	3000	1800	2300	3550	20	InGaN
White	ASMT-UWB1-NX3J2	2700	1800	2300	3550	20	InGaN
White	ASMT-UWB1-NX7B2	6500	2240	-	4500	20	InGaN
White	ASMT-UWB1-NX7D2	5000	2240	-	4500	20	InGaN
White	ASMT-UWB1-NAAB2	6500	2000	-	2500	20	InGaN
White	ASMT-UWB1-NAAC2	5700	2000	-	2500	20	InGaN
White	ASMT-UWB1-NAAD2	5000	2000	-	2500	20	InGaN
White	ASMT-UWB1-NAAF2	4000	2000	-	2500	20	InGaN
White	ASMT-UWB1-NAAH2	3000	2000	-	2500	20	InGaN

Notes:
1. The luminous intensity is measured at the mechanical axis of the lamp package. The actual peak of the spatial radiation pattern may not be aligned with this axis.
2. Tolerance ±12%

Part Numbering System

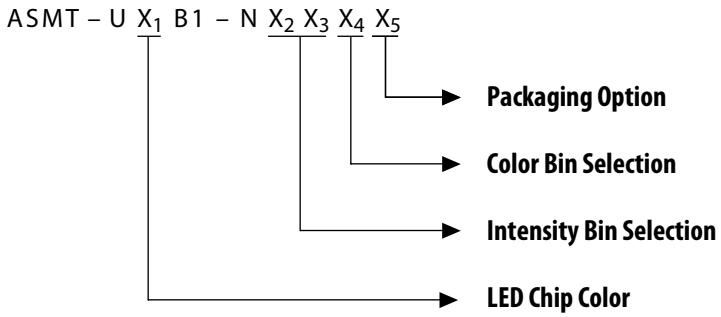

Absolute Maximum Ratings (T_A = 25° C)

Parameters	Rating
DC Forward Current [1]	30 mA
Peak Forward Current [2]	100 mA
Power Dissipation	108 mW
Junction Temperature	110° C
Operating Temperature	-40° C to +85° C
Storage Temperature	-40° C to +100° C

Notes:
1. Derate linearly as shown in derating curve.
2. Duty Factor = 10%, Frequency = 1 kHz

Optical Characteristics (T_A = 25° C)

Color	Part Number	Dice Technology	Typ. Chromaticity Coordinates [1] x	y	Viewing Angle $2\theta_{½}$ [2] (Degrees) Typ.	Luminous Efficiency η_e (lm/W) Typ.	Total Flux / Luminous Intensity θ_V (lm) / I_V (cd) Typ.	CRI Min.
White	ASMT-UWB1-NX302	InGaN	0.33	0.34	120	100	2.8	70

Notes:
1. The chromaticity coordinates are derived from the CIE 1931Chromaticity diagram and represents the perceived color of the device.
2. $\theta_{½}$ is the off-axis angle where the luminous intensity is ½ the peak intensity.

Electrical Characteristics (T_A = 25° C)

Color	Part Number	Forward Voltage V_F (Volts) @ I_F = 20 mA Min.	Max.	Reverse Voltage V_R [1] @ 10 μA Min.	Thermal Resistance $R\theta_{J-P}$ (°C/W)
White	ASMT-UWB1-NX302	2.8	3.6	5	150

Note:
1. Reverse Voltage indicates product final test condition. Long term reverse bias is not recommended.

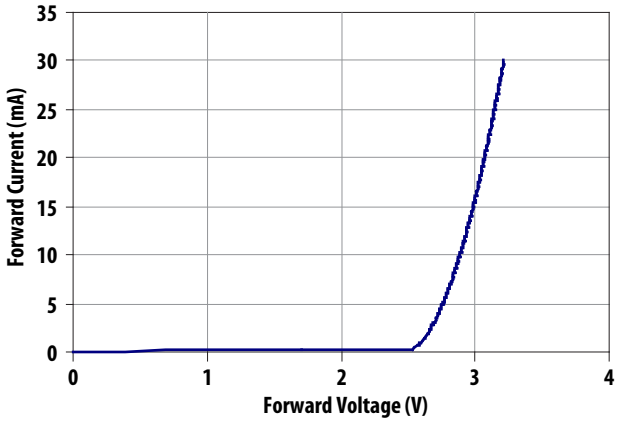

Figure 1. Forward current vs. forward voltage

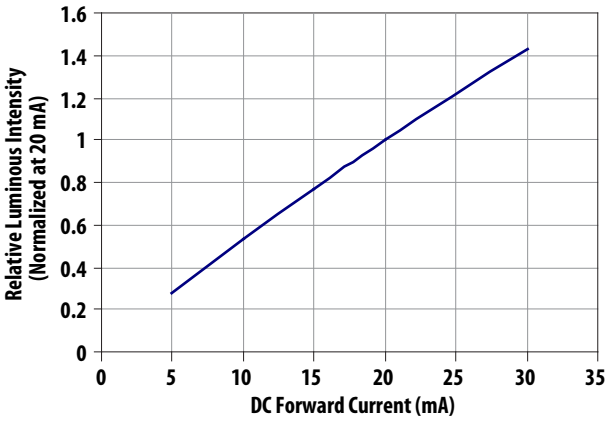

Figure 2. Relative intensity vs. forward current

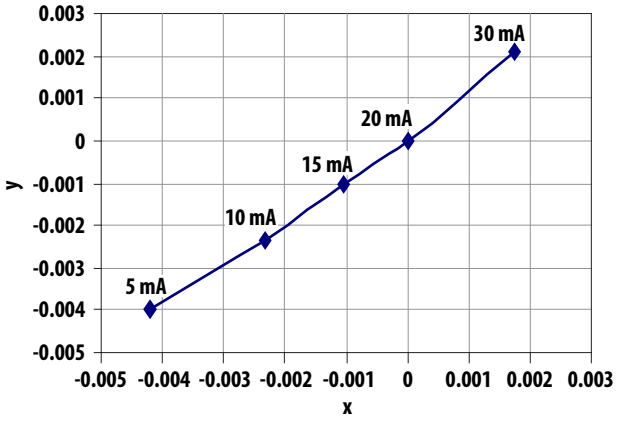

Figure 3. Chromaticity shift vs. current

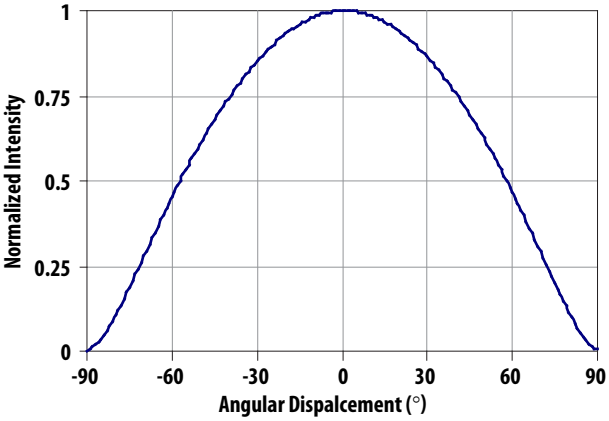

Figure 4. Radiation pattern

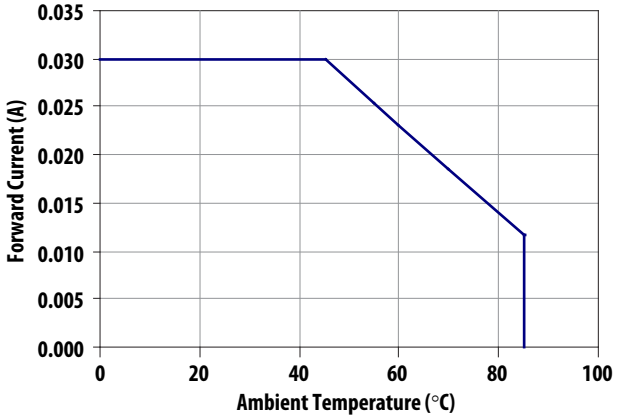

Figure 5. Maximum forward current vs. ambient temperature. Derated based on Tjmax 110° C, Rthja 600°C/W

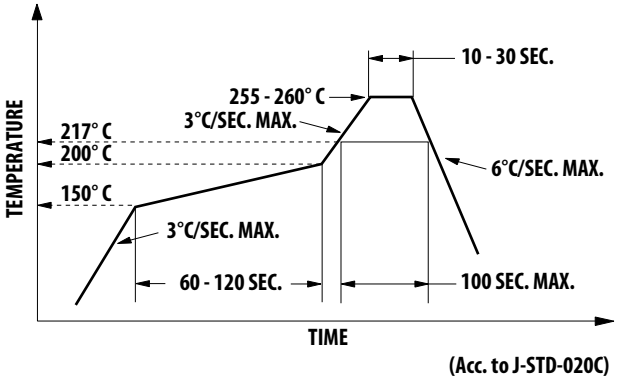

Figure 6. Recommended Pb-free reflow soldering profile

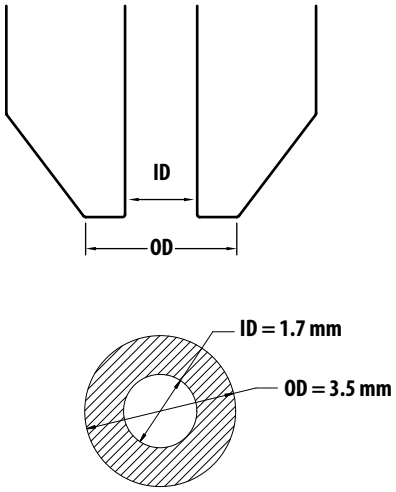

Figure 7. Recommended Pick and Place Nozzle Size

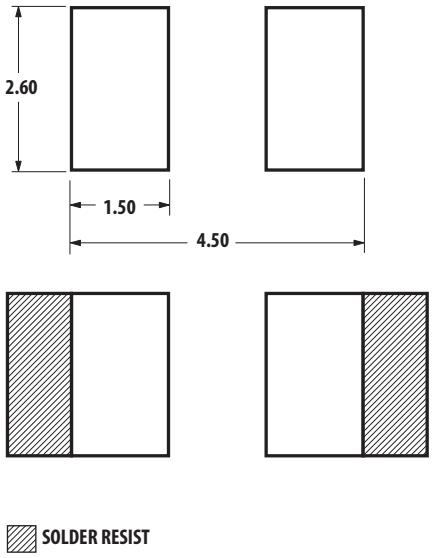

Figure 8. Recommended Soldering Pad Pattern

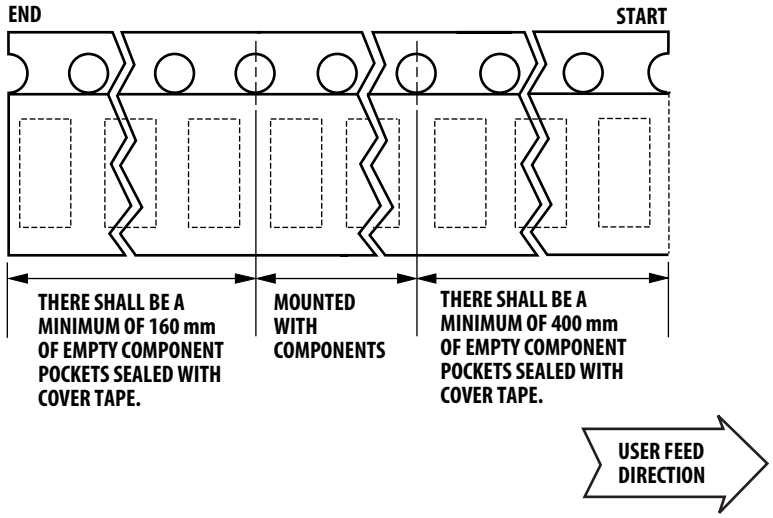

Figure 9. Tape Leader and Trailer Dimensions

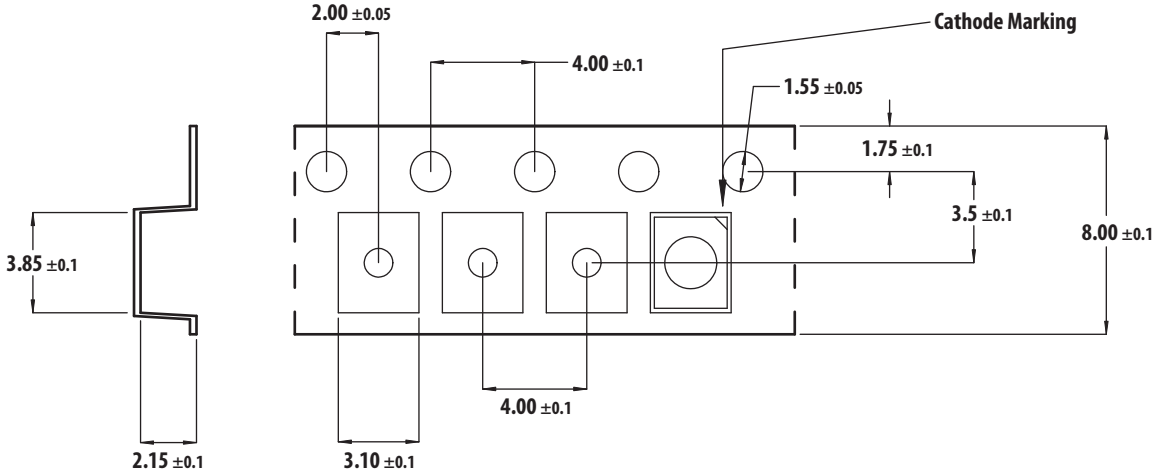

Figure 10. Tape Dimensions (Unit: mm)

Intensity Bin Select (X_2 X_3)

Individual reel will contain parts from one half bin only.

X_2	Min I_V Bin
X3	
0	Full Distribution
3	3 half bins starting from $x_2$1
4	4 half bins starting from $x_2$1
5	5 half bins starting from $x_2$1
7	3 half bins starting from $x_2$2
8	4 half bins starting from $x_2$2
9	5 half bins starting from $x_2$2

Intensity Bin Limits

Bin ID	Min. (mcd)	Max. (mcd)
X1	1800	2240
X2	2240	2850
Y1	2850	3550
Y2	3550	4500
Z1	4500	5600
Z2	5600	7150
AA	2000	2500

Tolerance of each bin limit = ±12%

Color Bin Selection (X_4)

Individual reel will contain parts from one full bin only.

X_4	
Bin	**Color Bin ID**
A	1A, 1B, 1C, 1D
B	2A, 2B, 2C, 2D
C	3A, 3B, 3C, 3D
D	4A, 4B, 4C, 4D
E	5A, 5B, 5C, 5D
F	6A, 6B, 6C, 6D
G	7A, 7B, 7C, 7D
H	8A, 8B, 8C, 8D
J	9A, 9B, 9C, 9D
K	1A, 1B, 1C, 1D, 2A, 2B, 2C, 2D,
L	2A, 2B, 2C, 2D, 3A, 3B, 3C, 3D
M	3A, 3B, 3C, 3D, 4A, 4B, 4C, 4D
N	4A, 4B, 4C, 4D, 5A, 5B, 5C, 5D
Q	6A, 6B, 6C, 6D, 7A, 7B, 7C, 7D
R	7A, 7B, 7C, 7D, 8A, 8B, 8C, 8D
S	8A, 8B, 8C, 8D, 9A, 9B, 9C, 9D
0	1A, 1B, 1C, 1D, 2A, 2B, 2C, 2D, 3A, 3B, 3C, 3D, 4A, 4B, 4C, 4D, 5A, 5B, 5C, 5D
1	6A, 6B, 6C, 6D, 7A, 7B, 7C, 7D, 8A, 8B, 8C, 8D, 9A, 9B, 9C, 9D

Color Bin ID Limits

Color Bin ID	Chromaticity Coordinates Limits				
1A	x	0.2950	0.2920	0.2984	0.3009
	y	0.2970	0.3060	0.3133	0.3042
1B	x	0.2920	0.2895	0.2962	0.2984
	y	0.3060	0.3135	0.3220	0.3133
1C	x	0.2984	0.2962	0.3028	0.3048
	y	0.3133	0.3220	0.3304	0.3207
1D	x	0.2984	0.3048	0.3068	0.3009
	y	0.3133	0.3207	0.3113	0.3042
2A	x	0.3048	0.3130	0.3144	0.3068
	y	0.3207	0.3290	0.3186	0.3113
2B	x	0.3028	0.3115	0.3130	0.3048
	y	0.3304	0.3391	0.3290	0.3207
2C	x	0.3115	0.3205	0.3213	0.3130
	y	0.3391	0.3481	0.3373	0.3290
2D	x	0.3130	0.3213	0.3221	0.3144
	y	0.3290	0.3373	0.3261	0.3186
3A	x	0.3215	0.3290	0.3290	0.3222
	y	0.3350	0.3417	0.3300	0.3243
3B	x	0.3207	0.3290	0.3290	0.3215
	y	0.3462	0.3538	0.3417	0.3350
3C	x	0.3290	0.3376	0.3371	0.3290
	y	0.3538	0.3616	0.3490	0.3417
3D	x	0.3290	0.3371	0.3366	0.3290
	y	0.3417	0.3490	0.3369	0.3300
4A	x	0.3371	0.3451	0.3440	0.3366
	y	0.3490	0.3554	0.3427	0.3369
4B	x	0.3376	0.3463	0.3451	0.3371
	y	0.3616	0.3687	0.3554	0.3490
4C	x	0.3463	0.3551	0.3533	0.3451
	y	0.3687	0.3760	0.3620	0.3554
4D	x	0.3451	0.3533	0.3515	0.3440
	y	0.3554	0.3620	0.3487	0.3427
5A	x	0.3530	0.3615	0.3590	0.3512
	y	0.3597	0.3659	0.3521	0.3465
5B	x	0.3548	0.3641	0.3615	0.3530
	y	0.3736	0.3804	0.3659	0.3597
5C	x	0.3641	0.3736	0.3702	0.3615
	y	0.3804	0.3874	0.3722	0.3659
5D	x	0.3615	0.3702	0.3670	0.3590
	y	0.3659	0.3722	0.3578	0.3521

Tolerance of each bin limit = ±0.01

Color Bin ID	Chromaticity Coordinates Limits				
6A	x	0.3670	0.3702	0.3825	0.3783
	y	0.3578	0.3722	0.3798	0.3646
6B	x	0.3702	0.3736	0.3869	0.3825
	y	0.3722	0.3874	0.3958	0.3798
6C	x	0.3825	0.3869	0.4006	0.3950
	y	0.3798	0.3958	0.4044	0.3875
6D	x	0.3783	0.3825	0.3950	0.3898
	y	0.3646	0.3798	0.3875	0.3716
7A	x	0.3889	0.3941	0.4080	0.4017
	y	0.3690	0.3848	0.3916	0.3751
7B	x	0.3941	0.3996	0.4146	0.4080
	y	0.3848	0.4015	0.4089	0.3916
7C	x	0.4080	0.4146	0.4299	0.4221
	y	0.3916	0.4089	0.4165	0.3984
7D	x	0.4017	0.4080	0.4221	0.4147
	y	0.3751	0.3916	0.3984	0.3814
8A	x	0.4147	0.4221	0.4342	0.4259
	y	0.3814	0.3984	0.4028	0.3853
8B	x	0.4221	0.4299	0.4430	0.4342
	y	0.3984	0.4165	0.4212	0.4028
8C	x	0.4342	0.4430	0.4562	0.4465
	y	0.4028	0.4212	0.4260	0.4071
8D	x	0.4259	0.4342	0.4465	0.4373
	y	0.3853	0.4028	0.4071	0.3893
9A	x	0.4373	0.4465	0.4582	0.4483
	y	0.3893	0.4071	0.4099	0.3919
9B	x	0.4465	0.4562	0.4687	0.4582
	y	0.4071	0.4260	0.4289	0.4099
9C	x	0.4582	0.4687	0.4813	0.4700
	y	0.4099	0.4289	0.4319	0.4126
9D	x	0.4483	0.4582	0.4700	0.4593
	y	0.3919	0.4099	0.4126	0.3944

Tolerance of each bin limit = ±0.01

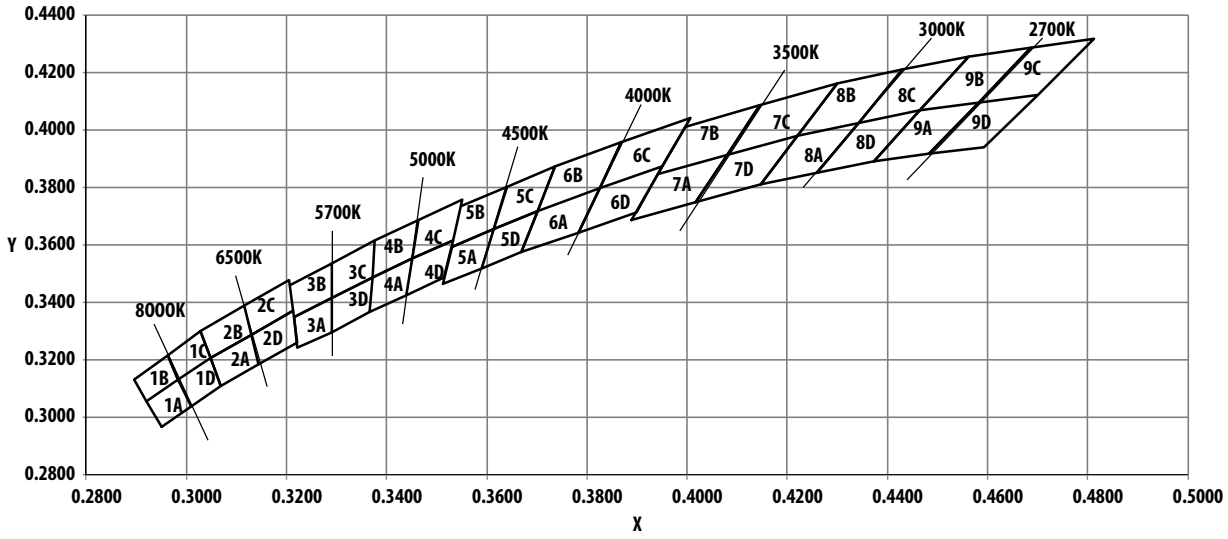

Figure 11. Color Bins

Packaging Option (X_5)

Option	Test Current	Package Type	Reel Size
2	20 mA	Top Mount	7 Inch

Forward Voltage Bin

Bin ID	Min.	Max
F05	2.8	3.0
F06	3.0	3.2
F07	3.2	3.4
F08	3.4	3.6

Tolerance of each bin limit = ±0.1 V

DISCLAIMER: *Avago's products and software are not specifically designed, manufactured or authorized for sale as parts, components or assemblies for the planning, construction, maintenenace or direct operation of a nuclear facility or for use in medical devices or applications. Customer is solely responsible, and waives all rights to make claims against avago or its suppliers, for all loss, damage, expense or liability in connection with such use.*

For product information and a complete list of distributors, please go to our web site: **www.avagotech.com**

Avago, Avago Technologies, and the A logo are trademarks of Avago Technologies in the United States and other countries.
Data subject to change. Copyright © 2005-2014 Avago Technologies. All rights reserved.
AV02-2936EN - July 4, 2014