DC axial fans

Series 8300 U 80 x 80 x 32 mm

Highlights:
- Motor protection against reverse polarity and locking.
- Air exhaust over struts
- Connection via 310 mm strands AWG 22, TR 64, bared and tin-plated
- Ingress protection rating of IP68

Material: Housing: Fiberglass-reinforced PBT composite
Impeller: Fiberglass-reinforced PA composite

Direction of rotation: Clockwise, seen on rotor

Nominal Data	Air flow	Nominal voltage	Voltage range	Sound pressure level	Sound power level	Ball bearings	Power input	Speed	Temperature range	Mass	Ingress Protection Rating	UL Approval	Curves
Type	CFM	VDC	VDC	dB(A)	Bel(A)		Watts	RPM	°C	g			
8314 U	**31.8**	24	12...31.5	36	5.2	Yes	2.7	3300	-20...75	210	IP68	Yes	1
8312 HLU	**39.4**	12	6...15	43	5.8	Yes	4.0	4200	-20...75	210	IP68	Yes	2
8314 HU	**47.1**	24	12...28	48	6.2	Yes	6.2	5000	-20...65	210	IP68	Yes	3
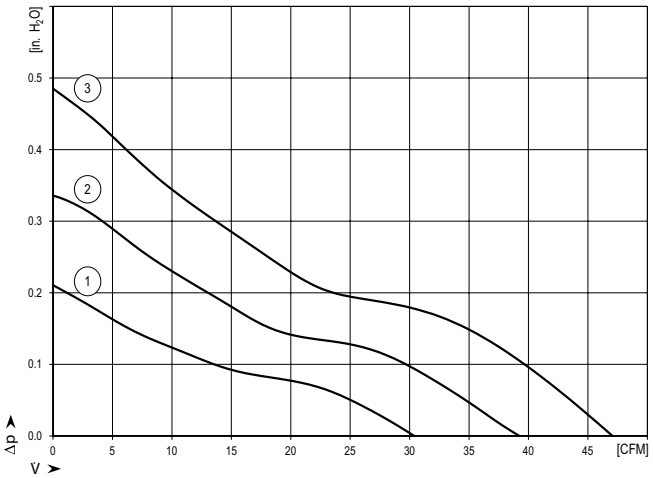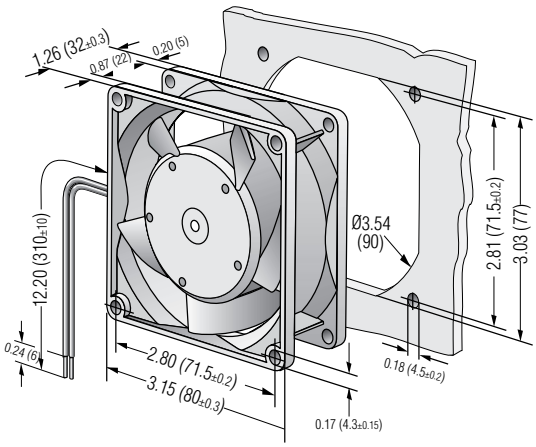
Curves