Revision History				
Rev.	ECO	Description	Date	Approved

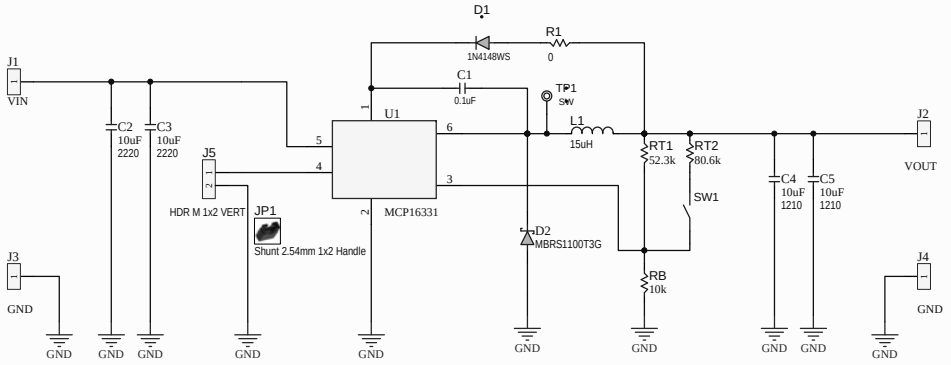

Drawn Tanase Mihai	Date 02-03-2011	Title MCP16331 Buck Converter Evaluation Board	
Checked	Date		
Approved	Date		
Approved	Date	Size B	Doc. Number 03-10128	Rev. 2
Approved	Date		

Printed 4/4/2014 at 8:33:05 AM | Template FileName B_Microchip SCH.SchDoc | Sheet 1 of 1