Copyright FCI.

FCIconnect.com

PRODUCT NUMBER	SERIES NAME	PITCH
20020316-HXXXXXXLF	21-508	5.08 mm

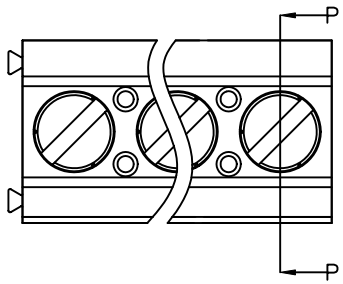

N=NUMBER OF POLES

Dim A	N*5.08[.200]
Dim B	(N-1)*5.08[.200]

POLES	TOLERANCE
2p-6p	±0.15[.006]
7p-12p	±0.25[.010]
13p-16p	±0.35[.014]
17p-24p	±0.40[.016]

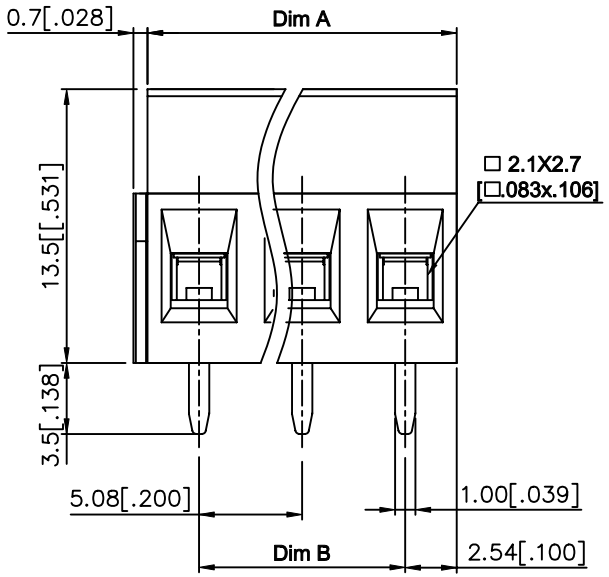

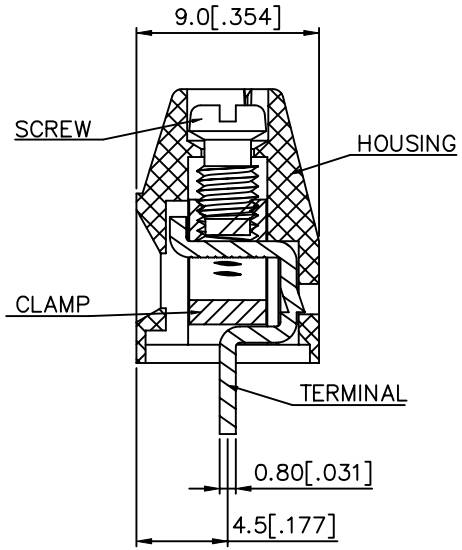

SECTION P-P

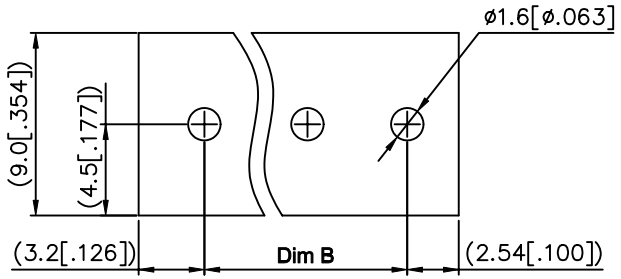

P.C.B LAYOUT

mat'l. code				surface ASME Y14.5	tolerance ASME Y14.5	projection	product family TERMINAL BLOCK
ltr	ecn no	dr	date	tolerances unless otherwise specified			title
H				angles	linear X.±0.5[.020]	MM [INCH]	TERMINAL BLOCK FIXED HORIZONTAL WIRE INLET
				X°±1°	X.X±0.3[.012]		
					X.XX±0.1[.004]	scale	
				dr	BEER FU 062509		dwg no 20020316 sheet 3 of 3 size A4
				engr	BEER FU 062509		
				chr	GARY HSIEH 062509		
				appd	JOSEPH HSIA 062509		type CUSTOMER Drawing
sheet index	revision sheet						

form: A4mmXLc

PDS: Rev :H STATUS:Released Printed: Aug 02, 2011