19-4764; Rev 2; 6/99

8th-Order, Lowpass, Elliptic, Switched-Capacitor Filters

MAX7400/MAX7403/MAX7404/MAX7407

General Description

The MAX7400/MAX7403/MAX7404/MAX7407 8th-order, lowpass, elliptic, switched-capacitor filters (SCFs) operate from a single +5V (MAX7400/MAX7403) or +3V (MAX7404/MAX7407) supply. These devices draw 2mA of supply current and allow corner frequencies from 1Hz to 10kHz, making them ideal for low-power anti-aliasing and post-DAC filtering applications. They feature a shutdown mode that reduces the supply current to 0.2µA.

Two clocking options are available: self-clocking (through the use of an external capacitor) or external clocking for tighter cutoff-frequency control. In addition, an offset adjustment pin (OS) allows for the adjustment of the DC output level.

The MAX7400/MAX7404 provide 82dB of stopband rejection and a sharp rolloff with a transition ratio of 1.5. The MAX7403/MAX7407 provide a sharper rolloff with a transition ratio of 1.2, while still delivering 60dB of stopband rejection. The fixed response of these devices simplifies the design task to corner-frequency selection by setting a clock frequency. The MAX7400/MAX7403/MAX7404/MAX7407 are available in 8-pin SO and DIP packages.

Applications

ADC Anti-Aliasing

Post-DAC Filtering

CT2 Base Stations

Speech Processing

Air-Bag Electronics

Typical Operating Circuit

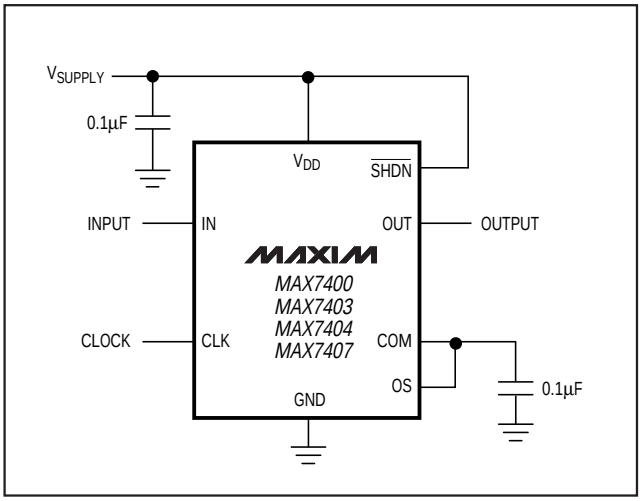

Features

- **8th-Order Lowpass Elliptic Filter**
- **Low Noise and Distortion**
  -82dB THD + Noise (MAX7400)
- **Clock-Tunable Corner Frequency (1Hz to 10kHz)**
- **100:1 Clock-to-Corner Ratio**
- **Single-Supply Operation**
  +5V (MAX7400/MAX7403)
  +3V (MAX7404/MAX7407)
- **Low Power**
  2mA (Operating Mode)
  0.2µA (Shutdown Mode)
- **Available in 8-Pin SO and DIP Packages**
- **Low Output Offset: ±5mV**

Ordering Information

PART	TEMP. RANGE	PIN-PACKAGE
MAX7400CSA	0°C to +70°C	8 SO
MAX7400CPA	0°C to +70°C	8 Plastic DIP
MAX7400ESA	-40°C to +85°C	8 SO
MAX7400EPA	-40°C to +85°C	8 Plastic DIP

Ordering Information continued at end of data sheet.

Selector Guide

PART	FILTER RESPONSE	OPERATING VOLTAGE (V)
MAX7400	Elliptic (r = 1.5)	+5
MAX7403	Elliptic (r = 1.2)	+5
MAX7404	Elliptic (r = 1.5)	+3
MAX7407	Elliptic (r = 1.2)	+3

Pin Configuration

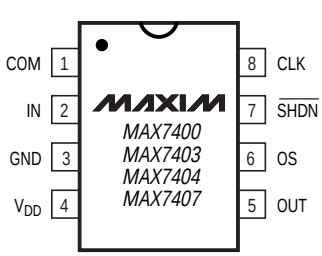

SO/DIP

For free samples & the latest literature: http://www.maxim-ic.com, or phone 1-800-998-8800. For small orders, phone 1-800-835-8769.

8th-Order, Lowpass, Elliptic, Switched-Capacitor Filters

ABSOLUTE MAXIMUM RATINGS

V_{DD} to GND
- MAX7400/MAX7403 .....-0.3V to +6V
- MAX7404/MAX7407 .....-0.3V to +4V

IN, OUT, COM, OS, CLK .....-0.3V to (V_{DD} + 0.3V)
$\overline{SHDN}$.....-0.3V to +6V
OUT Short-Circuit Duration.....1sec

Continuous Power Dissipation (T_A = +70°C)
- SO (derate 5.88mW/°C above +70°C).....471mW
- DIP (derate 9.1mW/°C above +70°C).....727mW

Operating Temperature Ranges
- MAX740_C_A .....0°C to +70°C
- MAX740_E_A .....-40°C to +85°C

Storage Temperature Range .....-65°C to +150°C
Lead Temperature (soldering, 10sec) .....+300°C

Stresses beyond those listed under "Absolute Maximum Ratings" may cause permanent damage to the device. These are stress ratings only, and functional operation of the device at these or any other conditions beyond those indicated in the operational sections of the specifications is not implied. Exposure to absolute maximum rating conditions for extended periods may affect device reliability.

ELECTRICAL CHARACTERISTICS—MAX7400/MAX7403

(V_{DD} = +5V, filter output measured at OUT, 10kΩ || 50pF load to GND at OUT, $\overline{SHDN}$ = V_{DD}, OS = COM, 0.1µF from COM to GND, f_{CLK} = 100kHz, T_A = T_{MIN} to T_{MAX}, unless otherwise noted. Typical values are at +25°C.)

CONDITIONS
(Note 1)
V_{IN} = V_{COM} = V_{DD} / 2
V_{COM} = V_{DD} / 2 (Note 2)

Input, COM externally driven	
Output, COM internally biased	
$\overline{SHDN}$ = GND, V_{COM} = 0 to V_{DD}	
V_{OS} = 0 to (V_{DD} - 1V) (Note 3)	µA