FEMALE END VIEW	MALE END VIEW
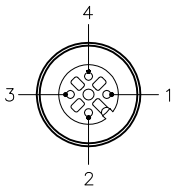	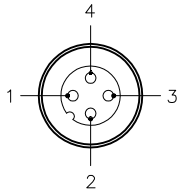
1 = BROWN 2 = WHITE 3 = BLUE 4 = BLACK	1 = BROWN 2 = WHITE 3 = BLUE 4 = BLACK

SPECIFICATIONS

CONTACT CARRIER MATERIAL	TPU or NYLON
MOLDED HEAD MATERIAL/COLOR	TPU/YELLOW
CONTACT MATERIAL/PLATING	BRASS/GOLD
COUPLING NUT MATERIAL/PLATING	BRASS/NICKEL
RATED CURRENT [A]	4.0 A
RATED VOLTAGE [V]	250 V
OUTER CABLE JACKET MATERIAL/COLOR	TPE/YELLOW
CONDUCTOR INSULATION MATERIAL	POLYESTER ELASTOMER
NUMBER OF CONDUCTORS [AWG]	4x18 AWG
TEMPERATURE RANGE	−40°C to +105°C (−40°F to +221°F)
PROTECTION CLASS	NEMA 1,3,4,6P AND IEC IP68, IP69K

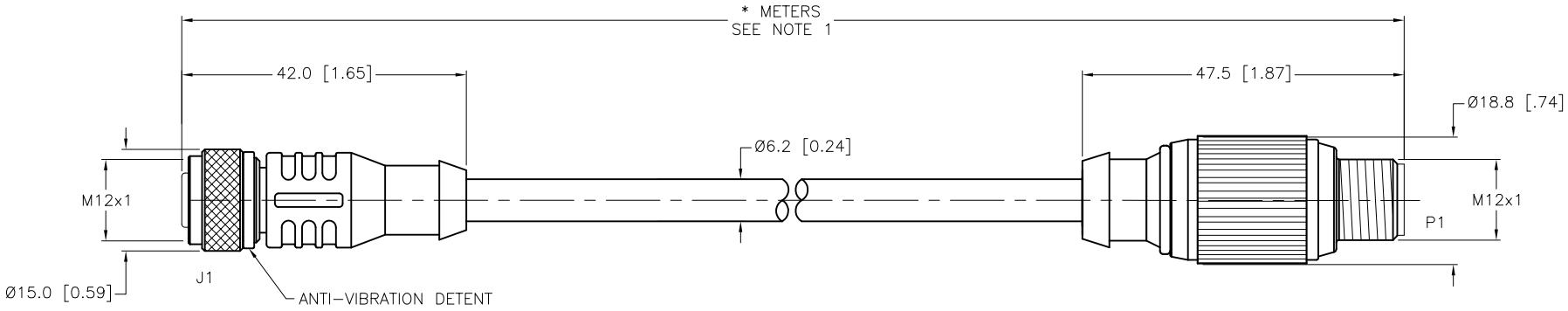

CABLE LENGTH	TOLERANCE *
ALL LENGTHS	+ 4% (OR 50mm) OF LENGTH − 0% (OR 0mm) OF LENGTH WHICHEVER IS GREATER
STRIP LENGTH	**TOLERANCE ***
0−7mm	±0.5mm
8−29mm	±1.0mm
30−49mm	±2.0mm
50−69mm	±3.0mm
70−100mm	±4.0mm
OVER 100mm	±5.0mm
* UNLESS OTHERWISE SPECIFIED	

NOTES:

1. "*" INDICATES CABLE LENGTH IN METERS. CONTACT TURCK TO ORDER SPECIFIC LENGTHS.

2. "/S101" DESIGNATES FLEXLIFE−20 AND CTRACK CABLE.

SOURCE DRAWING - FOR REFERENCE ONLY

RELATED DOCUMENTS
1.
2.
3.
4.

3RD ANGLE PROJECTION

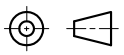

THIS DRAWING IS CONFIDENTIAL AND THE PROPERTY OF TURCK INC. USE OF THIS DOCUMENT WITHOUT WRITTEN PERMISSION IS PROHIBITED.

TURCK INC
High Technology Sensors and Automation Controls
3000 CAMPUS DRIVE
MINNEAPOLIS, MN 55441
1−800−544−7769
(763) 553−7300
(763) 553−0708 fax
turck.com

MATERIAL: SEE SPECIFICATIONS

FINISH: SEE SPECIFICATIONS

ALL DIMENSIONS DISPLAYED ON THIS DRAWING ARE FOR REFERENCE ONLY

CONTACT TURCK FOR MORE INFORMATION

DRFT: RDS | DATE: 05/20/08
APVD: | SCALE: 1=1.0

UNIT OF MEASUREMENT
MILLIMETER [INCH]
DO NOT SCALE THIS DRAWING

DESCRIPTION: RKC 4.4T−*−RSG 4.4T/S101

IDENTIFICATION NO.:

REV: G

FILE: 777021821 | SHEET 1 OF 1

REV	DESCRIPTION	BY	DATE	ECO NO.
G	UPDATE SOURCE DRAWING − ADD CTRACK TO /S101 NOTE	CBM	02/18/14	44634

Approved 02/24/2014, work order #51826 by C.M.