REVISIONS		
ISS	ZONE	DESCRIPTION\PER REQUEST\DATE
A4	A-1	中套材质PE更换为PA6+30%玻纤
V	OPEN	對客戶公開圖紙
V	OPEN	對供應商公開圖紙
	CLOSED	僅限廠內使用

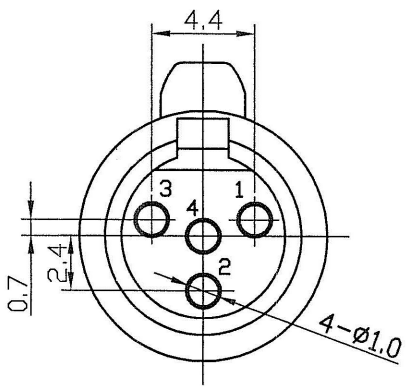

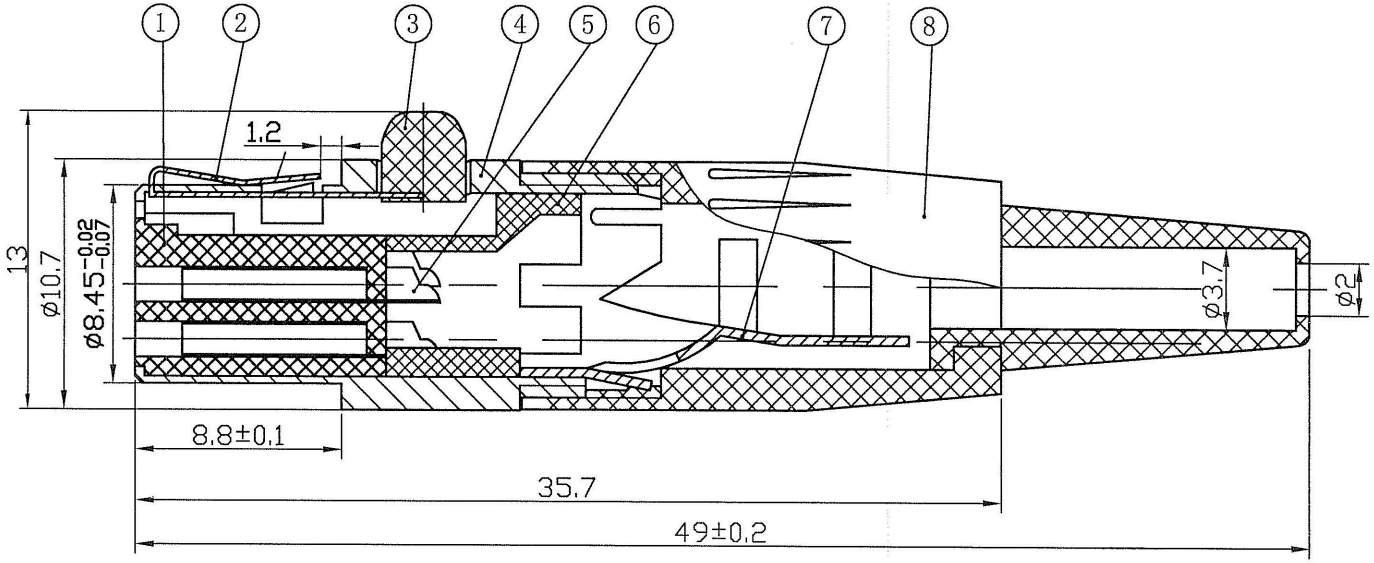

技术要求(Technique Request):

1. 外表光滑,周边无毛刺(Smooth appearance, no burr);
2. 螺纹旋入顺畅,不得滑牙及卡牙(Tip can't be loose, broken)
3. 与公座配插顺畅(Smooth thread).

NO.	DESCRIPTION	MATERIAL	FINISH	Q'TY	DRAWING NO.
8	螺套(NUT)	ABS+PVC		1	1601120123
7	夹线爪(CHUCK)	H62	镀镍(NICKEL)	1	
6	中套(MEDIUM COVER)	PA6+30%玻纤	黑色(BLACK)	1	
5	插孔(FEMALE PIN)	磷铜	鍍金(GOLD)	4	
4	本体(BODY)	H59-1	镀镍(NICKEL)	1	
3	按键(PUSH BUTTON)	ABS		1	
2	金属片(SHEET METAL)	65Mn	镀镍(NICKEL)	1	
1	塑粒(INSULATOR)	PA6+30%玻纤		1	

DIMENSIONS ARE IN MILLIMETERS
UNLESS OTHERWISE SPECIFIED TOLERANCES
ANGLES = ±5°
UP TO 6 = ±0.2
6–40 = ±0.4
40–120 = ±0.6
120–315 = ±1
ABOVE 315 = ±1.6

THIRD_ANGLE
SCALE 1/1

APPROVED 余憲錫 DATE 2013.7.31
CHECKED DATE 2013.7.31
DRAWN 王勇 DATE 2013-07-16
FILE NO. D:\CAD\SVP\5112010078_SVP556-TA-4P_CAD01A4
ERP LINK: 5112010078

TITLE 4P MINIATURE XLR CONNECTOR, FEMALE,
PART NO. SVP556-TA-4P
REV. A4