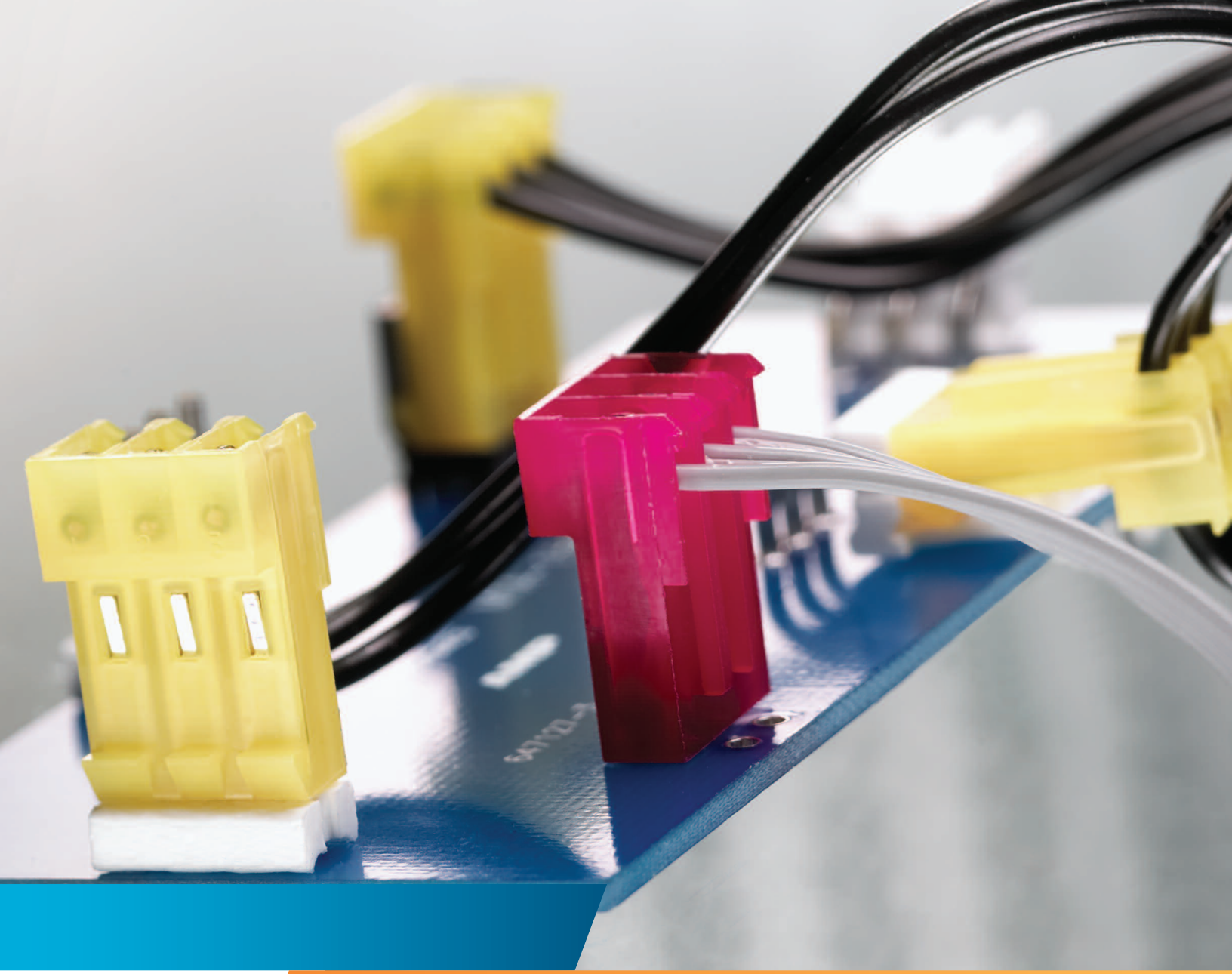

MTA, CST-100 II, SL-156 and AMP Economy Power (EP) Connectors

NOT the LATEST REVISION

Tyco Electronics

Our commitment. Your advantage.

Introduction

This catalog has been designed to assist you, our customer, identify products to satisfy your connector needs for printed circuit board headers, mass termination connectors preloaded with contacts, crimp-snap contacts and housings, and card edge connectors with preloaded contacts.

The list at right identifies by centerline the types of product available and is meant to be of assistance to you in the product selection process.

IDC
MTA-50

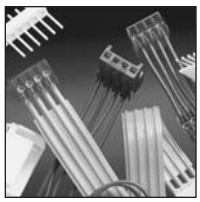

IDC
MTA-100

Crimp
CST-100 II

IDC
MTA-156

© 1977, 1978, 1979, 1980, 1983, 1986, 1988, 1992, 1993, 1994, 1995, 1999, 2000, 2001, 2002, 2003 and 2005 by Tyco Electronics Corporation.
All International Rights Reserved.

AMP, AMP-O-LECTRIC, AMP-O-MATIC, AMPOMATOR, CERTI-CRIMP, PRO-CRIMPER, MADISON CABLE and TYCO are trademarks.

TEFLON is a trademark of E.I. DuPont De Nemours and Company.

Other products, logos, and company names mentioned herein may be trademarks of their respective owners.

Table of Contents

Introduction and Table of Contents 2, 3
Connector Selection Guide 3

.050 [1.27] Centerline Connectors
MTA-50 IDC Connectors and Headers 4-10
Introduction and Wire-to-Board Mateability Guide 4
IDC Connector Kits (Feed-Thru and Closed End)
Ribbon Cable 5, 6
Discrete Wire 7, 8
Through-Hole Header Assemblies
Vertical and Right-Angle 9
Surface Mount Header Assemblies
Vertical and Right-Angle 10

.100 [2.54] Centerline Connectors
MTA-100 IDC Connectors and Headers 11-31
Introduction 11
Wire-to-Board Mateability Guide 12, 13
Connectors — UL94V-2 and UL94V-0
Closed End with and without Polarizing Tab 14, 15
Feed-Thru with and without Polarizing Tab 14, 15
LED Closed End and Feed-Thru — UL94V-2 . . . . . 14, 15
Accessories 16, 17
Posted Connectors Mateability Guide 18, 19
MTA-100 Posted Connectors (Wire-to-Wire) UL94V-2
Closed End 20
Feed-Thru 20
Headers — UL94V-0
Flat — Straight and Right-Angle Posts 21
Narrow Flat — Straight and Right-Angle Posts 22
Polarized — Straight and Right-Angle Posts 23
Friction Lock — Straight and Right-Angle Posts 24
Headers with Retention Peg — Straight Posts 25
High Profile Headers — Right-Angle Posts 26
Polarized — High Temperature, Straight and Right-Angle Posts 27
Friction Lock — High Temperature, Straight and Right-Angle Posts 28
Polarized — Surface Mount, Straight 29
Friction Lock — Surface Mount, Straight 29
Shrouded — Straight and Right-Angle Posts 30
CST-100 II Crimp Contacts, Housings and Shrouded Headers 31, 32

.156 [3.96] Centerline Connectors
MTA-156 IDC Connectors and Headers 33-57
Introduction 33
Wire-to-Board Mateability Guide 34, 35
Connectors — UL94V-2 and UL94V-0
Closed End with Locking Ramp, with and without Polarizing Tabs 36, 37
Closed End without Locking Ramp, with and without Polarizing Tabs 36, 37
Feed-Thru with Locking Ramp, with and without Polarizing Tabs 38, 39
Feed-Thru without Locking Ramp, with and without Polarizing Tabs 38, 39
Accessories 40-42
Posted Connectors Mateability Guide 43, 44
MTA-156 Posted Connectors (Wire-to-Wire) — UL94V-2
Closed End 45
Feed-Thru 45
MTA-156 Headers — UL94V-0
Flat — Straight Posts 46
Flat — Right-Angle Posts 47
Friction Lock — Straight Posts 48
Friction Lock — Right-Angle Posts 49
Polarized Lock — Straight Posts 50
Polarized Lock — Right-Angle Posts 51
Friction Lock — High Temperature, Straight Posts 52
Shrouded — Straight and Right-Angle Posts 53
MTA-156 Quad Connectors — UL94V-0 . . . . . 54, 55
Closed End with Locking Ramp 55
Feed-Thru with Locking Ramp 55

Catalog 82056
Revised 6-08

www.tycoelectronics.com

Dimensions are in inches and millimeters unless otherwise specified. Values in brackets are metric equivalents.

Dimensions are shown for reference purposes only. Specifications subject to change.

USA: 1-800-522-6752
Canada: 1-905-470-4425
Mexico: 52-55-1106-0800
C. America: 57-1-254-4444

South America: 55-11-2103-6000
Hong Kong: 852-2735-1628
Japan: 81-44-844-8013
UK: 44-208-420-8341

Table of Contents (Continued)

Crimp
SL-156

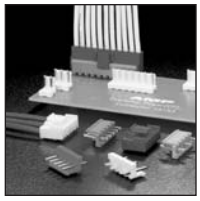

Crimp
AMP EP Connectors

Need more information?

Call Technical Support at the numbers listed below.

Technical Support is staffed with specialists well versed in Tyco Electronics products. They can provide you with:

- Technical support
- Catalogs
- Technical Documents
- Product Samples
- Authorized Distributor Locations

MTA-156 Card Edge 56, 57
Connectors — UL94V-0
Closed End with and without Mounting Ears 56
Feed-Thru with and without Mounting Ears 56
Accessories 57
SL-156 Crimp Connectors and Headers 58-62
Wire-to-Board Mateability Guide 58
Wire-to-Board Crimp Contacts and Keying Plugs 59
Wire-to-Board Housings — UL94V-0 60
Housings with Through Board Latch — UL94V-2 61
Housings and Contacts for Large Insulation Diameter (LID) Wire 62
AMP Economy Power (EP) Connector System 63-69
.156 [3.96] Centerline Connectors
Introduction 63
Crimp Contacts 64
Plug Housings, Low-Profile 64
Low-Profile Headers — Straight and Right-Angle Posts 65
Low-Profile Headers, High Temp. — Straight and Right-Angle Posts 66
.200 [5.08] Centerline Connectors
Plug Housings and Straight and Right-Angle Post Headers 67
.312 [7.92] Centerline Connectors
Low-Profile Headers — Straight Posts 68
Single Connectors
1-Position Plug Housing and High-Profile Header — Straight Post 69
MTA Wire Selection and Ribbon Cable Preparation 70
IDC Ribbon Cable 71-74
MTA Wire Termination Flowchart 75
MTA Application Tooling 76-79
Part Number Index 80-82
Global Contacts 83

Connector Selection Guide

Product Name	Centerline	Contact Termination	Wire-to-Wire Option	No. of Positions	Wire Size (AWG)	Wire Insulation Dia. Max.	Current Rating (A)**	Voltage Rating Max. (VAC)	Operating Temp. Range (°C)	UL Flammability	Replacement Contacts	Approvals
.050" Centerline												
MTA-50 IDC Connector Kits and Headers	**.050** 1.27	IDC	Planned	2–28	30–26	**.039*** 0.99	1	30	–55 to +105	V-0 & V-2	No	
.100" Centerline												
MTA-100 Connectors and Headers	**.100** 2.54	IDC	Yes	2–28	28–22	**.060*** 1.52	5	250	–55 to +105	V-0 & V-2	Yes	
CST-100 II Contacts and Housings	**.100** 2.54	Crimp	Planned	2–28	26–22	**.065** 1.65	4	250	–55 to +105	V-0	Yes	
.156" Centerline												
MTA-156 Connectors and Headers	**.156** 3.96	IDC	Yes	2–24	26–18	**.095*** 2.41	7	600	–55 to +105	V-0 & V-2	Yes	
Quad Connectors	**.156** 3.96	IDC	No	2–12	22–18	**.095*** 2.41	12.5	600	–55 to +105	V-0	Yes	
SL-156 Contacts and Housings	**.156** 3.96	Crimp	No	1–24; 2–10 w/ through board latch	24–18	**.105** 2.67	10	250	–25 to +105	V-0	Yes	
SL-156 Large Ins. Dia. (LID) Contacts and Housings	**.156** 3.96	Crimp	No	2–24	24–16	**.112** 2.84	10	250	–25 to +105	V-0	Yes	
.156", .200" and .312" Centerlines												
AMP Economy Power (EP) Connector System	**.156** 3.96	Crimp	No	1–12	22–18	**.118** 3.00	8 (1 pos.) 7.5 (2–12 Pos.)	250	–25 to +105	V-0	Yes	
	.200 5.08	Crimp	No	2–12	22–18	**.118** 3.00	7.5 (2–12 Pos.)	250	–25 to +105	V-0	Yes	
	.312 7.92	Crimp	No	2–5	22–18	**.118** 3.00	7.5 (2–5 Pos.)	250	–25 to +105	V-0	Yes	

* When terminated one position at a time.
** Current Rating is application dependent.

Catalog 82056
Revised 6-08

www.tycoelectronics.com

Dimensions are in inches and millimeters unless otherwise specified. Values in brackets are metric equivalents.

Dimensions are shown for reference purposes only. Specifications subject to change.

USA: 1-800-522-6752
Canada: 1-905-470-4425
Mexico: 52-55-1106-0800
C. America: 57-1-254-4444

South America: 55-11-2103-6000
Hong Kong: 852-2735-1628
Japan: 81-44-844-8013
UK: 44-208-420-8341

MTA-50 IDC Connectors and Headers

Product Facts

- **2–28 contact positions**
- **Connectors terminate 26, 28 and 30 AWG discrete wire or .050 [1.27] centerline ribbon cable**
- **Color-coded housings**
- **Maximum cable insulation diameter of .039 [0.99] with PVC insulation only**
- **IDC contacts pre-loaded in receptacle housing**
- **30 V, 1 A contact rating**
- **Contact design allows for gold-to-gold or tin-to-tin interface**
- **Contacts are lubricated to prevent fretting corrosion**
- **Wire feed-thru capability for daisy-chain wiring or closed end for point-to-point wiring**
- **Connectors are polarized for proper mating**
- **Manual and semiautomatic application tooling**
- **Mating heights shown below:**

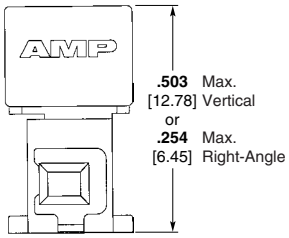

- **Component Recognized by Underwriters Laboratories Inc. to US and Canadian Standards, File No. E28476 (Connectors and Headers) File No. E53793 (Ribbon Cable)**

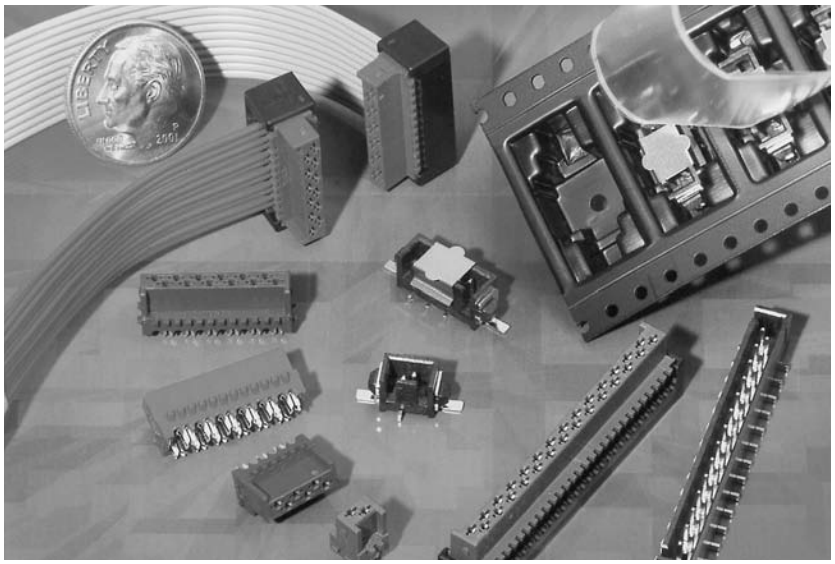

The MTA-50 IDC Connector System is a wire-to-printed circuit board system with contacts in a staggered, single row on .050 [1.27] centerline. The design features wire feed-through capability for daisy-chain applications. Insulation displacement contacts are used to terminate a wide range of conductor sizes. Ribbon cable can also be terminated when the appropriate receptacle assembly and strain relief cover are used.

Header assemblies for board mount applications include right-angle (horizontal) and vertical mount products. These are available in through-hole and surface mount configurations.

Typical uses of the MTA-50 IDC connectors would be in the Appliance, Commercial and Home Equipment and Security products industries.

See the following pages for related products:

- Ribbon Cable (reels), .050 [1.27] centerline (p. 71)
- Application Tooling (p. 76)
- Cable Assemblies (p. 74)

Performance Data

Voltage Rating — 30 VAC

Current Rating — 1 amp max.

Low-Level Resistance — 30 milliohms

Dielectric Withstanding Voltage — 500 VAC

Insulation Resistance — 1,000 megohms

Operating Temperature — –55°C to +105°C for connector only; cable rating may be lower

Technical Documents

Application Specification — 114-13072 MTA-50 Connectors

Product Specifications — 108-2113 MTA-50 Connectors

100-4703 MADISON CABLE Cable Specification (28 AWG, 7/36 Tinned copper, PVC insulation)

100-6257 MADISON CABLE Cable Specification (28 AWG, 7/36 Tinned copper, TPO insulation)

MTA-50 IDC Connector Kit / Header Mateability Guide

These matrixes have been prepared to assist you in defining the correct mating halves for the MTA-50 header and connector kit combination. Where a "Y" is indicated the combination is a valid mating pair.

Note: Tyco Electronics does NOT recommend intermating connectors and headers with different contact platings.

Matrix for Tin Plated Part Numbers

Connector Kits	Headers: 1445120	1445121	1445169	1445172
1445341	Y	Y	Y	Y
1445344	Y	Y	Y	Y
1445347	Y	Y	Y	Y
1445350	Y	Y	Y	Y
1445353	Y	Y	Y	Y
1445356	Y	Y	Y	Y
1445359	Y	Y	Y	Y
1445362	Y	Y	Y	Y
1445365	Y	Y	Y	Y
1445368	Y	Y	Y	Y
1445371	Y	Y	Y	Y
1445374	Y	Y	Y	Y

Matrix for .000030 [0.00076] Gold Plated Part Numbers

Connector Kits	Headers: 1445125	1445126	1445171	1445174
1445343	Y	Y	Y	Y
1445346	Y	Y	Y	Y
1445349	Y	Y	Y	Y
1445352	Y	Y	Y	Y
1445355	Y	Y	Y	Y
1445358	Y	Y	Y	Y
1445361	Y	Y	Y	Y
1445364	Y	Y	Y	Y
1445367	Y	Y	Y	Y
1445370	Y	Y	Y	Y
1445373	Y	Y	Y	Y
1445376	Y	Y	Y	Y

Matrix for .000015 [0.00038] Gold Plated Part Numbers

Connector Kits	Headers: 1445123	1445124	1445170	1445173
1445342	Y	Y	Y	Y
1445345	Y	Y	Y	Y
1445348	Y	Y	Y	Y
1445351	Y	Y	Y	Y
1445354	Y	Y	Y	Y
1445357	Y	Y	Y	Y
1445360	Y	Y	Y	Y
1445363	Y	Y	Y	Y
1445366	Y	Y	Y	Y
1445369	Y	Y	Y	Y
1445372	Y	Y	Y	Y
1445375	Y	Y	Y	Y

Catalog 82056
Revised 6-08

www.tycoelectronics.com

Dimensions are in inches and millimeters unless otherwise specified. Values in brackets are metric equivalents.

Dimensions are shown for reference purposes only. Specifications subject to change.

USA: 1-800-522-6752
Canada: 1-905-470-4425
Mexico: 52-55-1106-0800
C. America: 57-1-254-4444

South America: 55-11-2103-6000
Hong Kong: 852-2735-1628
Japan: 81-44-844-8013
UK: 44-208-420-8341

MTA-50 IDC Connectors and Headers (Continued)

Feed-Thru and Closed End Connectors

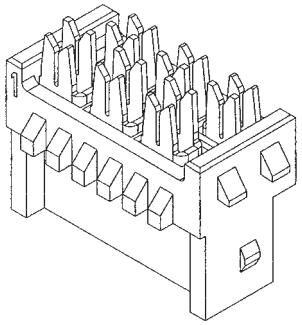

Material and Finish

Housing — UL 94V-2 rated, thermoplastic

Contacts — Phosphor bronze; .000100 [0.00254] min. tin in wire termination area, over .000050 [0.00127] min. nickel; choice on mating end: .000100 [0.00254] min. tin or .000030 [0.00076] gold or .000015 [0.00038] gold, over .000050 [0.00127] min. nickel

Color Coding by Wire Size for UL94V-0 Connectors

26 AWG — Blue
28 AWG — Green
30 AWG — Brown

For Strain Relief Covers see page 6.
For mating Headers see pages 9 and 10.
For Mateability Guide, see matrixes on page 4.

Receptacle Assemblies — Ribbon Cable

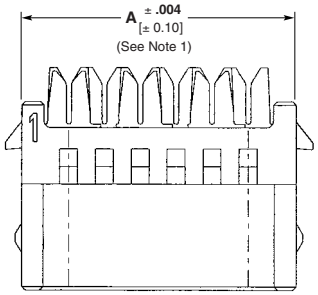

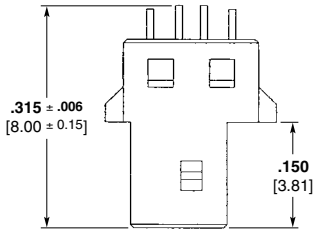

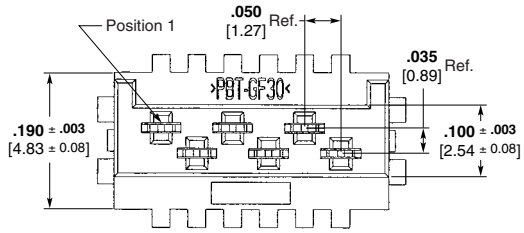

Notes:

1. To determine connector overall length (dim. A), multiply .050 x the number of circuits and add .082. Example: .050 x 10 circuits equals 0.50 + .082 = .582 [14.78].
2. Strain relief covers shown on page 6 are required and sold as part of the Connector Kit.
3. Stranded UL Style 1061 or equivalent wire is recommended.
4. Unless otherwise stated all tolerances (except plating) to be ±.005 [±0.13].
5. Consult Product Drawing for RoHS Compliant information.

Connector Kits — Ribbon Cable

Connector Kit Ordering Information

Connector Kit consists of Receptacle Assembly and Strain Relief Cover.

Base part number prefixes and suffixes indicate the number of circuit positions, for example: Base part number 1445359

2 position = 0-1445359-2
and
28 position = 2-1445359-8

Note: Tin-plated connectors and headers in even position sizes from 2–12 and 18 are stocked parts; all other position sizes and products with gold-plated contacts are Make To Order.

Base Part Numbers

Connector Type & Wire Size	Feed-Thru		Closed End	
	Connector Kit Part Nos.	No. of Circuits	Connector Kit Part Nos.	No. of Circuits
Tin Plated				
26 AWG 0.12–0.15 mm²	1445359	2–28	1445368	2–28
28 AWG 0.08–0.09 mm²	1445362	2–28	1445371	2–28
30 AWG 0.05–0.06 mm²	1445365	2–28	1445374	2–28
.000030 [0.00076] Gold Plated				
26 AWG 0.12–0.15 mm²	1445361	2–28	1445370	2–28
28 AWG 0.08–0.09 mm²	1445364	2–28	1445373	2–28
30 AWG 0.05–0.06 mm²	1445367	2–28	1445376	2–28
.000015 [0.00038] Gold Plated				
26 AWG 0.12–0.15 mm²	1445360	2–28	1445369	2–28
28 AWG 0.08–0.09 mm²	1445363	2–28	1445372	2–28
30 AWG 0.05–0.06 mm²	1445366	2–28	1445375	2–28

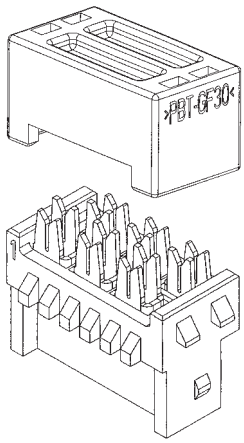

Catalog 82056
Revised 6-08

www.tycoelectronics.com

Dimensions are in inches and millimeters unless otherwise specified. Values in brackets are metric equivalents.

Dimensions are shown for reference purposes only. Specifications subject to change.

USA: 1-800-522-6752
Canada: 1-905-470-4425
Mexico: 52-55-1106-0800
C. America: 57-1-254-4444

South America: 55-11-2103-6000
Hong Kong: 852-2735-1628
Japan: 81-44-844-8013
UK: 44-208-420-8341

MTA-50 IDC Connectors and Headers (Continued)

Connector Kits — Ribbon Cable (Continued)

Strain Relief Covers

Material and Finish

Strain Relief Cover — UL 94V-0 rated, thermoplastic, black

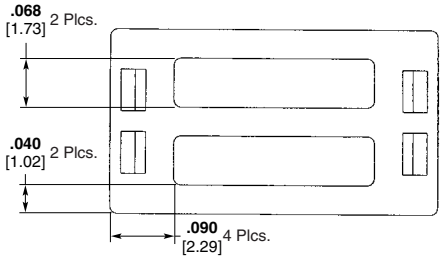

Feed-Thru

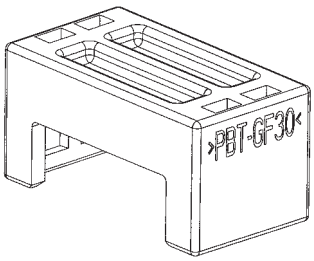

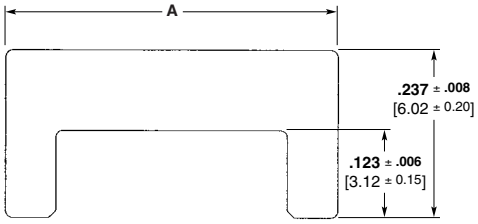

Feed-Thru

Closed End

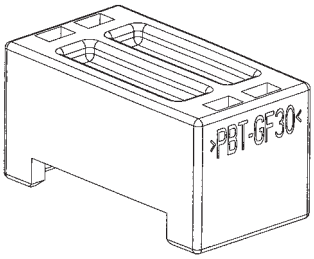

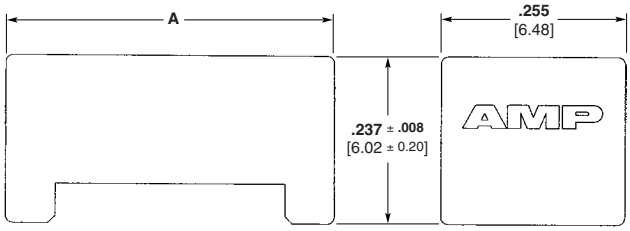

Closed End

Feed-Thru and Closed End

No. of Circuits	Dim. A
2	**.260** 6.60
3	**.310** 7.87
4	**.360** 9.14
5	**.410** 10.41
6	**.460** 11.68
7	**.510** 12.95
8	**.560** 14.22
9	**.610** 15.49
10	**.660** 16.76
11	**.710** 18.03
12	**.760** 19.30
13	**.810** 20.57
14	**.860** 21.84
15	**.910** 23.11

No. of Circuits	Dim. A
16	**.960** 24.38
17	**1.010** 25.65
18	**1.060** 26.92
19	**1.110** 28.19
20	**1.160** 29.46
21	**1.210** 30.73
22	**1.260** 32.00
23	**1.310** 33.27
24	**1.360** 34.54
25	**1.410** 35.81
26	**1.460** 37.08
27	**1.510** 38.35
28	**1.560** 39.62

Catalog 82056
Revised 6-08

www.tycoelectronics.com

Dimensions are in inches and millimeters unless otherwise specified. Values in brackets are metric equivalents.

Dimensions are shown for reference purposes only. Specifications subject to change.

USA: 1-800-522-6752
Canada: 1-905-470-4425
Mexico: 52-55-1106-0800
C. America: 57-1-254-4444

South America: 55-11-2103-6000
Hong Kong: 852-2735-1628
Japan: 81-44-844-8013
UK: 44-208-420-8341

MTA-50 IDC Connectors and Headers (Continued)

Feed-Thru and Closed End Connectors

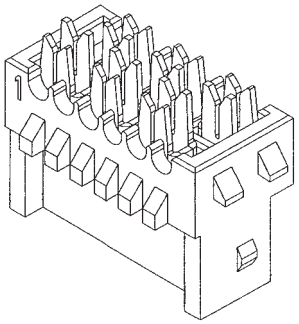

Material and Finish

Housing — UL 94V-2 rated, thermoplastic

Contacts — Phosphor bronze; .000100 [0.00254] min. tin in wire termination area, over .000050 [0.00127] min. nickel; choice on mating end: .000100 [0.00254] min. tin or .000030 [0.00076] gold or .000015 [0.00038] gold, over .000050 [0.00127] min. nickel

Color Coding by Wire Size for UL94V-0 Connectors

26 AWG — Blue
28 AWG — Green
30 AWG — Brown

For Strain Relief Covers see page 8.
For mating Headers see pages 9 and 10.
For Mateability Guide, see matrixes on page 4.

Receptacle Assemblies — Discrete Wire

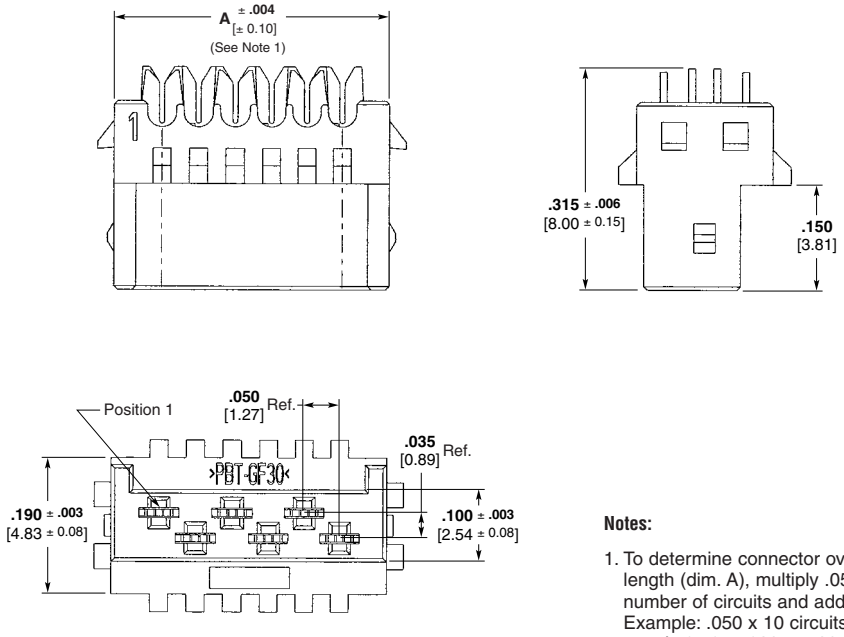

Notes:

1. To determine connector overall length (dim. A), multiply .050 x the number of circuits and add .082. Example: .050 x 10 circuits equals 0.50 + .082 = .582 [14.78].
2. Strain relief covers shown on page 8 are required and sold as part of the Connector Kit.
3. Stranded UL Style 1061 or equivalent wire is recommended.
4. Unless otherwise stated all tolerances (except plating) to be ±.005 [±0.13].
5. Consult Product Drawing for RoHS Compliant information.

Connector Kits — Discrete Wire

Connector Kit Ordering Information

Connector Kit consists of Receptacle Assembly and Strain Relief Cover.

Base part number prefixes and suffixes indicate the number of circuit positions, for example: Base part number 1445341

2 position = 0-1445341-2
and
28 position = 2-1445341-8

Note: Tin-plated connectors and headers in even position sizes from 2–12 and 18 are stocked parts; all other position sizes and products with gold-plated contacts are Make To Order.

Base Part Numbers

Connector Type & Wire Size	Feed-Thru		Closed End	
	Connector Kit Part Nos.	No. of Circuits	Connector Kit Part Nos.	No. of Circuits
Tin Plated				
26 AWG 0.12–0.15 mm²	1445341	2–28	1445350	2–28
28 AWG 0.08–0.09 mm²	1445344	2–28	1445353	2–28
30 AWG 0.05–0.06 mm²	1445347	2–28	1445356	2–28
.000030 [0.00076] Gold Plated				
26 AWG 0.12–0.15 mm²	1445343	2–28	1445352	2–28
28 AWG 0.08–0.09 mm²	1445346	2–28	1445355	2–28
30 AWG 0.05–0.06 mm²	1445349	2–28	1445358	2–28
.000015 [0.00038] Gold Plated				
26 AWG 0.12–0.15 mm²	1445342	2–28	1445351	2–28
28 AWG 0.08–0.09 mm²	1445345	2–28	1445354	2–28
30 AWG 0.05–0.06 mm²	1445348	2–28	1445357	2–28

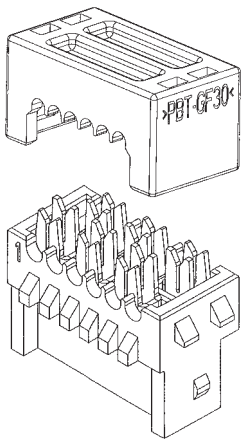

Catalog 82056
Revised 6-08

www.tycoelectronics.com

Dimensions are in inches and millimeters unless otherwise specified. Values in brackets are metric equivalents.

Dimensions are shown for reference purposes only. Specifications subject to change.

USA: 1-800-522-6752
Canada: 1-905-470-4425
Mexico: 52-55-1106-0800
C. America: 57-1-254-4444

South America: 55-11-2103-6000
Hong Kong: 852-2735-1628
Japan: 81-44-844-8013
UK: 44-208-420-8341

MTA-50 IDC Connectors and Headers (Continued)

Connector Kits — Discrete Wire (Continued)

Strain Relief Covers

Material and Finish

Strain Relief Cover — UL 94V-0 rated, thermoplastic, black

Feed-Thru

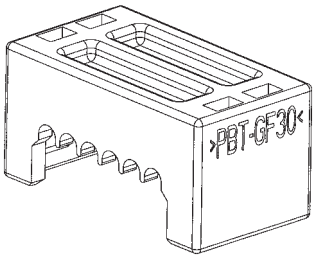

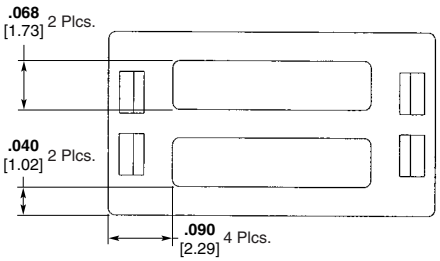

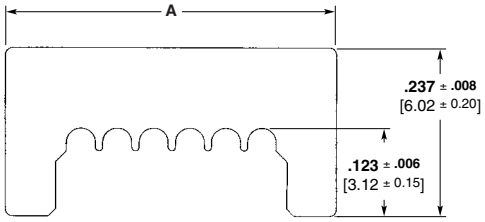

Feed-Thru

Closed End

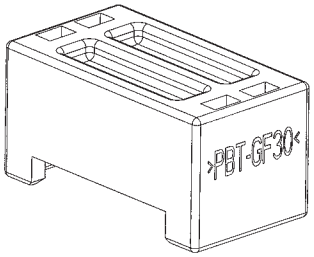

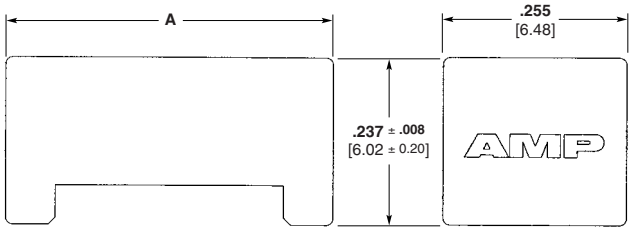

Closed End

Feed-Thru and Closed End

No. of Circuits	Dim. A
2	**.260** 6.60
3	**.310** 7.87
4	**.360** 9.14
5	**.410** 10.41
6	**.460** 11.68
7	**.510** 12.95
8	**.560** 14.22
9	**.610** 15.49
10	**.660** 16.76
11	**.710** 18.03
12	**.760** 19.30
13	**.810** 20.57
14	**.860** 21.84
15	**.910** 23.11

No. of Circuits	Dim. A
16	**.960** 24.38
17	**1.010** 25.65
18	**1.060** 26.92
19	**1.110** 28.19
20	**1.160** 29.46
21	**1.210** 30.73
22	**1.260** 32.00
23	**1.310** 33.27
24	**1.360** 34.54
25	**1.410** 35.81
26	**1.460** 37.08
27	**1.510** 38.35
28	**1.560** 39.62

Catalog 82056
Revised 6-08

www.tycoelectronics.com

Dimensions are in inches and millimeters unless otherwise specified. Values in brackets are metric equivalents.

Dimensions are shown for reference purposes only. Specifications subject to change.

USA: 1-800-522-6752
Canada: 1-905-470-4425
Mexico: 52-55-1106-0800
C. America: 57-1-254-4444

South America: 55-11-2103-6000
Hong Kong: 852-2735-1628
Japan: 81-44-844-8013
UK: 44-208-420-8341

MTA-50 IDC Connectors and Headers (Continued)

Through-Hole Header Assemblies

Vertical

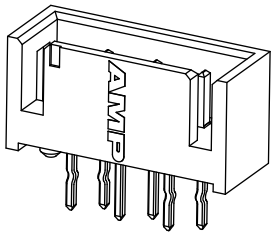

Material and Finish

Housing — UL 94V-0 rated, thermoplastic, black

Contacts — Brass, .000100 [0.00254] min. tin over .000050 [0.00127] min. nickel on solder legs; choice on mating end:
.000100 [0.00254] min. tin or
.000030 [0.00076] gold or
.000015 [0.00038] gold, over
.000050 [0.00127] min. nickel

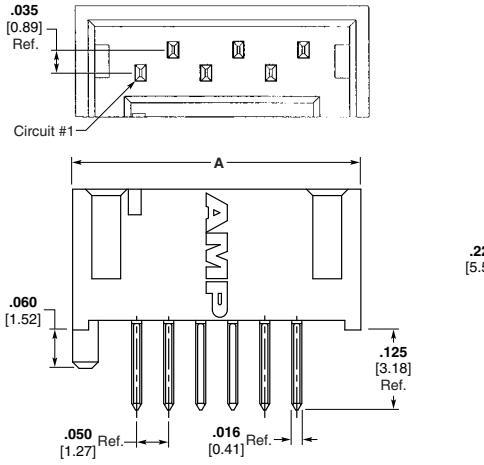

Note: To determine header overall length (dim. A), multiply .050 x the number of circuits and add .150. Example: .050 x 6 circuits equals .300 + .150 = .450 [11.43].

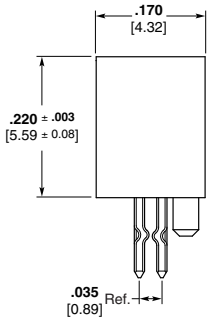

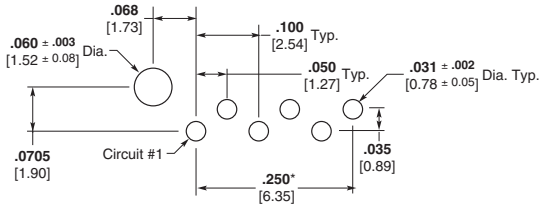

Recommended Mounting Hole Size and Pattern for .062 [1.57] Thick PC Board

* 6-circuit Dim. shown, refer to Product Drawing for actual PCB Dimensions and RoHS Compliant information.

Base Part Numbers

Through-Hole	
Header Part Nos.	**No. of Posts**
Standard UL 94V-0, Tin Plated	
1445120	2–28
Standard UL 94V-0 .000030 [0.00076] Gold Plated	
1445125	2–28
Standard UL 94V-0 .000015 [0.00038] Gold Plated	
1445123	2–28

Right-Angle

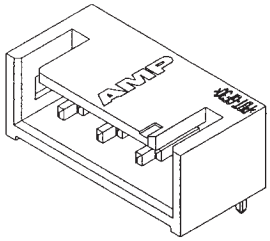

For mating Connector Kits see pages 5 through 8.

For mateability options, see matrixes on page 4.

Header Ordering Information

Base part number prefixes and suffixes indicate the number of circuit positions, for example: Base part number 1445120

2 position = 0-1445120-2
and
28 position = 2-1445120-8

Note: Tin-plated connectors and headers in even position sizes from 2–12 and 18 are stocked parts; all other position sizes and products with gold-plated contacts are Make To Order.

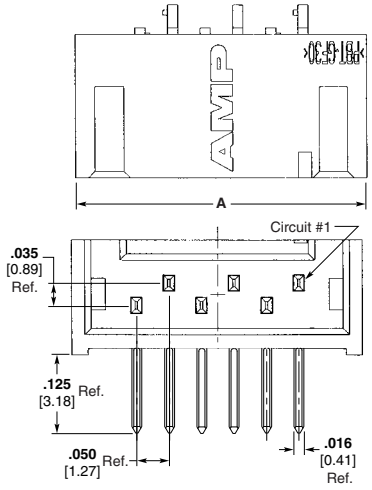

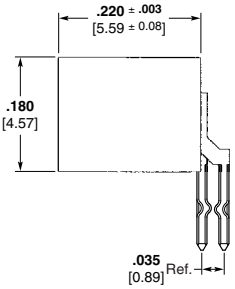

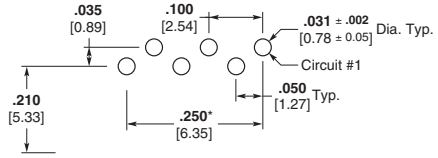

Recommended Mounting Hole Size and Pattern for .062 [1.57] Thick PC Board

* 6-circuit Dim. shown, refer to Product Drawing for ac
PCB Dimensions and RoHS Compliant information.

Base Part Numbers

Through-Hole	
Header Part Nos.	**No. of Posts**
Standard UL 94V-0, Tin Plated	
1445169	2–28
Standard UL 94V-0 .000030 [0.00076] Gold Plated	
1445171	2–28
Standard UL 94V-0 .000015 [0.00038] Gold Plated	
1445170	2–28

Catalog 82056
Revised 6-08

www.tycoelectronics.com

Dimensions are in inches and millimeters unless otherwise specified. Values in brackets are metric equivalents.

Dimensions are shown for reference purposes only. Specifications subject to change.

USA: 1-800-522-6752
Canada: 1-905-470-4425
Mexico: 52-55-1106-0800
C. America: 57-1-254-4444

South America: 55-11-2103-6000
Hong Kong: 852-2735-1628
Japan: 81-44-844-8013
UK: 44-208-420-8341

MTA-50 IDC Connectors and Headers (Continued)

Surface Mount Header Assemblies

Vertical

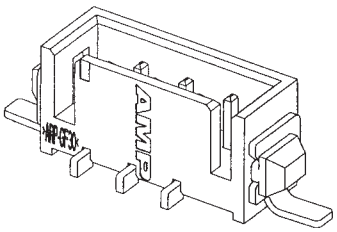

Material and Finish

Housing — UL 94V-0 rated, thermoplastic, black

Contacts — Brass, .000100 [0.00254] min. tin over .000050 [0.00127] min. nickel on solder pads; choice on mating end:
.000100 [0.00254] min. tin or
.000030 [0.00076] gold or
.000015 [0.00038] gold, over
.000050 [0.00127] min. nickel

Boardlock — Phosphor bronze, tin plated .000100 [0.000254] min. over .000050 [0.00127] min. nickel

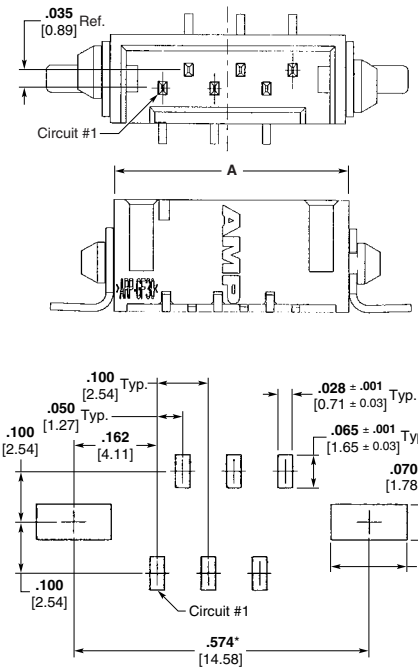

Recommended PC Board Layout for use with .010 [0.25] Thick Stencil

* 6-circuit Dim. shown, refer to Product Drawing for actual PCB Dimensions and RoHS Compliant information.

Note: To determine header overall length (dim. A), multiply .050 x the number of circuits and add .150. Example: .050 x 6 circuits equals .300 + .150 = .450 [11.43].

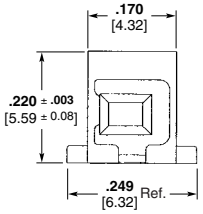

Base Part Numbers

Surface Mount	
Header Part Nos.	No. of Posts
Standard UL 94V-0, Tin Plated	
1445121	2–28
Standard UL 94V-0 .000030 [0.00076] Gold Plated	
1445126	2–28
Standard UL 94V-0 .000015 [0.00038] Gold Plated	
1445124	2–28

Note: All SMT product is prepackaged in standard tape and reel format.

Right-Angle

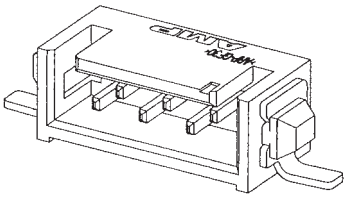

For mating Connector Kits see pages 5 through 8.

For mateability options, see matrixes on page 4.

Header Ordering Information

Base part number prefixes and suffixes indicate the number of circuit positions, for example: Base part number 1445121

2 position = 0-1445121-2
and
28 position = 2-1445121-8

Note: Tin-plated connectors and headers in even position sizes from 2–12 and 18 are stocked parts; all other position sizes and products with gold-plated contacts are Make To Order.

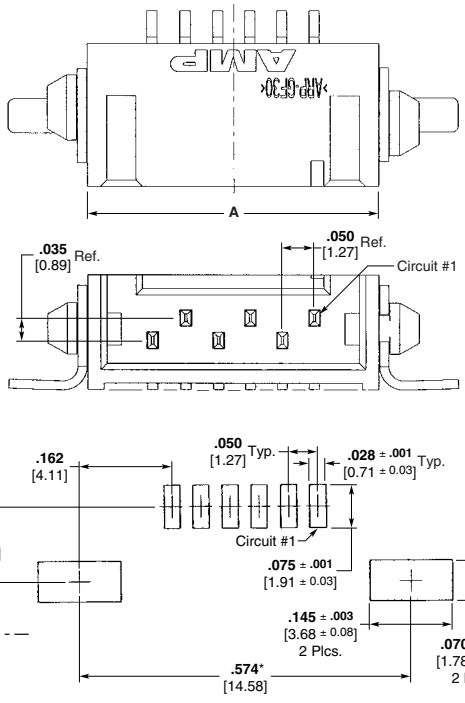

Recommended PC Board Layout for use with .010 [0.25] Thick Stencil

* 6-circuit Dim. shown, refer to Product Drawing for actual PCB Dimensions and RoHS Compliant information.

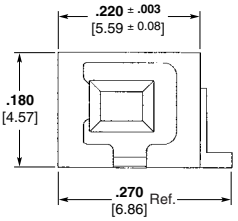

Base Part Numbers

Surface Mount	
Header Part Nos.	No. of Posts
Standard UL 94V-0, Tin Plated	
1445172	2–28
Standard UL 94V-0 .000030 [0.00076] Gold Plated	
1445174	2–28
Standard UL 94V-0 .000015 [0.00038] Gold Plated	
1445173	2–28

Catalog 82056
Revised 6-08

www.tycoelectronics.com

Dimensions are in inches and millimeters unless otherwise specified. Values in brackets are metric equivalents.

Dimensions are shown for reference purposes only. Specifications subject to change.

USA: 1-800-522-6752
Canada: 1-905-470-4425
Mexico: 52-55-1106-0800
C. America: 57-1-254-4444

South America: 55-11-2103-6000
Hong Kong: 852-2735-1628
Japan: 81-44-844-8013
UK: 44-208-420-8341

.100 [2.54] Centerline MTA-100 IDC Connectors and Headers

Product Facts

- **Connectors and headers for 2 through 28 positions; wire sizes of 22, 24, 26 and 28 AWG [0.4-0.08 mm²]**
- **Wire-to-Post Connectors preloaded with dual beam contacts**
- **Connectors and headers, except shrouded headers, are end-to-end stackable**
- **Connector styles include both closed end and feed-thru connectors with locking ramps, with and without polarizing tabs**
- **Molded ribs on housing do not allow reverse mating**
- **Posted connectors for 2 through 19 positions**
- **Connectors preloaded with IDC contacts**
- **All contacts are slotted for insulation displacement (IDC) terminal technique**
- **Contacts are lubricated for fretting corrosion protection**
- **Benefits derived from the MTA-100 system include increased quality and ease of handling such as—**
  - **One-step assembly**
  - **No wire stripping**
  - **No contact damage**
  - **Reduced wiring errors**
  - **Simpler tooling**
  - **Simple maintenance and repair**
- **Meets the material requirements of Table 23.1 of UL1410 Standards for Television Receiver and Video Products (wire-to-post connectors only)**
- **Recognized under the Component Program of Underwriters Laboratories Inc., File No. E28476**
- **Certified by Canadian Standards Association, File No. LR7189**

Technical Documents

Product Specification
108-1050 MTA-100 Connectors

Application Specifications
114-1019 MTA-100 Connectors
114-1031 MTA-100 Ribbon Cable Assembly

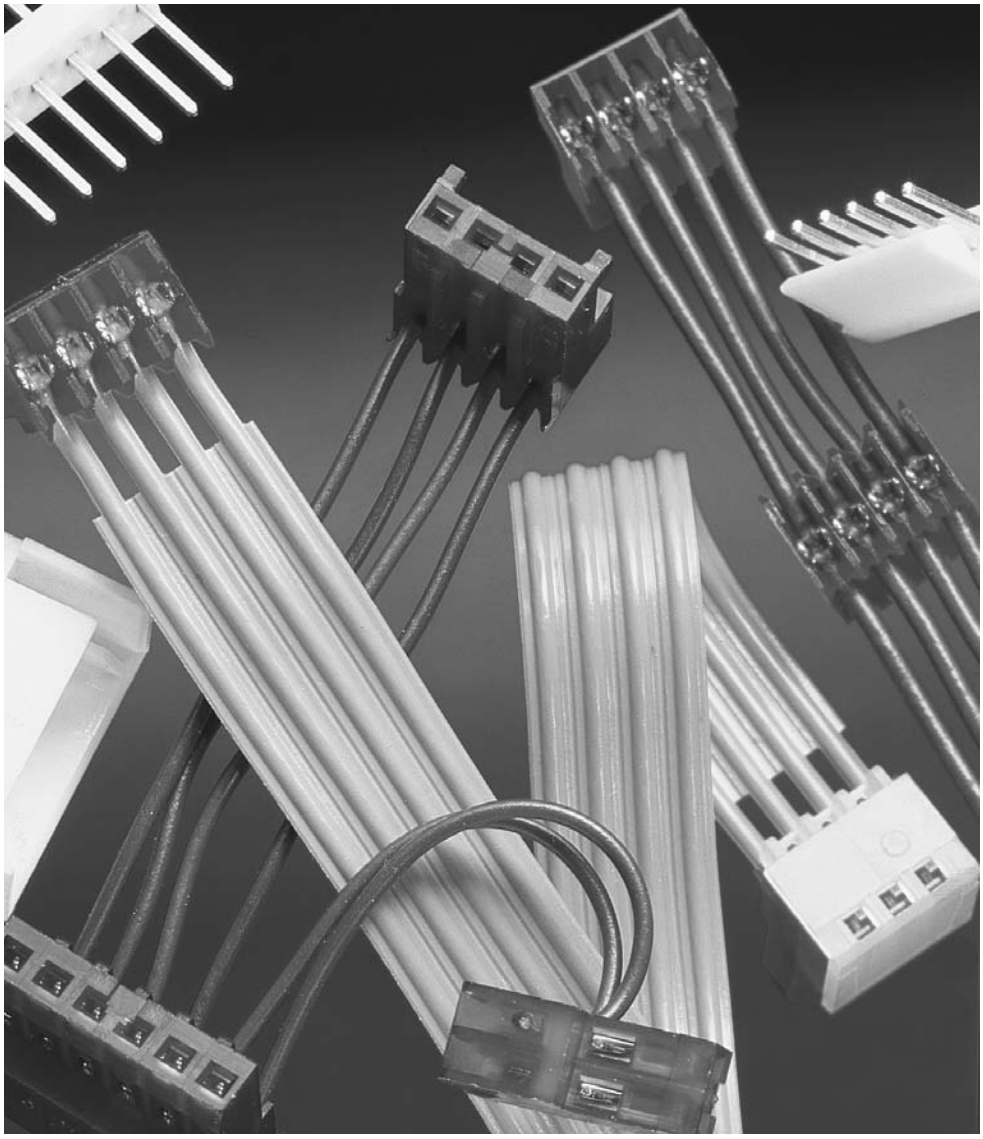

MTA-100 connectors accept discrete and ribbon cable wire sizes ranging from 22–28 AWG [0.4–0.08 mm²] with maximum insulation outside diameter of .060 [1.52] for terminating single wire and .050 [1.27] for mass termination of wires. Tin plated solid, fused stranded, or stranded (7 strands) wire with PVC insulation can be used on 22–28 AWG [0.4–0.9 mm²] MTA-100 connectors and 19 stranded wire on 22–24 AWG [0.4–0.2 mm²] MTA-100 connectors. Only one wire to be terminated into an IDC contact slot.

The wire-to-post connector housing material is flame retardant thermoplastic, either UL94V-2 or UL94V-0 rated.

A full line of .100 [2.54] centerline headers completes the system. Headers are available with straight or right-angle posts, in flat, polarized or friction lock styles. Headers are available in 2 through 28 positions. Shrouded headers are available in 2 through 14 positions.

Performance Data*

Voltage Rating—250 vac
Current Rating—5 amp max.
Low-Level Resistance—6 mΩ max. initial
Dielectric Withstanding Voltage—750 vac/1 min.
Insulation Resistance—5000 MΩ min. initial
Operating Temperature—−55° C to +105° C

Note: Refer to page 70 for approved wire listings.

*Refer to the Product Specification for additional electrical, mechanical and environmental performance tests and requirements.

Catalog 82056
Revised 6-08

www.tycoelectronics.com

Dimensions are in inches and millimeters unless otherwise specified. Values in brackets are metric equivalents.

Dimensions are shown for reference purposes only. Specifications subject to change.

USA: 1-800-522-6752
Canada: 1-905-470-4425
Mexico: 52-55-1106-0800
C. America: 57-1-254-4444

South America: 55-11-2103-6000
Hong Kong: 852-2735-1628
Japan: 81-44-844-8013
UK: 44-208-420-8341

MTA-100 Connector/Header Mateability Guide

This matrix has been prepared to assist you, our customer, in defining the correct mating halves for the MTA-100 header and connector combination. Where a "Y" is indicated the combination is a valid mating pair. Where an "N" is indicated the combination is not acceptable for mating.

Matrix for Tin Plated Part Numbers

Headers

Connectors

	640452	640453	640454	640455	640456	640457	644456	644457	644486	644488	644694	644695	644803	644861	644874	644875	644876	644877	644892	644893	644894	647047	647048	647050	647051	647106	647166	647502	647531	647609	647623	647532	1744075
640440	Y	Y	Y	Y	Y	Y	Y	Y	Y	Y	Y	Y	Y	Y	Y	Y	Y	Y	N	N	N	Y	Y	Y	Y	Y	Y	Y	Y	Y	Y	Y	Y
640441	Y	Y	Y	Y	Y	Y	Y	Y	Y	Y	Y	Y	Y	Y	Y	Y	Y	Y	N	N	N	Y	Y	Y	Y	Y	Y	Y	Y	Y	Y	Y	Y
640442	Y	Y	Y	Y	Y	Y	Y	Y	Y	Y	Y	Y	Y	Y	Y	Y	Y	Y	N	N	N	Y	Y	Y	Y	Y	Y	Y	Y	Y	Y	Y	Y
640443	Y	Y	Y	Y	Y	Y	Y	Y	Y	Y	Y	Y	Y	Y	Y	Y	Y	Y	N	N	N	Y	Y	Y	Y	Y	Y	Y	Y	Y	Y	Y	Y
640468	Y	Y	Y	Y	Y	Y	Y	Y	Y	Y	Y	Y	Y	Y	Y	Y	Y	Y	N	N	N	Y	Y	Y	Y	Y	Y	Y	Y	Y	Y	Y	Y
640469	Y	Y	Y	Y	Y	Y	Y	Y	Y	Y	Y	Y	Y	Y	Y	Y	Y	Y	N	N	N	Y	Y	Y	Y	Y	Y	Y	Y	Y	Y	Y	Y
640470	Y	Y	Y	Y	Y	Y	Y	Y	Y	Y	Y	Y	Y	Y	Y	Y	Y	Y	N	N	N	Y	Y	Y	Y	Y	Y	Y	Y	Y	Y	Y	Y
640471	Y	Y	Y	Y	Y	Y	Y	Y	Y	Y	Y	Y	Y	Y	Y	Y	Y	Y	N	N	N	Y	Y	Y	Y	Y	Y	Y	Y	Y	Y	Y	Y
640620	Y	Y	Y	Y	Y	Y	Y	Y	Y	Y	Y	Y	Y	Y	Y	Y	Y	Y	N	N	N	Y	Y	Y	Y	Y	Y	Y	Y	Y	Y	Y	Y
640621	Y	Y	Y	Y	Y	Y	Y	Y	Y	Y	Y	Y	Y	Y	Y	Y	Y	Y	N	N	N	Y	Y	Y	Y	Y	Y	Y	Y	Y	Y	Y	Y
640622	Y	Y	Y	Y	Y	Y	Y	Y	Y	Y	Y	Y	Y	Y	Y	Y	Y	Y	N	N	N	Y	Y	Y	Y	Y	Y	Y	Y	Y	Y	Y	Y
640623	Y	Y	Y	Y	Y	Y	Y	Y	Y	Y	Y	Y	Y	Y	Y	Y	Y	Y	N	N	N	Y	Y	Y	Y	Y	Y	Y	Y	Y	Y	Y	Y
641311	Y	Y	Y	Y	Y	Y	Y	Y	Y	Y	Y	Y	Y	Y	Y	Y	Y	Y	N	N	N	Y	Y	Y	Y	Y	Y	Y	Y	Y	Y	Y	Y
641312	Y	Y	Y	Y	Y	Y	Y	Y	Y	Y	Y	Y	Y	Y	Y	Y	Y	Y	N	N	N	Y	Y	Y	Y	Y	Y	Y	Y	Y	Y	Y	Y
641313	Y	Y	Y	Y	Y	Y	Y	Y	Y	Y	Y	Y	Y	Y	Y	Y	Y	Y	N	N	N	Y	Y	Y	Y	Y	Y	Y	Y	Y	Y	Y	Y
641314	Y	Y	Y	Y	Y	Y	Y	Y	Y	Y	Y	Y	Y	Y	Y	Y	Y	Y	N	N	N	Y	Y	Y	Y	Y	Y	Y	Y	Y	Y	Y	Y
641534	Y	Y	Y	Y	Y	Y	Y	Y	Y	Y	Y	Y	Y	Y	Y	Y	Y	Y	N	N	N	Y	Y	Y	Y	Y	Y	Y	Y	Y	Y	Y	Y
641535	Y	Y	Y	Y	Y	Y	Y	Y	Y	Y	Y	Y	Y	Y	Y	Y	Y	Y	N	N	N	Y	Y	Y	Y	Y	Y	Y	Y	Y	Y	Y	Y
641536	Y	Y	Y	Y	Y	Y	Y	Y	Y	Y	Y	Y	Y	Y	Y	Y	Y	Y	N	N	N	Y	Y	Y	Y	Y	Y	Y	Y	Y	Y	Y	Y
641537	Y	Y	Y	Y	Y	Y	Y	Y	Y	Y	Y	Y	Y	Y	Y	Y	Y	Y	N	N	N	Y	Y	Y	Y	Y	Y	Y	Y	Y	Y	Y	Y
641653	Y	Y	Y	Y	Y	Y	Y	Y	Y	Y	Y	Y	Y	Y	Y	Y	Y	Y	N	N	N	Y	Y	Y	Y	Y	Y	Y	Y	Y	Y	Y	Y
641654	Y	Y	Y	Y	Y	Y	Y	Y	Y	Y	Y	Y	Y	Y	Y	Y	Y	Y	N	N	N	Y	Y	Y	Y	Y	Y	Y	Y	Y	Y	Y	Y
641655	Y	Y	Y	Y	Y	Y	Y	Y	Y	Y	Y	Y	Y	Y	Y	Y	Y	Y	N	N	N	Y	Y	Y	Y	Y	Y	Y	Y	Y	Y	Y	Y
641656	Y	Y	Y	Y	Y	Y	Y	Y	Y	Y	Y	Y	Y	Y	Y	Y	Y	Y	N	N	N	Y	Y	Y	Y	Y	Y	Y	Y	Y	Y	Y	Y
643498	Y	Y	Y	Y	Y	Y	Y	Y	Y	Y	Y	Y	Y	Y	Y	Y	Y	Y	N	N	N	Y	Y	Y	Y	Y	Y	Y	Y	Y	Y	Y	Y
643813	Y	Y	Y	Y	Y	Y	Y	Y	Y	Y	Y	Y	Y	Y	Y	Y	Y	Y	N	N	N	Y	Y	Y	Y	Y	Y	Y	Y	Y	Y	Y	Y
643814	Y	Y	Y	Y	Y	Y	Y	Y	Y	Y	Y	Y	Y	Y	Y	Y	Y	Y	N	N	N	Y	Y	Y	Y	Y	Y	Y	Y	Y	Y	Y	Y
643815	Y	Y	Y	Y	Y	Y	Y	Y	Y	Y	Y	Y	Y	Y	Y	Y	Y	Y	N	N	N	Y	Y	Y	Y	Y	Y	Y	Y	Y	Y	Y	Y
643816	Y	Y	Y	Y	Y	Y	Y	Y	Y	Y	Y	Y	Y	Y	Y	Y	Y	Y	N	N	N	Y	Y	Y	Y	Y	Y	Y	Y	Y	Y	Y	Y
643828	Y	Y	Y	Y	Y	Y	Y	Y	Y	Y	Y	Y	Y	Y	Y	Y	Y	Y	N	N	N	Y	Y	Y	Y	Y	Y	Y	Y	Y	Y	Y	Y
644083	Y	Y	Y	Y	Y	Y	Y	Y	Y	Y	Y	Y	Y	Y	Y	Y	Y	Y	N	N	N	Y	Y	Y	Y	Y	Y	Y	Y	Y	Y	Y	Y
644312	Y	Y	Y	Y	Y	Y	Y	Y	Y	Y	Y	Y	Y	Y	Y	Y	Y	Y	N	N	N	Y	Y	Y	Y	Y	Y	Y	Y	Y	Y	Y	Y
644313	Y	Y	Y	Y	Y	Y	Y	Y	Y	Y	Y	Y	Y	Y	Y	Y	Y	Y	N	N	N	Y	Y	Y	Y	Y	Y	Y	Y	Y	Y	Y	Y
644497	Y	Y	Y	Y	Y	Y	Y	Y	Y	Y	Y	Y	Y	Y	Y	Y	Y	Y	N	N	N	Y	Y	Y	Y	Y	Y	Y	Y	Y	Y	Y	Y
644511	Y	Y	Y	Y	Y	Y	Y	Y	Y	Y	Y	Y	Y	Y	Y	Y	Y	Y	N	N	N	Y	Y	Y	Y	Y	Y	Y	Y	Y	Y	Y	Y
644512	Y	Y	Y	Y	Y	Y	Y	Y	Y	Y	Y	Y	Y	Y	Y	Y	Y	Y	N	N	N	Y	Y	Y	Y	Y	Y	Y	Y	Y	Y	Y	Y
644513	Y	Y	Y	Y	Y	Y	Y	Y	Y	Y	Y	Y	Y	Y	Y	Y	Y	Y	N	N	N	Y	Y	Y	Y	Y	Y	Y	Y	Y	Y	Y	Y
644514	Y	Y	Y	Y	Y	Y	Y	Y	Y	Y	Y	Y	Y	Y	Y	Y	Y	Y	N	N	N	Y	Y	Y	Y	Y	Y	Y	Y	Y	Y	Y	Y
644540	Y	Y	Y	Y	Y	Y	Y	Y	Y	Y	Y	Y	Y	Y	Y	Y	Y	Y	N	N	N	Y	Y	Y	Y	Y	Y	Y	Y	Y	Y	Y	Y
644563	Y	Y	Y	Y	Y	Y	Y	Y	Y	Y	Y	Y	Y	Y	Y	Y	Y	Y	N	N	N	Y	Y	Y	Y	Y	Y	Y	Y	Y	Y	Y	Y
644564	Y	Y	Y	Y	Y	Y	Y	Y	Y	Y	Y	Y	Y	Y	Y	Y	Y	Y	N	N	N	Y	Y	Y	Y	Y	Y	Y	Y	Y	Y	Y	Y
644565	Y	Y	Y	Y	Y	Y	Y	Y	Y	Y	Y	Y	Y	Y	Y	Y	Y	Y	N	N	N	Y	Y	Y	Y	Y	Y	Y	Y	Y	Y	Y	Y
644574	Y	Y	Y	Y	Y	Y	Y	Y	Y	Y	Y	Y	Y	Y	Y	Y	Y	Y	N	N	N	Y	Y	Y	Y	Y	Y	Y	Y	Y	Y	Y	Y
644575	Y	Y	Y	Y	Y	Y	Y	Y	Y	Y	Y	Y	Y	Y	Y	Y	Y	Y	N	N	N	Y	Y	Y	Y	Y	Y	Y	Y	Y	Y	Y	Y
644576	Y	Y	Y	Y	Y	Y	Y	Y	Y	Y	Y	Y	Y	Y	Y	Y	Y	Y	N	N	N	Y	Y	Y	Y	Y	Y	Y	Y	Y	Y	Y	Y
644577	Y	Y	Y	Y	Y	Y	Y	Y	Y	Y	Y	Y	Y	Y	Y	Y	Y	Y	N	N	N	Y	Y	Y	Y	Y	Y	Y	Y	Y	Y	Y	Y
644578	Y	Y	Y	Y	Y	Y	Y	Y	Y	Y	Y	Y	Y	Y	Y	Y	Y	Y	N	N	N	Y	Y	Y	Y	Y	Y	Y	Y	Y	Y	Y	Y
644579	Y	Y	Y	Y	Y	Y	Y	Y	Y	Y	Y	Y	Y	Y	Y	Y	Y	Y	N	N	N	Y	Y	Y	Y	Y	Y	Y	Y	Y	Y	Y	Y
644795	Y	Y	Y	Y	Y	Y	Y	Y	Y	Y	Y	Y	Y	Y	Y	Y	Y	Y	N	N	N	Y	Y	Y	Y	Y	Y	Y	Y	Y	Y	Y	Y
*1375820	Y	Y	Y	Y	Y	Y	Y	N	N	Y	Y	N	N	Y	Y	Y	Y	Y	Y	Y	Y	Y	Y	Y	Y	Y	Y	Y	Y	Y	Y	Y	Y

*Select contact plating to match header plating.

Catalog 82056
Revised 6-08

www.tycoelectronics.com

Dimensions are in inches and millimeters unless otherwise specified. Values in brackets are metric equivalents.

Dimensions are shown for reference purposes only. Specifications subject to change.

USA: 1-800-522-6752
Canada: 1-905-470-4425
Mexico: 52-55-1106-0800
C. America: 57-1-254-4444

South America: 55-11-2103-6000
Hong Kong: 852-2735-1628
Japan: 81-44-844-8013
UK: 44-208-420-8341

MTA-100 Connector/Header Mateability Guide (Continued)

This matrix has been prepared to assist you, our customer, in defining the correct mating halves for the MTA-100 header and connector combination. Where a "Y" is indicated the combination is a valid mating pair. Where an "N" is indicated the combination is not acceptable for mating.

Matrix for .000030 [0.00076] Gold Plated Part Numbers

Headers

Connectors

	641211	641212	641213	641214	641215	641216	644487	644489	644884	644885	644886	644887	644896	644897	644898	647108	647109	647114	647116	647117	647168	647626	647624	647534	1744047	1744163
641237	Y	Y	Y	Y	Y	Y	Y	Y	Y	Y	Y	Y	N	N	N	Y	Y	Y	Y	Y	Y	Y	Y	Y	Y	Y
641238	Y	Y	Y	Y	Y	Y	Y	Y	Y	Y	Y	Y	N	N	N	Y	Y	Y	Y	Y	Y	Y	Y	Y	Y	Y
641239	Y	Y	Y	Y	Y	Y	Y	Y	Y	Y	Y	Y	N	N	N	Y	Y	Y	Y	Y	Y	Y	Y	Y	Y	Y
641240	Y	Y	Y	Y	Y	Y	Y	Y	Y	Y	Y	Y	N	N	N	Y	Y	Y	Y	Y	Y	Y	Y	Y	Y	Y
641241	Y	Y	Y	Y	Y	Y	Y	Y	Y	Y	Y	Y	N	N	N	Y	Y	Y	Y	Y	Y	Y	Y	Y	Y	Y
641242	Y	Y	Y	Y	Y	Y	Y	Y	Y	Y	Y	Y	N	N	N	Y	Y	Y	Y	Y	Y	Y	Y	Y	Y	Y
641243	Y	Y	Y	Y	Y	Y	Y	Y	Y	Y	Y	Y	N	N	N	Y	Y	Y	Y	Y	Y	Y	Y	Y	Y	Y
641244	Y	Y	Y	Y	Y	Y	Y	Y	Y	Y	Y	Y	N	N	N	Y	Y	Y	Y	Y	Y	Y	Y	Y	Y	Y
644020	Y	Y	Y	Y	Y	Y	Y	Y	Y	Y	Y	Y	N	N	N	Y	Y	Y	Y	Y	Y	Y	Y	Y	Y	Y
644042	Y	Y	Y	Y	Y	Y	Y	Y	Y	Y	Y	N	N	N	Y	Y	Y	Y	Y	Y	Y	Y	Y	Y	Y	Y
644043	Y	Y	Y	Y	Y	Y	Y	Y	Y	Y	Y	Y	N	N	N	Y	Y	Y	Y	Y	Y	Y	Y	Y	Y	Y
644044	Y	Y	Y	Y	Y	Y	Y	Y	Y	Y	Y	Y	N	N	N	Y	Y	Y	Y	Y	Y	Y	Y	Y	Y	Y
644702	Y	Y	Y	Y	Y	Y	Y	Y	Y	Y	Y	Y	N	N	N	Y	Y	Y	Y	Y	Y	Y	Y	Y	Y	Y
644726	Y	Y	Y	Y	Y	Y	Y	Y	Y	Y	Y	Y	N	N	N	Y	Y	Y	Y	Y	Y	Y	Y	Y	Y	Y
*1375820	Y	Y	Y	Y	Y	Y	N	N	Y	Y	Y	Y	Y	Y	Y	Y	Y	Y	Y	Y	Y	Y	Y	Y	Y	Y

Matrix for .000015 [0.00038] Gold Plated Part Numbers

Headers

Connectors

	641122	641123	641124	641125	641126	641127	644888	644889	644890	644891	647075	647076	647078	647079	647107	647167	647467	647625	647627	647533	1744074
641190	Y	Y	Y	Y	Y	Y	Y	Y	Y	Y	Y	Y	Y	Y	Y	Y	Y	Y	Y	Y	Y
641191	Y	Y	Y	Y	Y	Y	Y	Y	Y	Y	Y	Y	Y	Y	Y	Y	Y	Y	Y	Y	Y
641192	Y	Y	Y	Y	Y	Y	Y	Y	Y	Y	Y	Y	Y	Y	Y	Y	Y	Y	Y	Y	Y
641193	Y	Y	Y	Y	Y	Y	Y	Y	Y	Y	Y	Y	Y	Y	Y	Y	Y	Y	Y	Y	Y
641198	Y	Y	Y	Y	Y	Y	Y	Y	Y	Y	Y	Y	Y	Y	Y	Y	Y	Y	Y	Y	Y
641199	Y	Y	Y	Y	Y	Y	Y	Y	Y	Y	Y	Y	Y	Y	Y	Y	Y	Y	Y	Y	Y
641200	Y	Y	Y	Y	Y	Y	Y	Y	Y	Y	Y	Y	Y	Y	Y	Y	Y	Y	Y	Y	Y
641201	Y	Y	Y	Y	Y	Y	Y	Y	Y	Y	Y	Y	Y	Y	Y	Y	Y	Y	Y	Y	Y
644038	Y	Y	Y	Y	Y	Y	Y	Y	Y	Y	Y	Y	Y	Y	Y	Y	Y	Y	Y	Y	Y
644040	Y	Y	Y	Y	Y	Y	Y	Y	Y	Y	Y	Y	Y	Y	Y	Y	Y	Y	Y	Y	Y
647477	Y	Y	Y	Y	Y	Y	Y	Y	Y	Y	Y	Y	Y	Y	Y	Y	Y	Y	Y	Y	Y
647480	Y	Y	Y	Y	Y	Y	Y	Y	Y	Y	Y	Y	Y	Y	Y	Y	Y	Y	Y	Y	Y
*1375820	N	N	N	N	N	N	N	N	N	N	N	N	N	N	N	N	N	N	N	Y	Y
1744020	Y	Y	Y	Y	Y	Y	Y	Y	Y	Y	Y	Y	Y	Y	Y	Y	Y	Y	Y	Y	Y

*Select contact plating to match header plating.

Catalog 82056
Revised 6-08

www.tycoelectronics.com

Dimensions are in inches and millimeters unless otherwise specified. Values in brackets are metric equivalents.

Dimensions are shown for reference purposes only. Specifications subject to change.

USA: 1-800-522-6752
Canada: 1-905-470-4425
Mexico: 52-55-1106-0800
C. America: 57-1-254-4444

South America: 55-11-2103-6000
Hong Kong: 852-2735-1628
Japan: 81-44-844-8013
UK: 44-208-420-8341

MTA-100 IDC Connectors—Closed End and Feed-Thru

Material and Finish

Housing — UL94V-2 rated, nylon, see below for color; or UL94V-0 rated, nylon, black

Contacts — Phosphor bronze, post tin plated, .000030 [0.00076] or .000015 [0.00038] post gold-plated over nickel

Color Coding by Wire Size for UL94V-2 Connectors

28 AWG — Green
26 AWG — Blue
24 AWG — White
22 AWG — Red

All wire sizes in UL94V-0 — Black

For mateability options, see matrix on pages 12 and 13.

For mating half visuals, see pages 20 thru 30.

Notes:

1. Refer to pages 70-74 for approved wire listing.
2. For strain reliefs and dust covers, see page 16.
3. For keying plugs, see page 17.
4. Other circuit sizes are available upon request. Minimums may apply.
5. Connector circuits can be molded closed for keying purposes. Minimums may apply.
6. Where no part numbers appear in the chart, parts can be made available upon request. Minimums may apply.
7. To determine connector overall length (dim. A), multiply .100 x the number of circuits. Example: .100 x 10 circuits equals 1.000 inch [25.4 mm].

Closed End Connectors

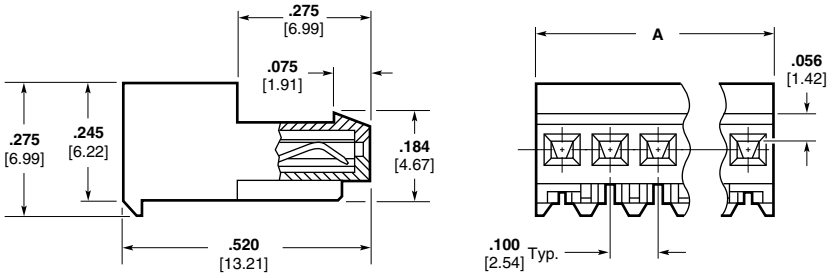

Without Polarizing Tabs

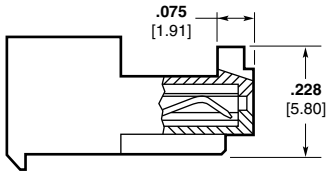

With Polarizing Tabs

Feed-Thru Connectors

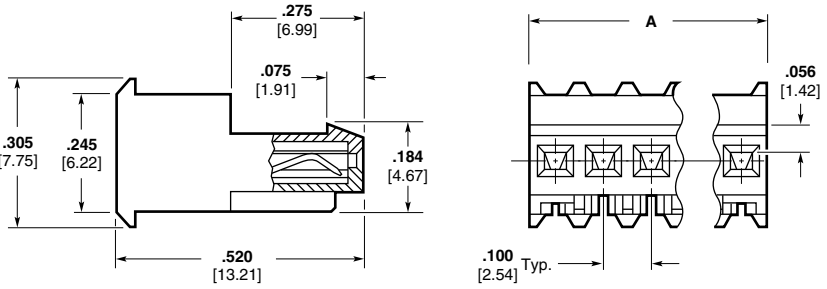

Without Polarizing Tabs

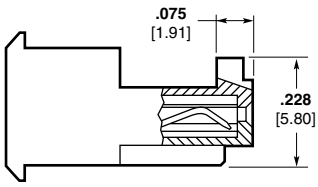

With Polarizing Tabs

Catalog 82056
Revised 6-08

www.tycoelectronics.com

Dimensions are in inches and millimeters unless otherwise specified. Values in brackets are metric equivalents.

Dimensions are shown for reference purposes only. Specifications subject to change.

USA: 1-800-522-6752
Canada: 1-905-470-4425
Mexico: 52-55-1106-0800
C. America: 57-1-254-4444

South America: 55-11-2103-6000
Hong Kong: 852-2735-1628
Japan: 81-44-844-8013
UK: 44-208-420-8341

MTA-100 IDC Connectors—Closed End and Feed-Thru (Continued)

Connector Ordering Information

The "Base Part Numbers" Chart at right shows the base part number, and their RoHS (Restrictions on Certain Hazardous Substances) Compliant (lead free) equivalent available for the described connectors.

Prefixes and suffixes are determined by the number of circuit positions in the connector. For example, the complete part number for a 10-position closed end connector without polarizing tabs for 22 AWG wire would be:

Base number **640440** plus prefix-and-suffix
4- — **-0**

The correct ordering number is **4-640440-0**

All part numbers are the RoHS equivalent version. Example:

No. of Pos.	Lead Free RoHS Prefix/Suffix
2	3-640440-2
3	3-640440-3
4	3-640440-4
5	3-640440-5
6	3-640440-6
7	3-640440-7
8	3-640440-8
9	3-640440-9
10	4-640440-0
11	4-640440-1
12	4-640440-2
13	4-640440-3
14	4-640440-4
15	4-640440-5
16	4-640440-6
17	4-640440-7
18	4-640440-8
19	4-640440-9
20	5-640440-0
21	5-640440-1
22	5-640440-2
23	5-640440-3
24	5-640440-4
25	5-640440-5
26	5-640440-6
27	5-640440-7
28	5-640440-8

Note: All RoHS equivalent part numbers may not be available upon catalog release. If the number you need is not available, please contact Product Engineering to expedite your request.

Base Part Numbers

Connector Type & Wire Size	Closed End				Feed-Thru			
	Without Tabs		With Tabs		Without Tabs		With Tabs	
	Connector Part Nos.	RoHS Equiv.	Connector Part Nos.	RoHS Equiv.	Connector Part Nos.	RoHS Equiv.	Connector Part Nos.	RoHS Equiv.
Standard UL94V-2, Tin Plated								
22 AWG 0.3–0.4 mm²	640440	**32–58**	643813	**32–58**	640620	**32–58**	644540[1]	**32–45**
24 AWG 0.2 mm²	640441	**32–58**	643814	**32–58**	640621	**32–58**	644563[1]	**32–54**
26 AWG 0.12–0.15 mm²	640442	**32–58**	643815	**32–58**	640622	**32–58**	644564[1]	**32–45**
28 AWG 0.08–0.09 mm²	640443	**32–58**	643816	**32–58**	640623	**32–58**	644565[1]	**32–45**
Tape Mounted on Reel UL94V-2, Tin Plated								
22 AWG 0.3–0.4 mm²	640468	**32–58**	644511	**42–68**	641311	**32–58**	—	—
24 AWG 0.2 mm²	640469	**32–58**	644512	**32–58**	641312	**32–58**	—	—
26 AWG 0.12–0.15 mm²	640470	**32–58**	644513	**32–58**	641313	**32–58**	—	—
28 AWG 0.08–0.09 mm²	640471	**32–58**	644514	**32–58**	641314	**32–58**	—	—
Standard UL94V-2, .000030 [0.00076] Gold Plated								
22 AWG 0.3–0.4 mm²	641237	**32–58**	644042	**32–58**	641241	**32–58**	644702[1]	**32–45**
24 AWG 0.2 mm²	641238	**32–58**	644020	**32–58**	641242	**32–58**	—	—
26 AWG 0.12–0.15 mm²	641239	**32–58**	644043[1]	**32–44**	641243	**32–58**	644726[1]	**32–45**
28 AWG 0.8–0.9 mm²	641240	**32–58**	644044[1]	**32–44**	641244	**32–58**	—	—
Standard UL94V-2, .000015 [0.00038] Gold Plated								
22 AWG 0.3–0.4 mm²	641190	**32–58**	644038[1]	**32–44**	641198	**32–58**	647477	**32–46**
24 AWG 0.2 mm²	641191	**32–58**	1744020[1]	**32–44**	641199	**32–58**	—	—
26 AWG 0.12–0.15 mm²	641192	**32–58**	644040[1]	**32–44**	641200	**32–58**	647480	**32–43**
28 AWG 0.08–0.09 mm²	641193	**32–58**	—	—	641201	**32–58**	—	—
LED*, UL94V-2, Tin Plated (See Note 1)								
22 AWG 0.3–0.4 mm²	641534	**32–33**	—	—	641653	**32–33**	—	—
24 AWG 0.2 mm²	641535	**32–33**	644795	**32–33**	641654	**32–33**	—	—
26 AWG 0.12–0.15 mm²	641536	**32–33**	—	—	641655	**32–33**	—	—
28 AWG 0.08–0.09 mm²	641537	**32–33**	—	—	641656	**32–33**	—	—
Standard UL94V-0, Tin Plated (Gold is available, minimums may apply.) (Black in color)								
22 AWG 0.3–0.4 mm²	643498[1]	**32–45**	644083[1]	**32–45**	644575[1]	**32–45**	644578[1]	**32–45**
24 AWG 0.2 mm²	644574[1]	**32–45**	644312[1]	**32–45**	644576[1]	**32–45**	644579[1]	**32–45**
26 AWG 0.12–0.15 mm²	643828[1]	**32–45**	644313[1]	**32–45**	644577[1]	**32–45**	644497[1]	**32–45**

*LED connectors are designed to mate with .014–.020 [0.36–0.51] diameter posts or square leads.
[1] Other circuit sizes are available upon request. Minimums may apply.
[2] Tape mounted.

Note: Blocked circuit configurations are available. Contact product engineer or product manager for details. Minimums may apply.

Catalog 82056
Revised 6-08

www.tycoelectronics.com

Dimensions are in inches and millimeters unless otherwise specified. Values in brackets are metric equivalents.

Dimensions are shown for reference purposes only. Specifications subject to change.

USA: 1-800-522-6752
Canada: 1-905-470-4425
Mexico: 52-55-1106-0800
C. America: 57-1-254-4444

South America: 55-11-2103-6000
Hong Kong: 852-2735-1628
Japan: 81-44-844-8013
UK: 44-208-420-8341

MTA-100 IDC Connector Accessories

Covers

Material (RoHS Compliant)

Strain Relief Cover — UL94V-2 rated, nylon, white

Dust Covers — UL94V-0 rated, polyester, white

Closed End Strain Relief Covers

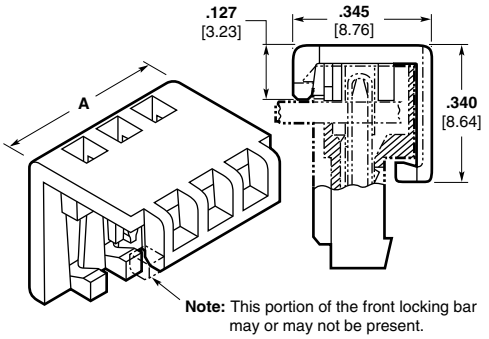

Note: This portion of the front locking bar may or may not be present.

Closed End Dust Covers

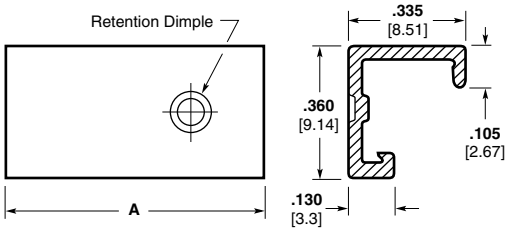

Feed-Thru Strain Relief Covers

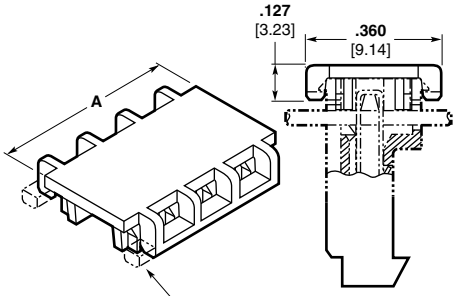

Note: This portion of the front locking bar may or may not be present.

Feed-Thru Dust Covers

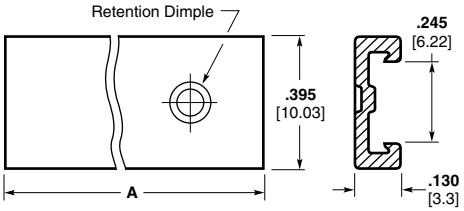

Cover Ordering Information

The "Base Part Numbers" Chart at right shows the base part number and number of circuits available for the described cover.

Prefixes and suffixes are determined by the number of circuit positions in the cover. For example, the complete part number for a 10-position closed end strain relief cover would be:

Base number **643075** plus prefix-and-suffix

1- — -0

The correct ordering number is

1-643075-0

Base Part Numbers

Closed End				Feed-Thru			
Strain Relief Covers		Dust Covers		Strain Relief Covers		Dust Covers	
Cover Part Nos.	No. of Circuits	Cover Part Nos.	No. of Circuits	Cover Part Nos.	No. of Circuits	Cover Part Nos.	No. of Circuits
643075	2–28	640550	2–28	643077	2–28	640642	3-28

Cover Length

No. of Circuits	Dim. A	Prefix/ Suffix
2	**.200** 5.08	-2
3	**.300** 7.62	-3
4	**.400** 10.16	-4
5	**.500** 12.7	-5
6	**.600** 15.24	-6
7	**.700** 17.78	-7
8	**.800** 20.32	-8

No. of Circuits	Dim. A	Prefix/ Suffix
9	**.900** 22.86	-9
10	**1.00** 25.4	1- -0
11	**1.100** 27.94	1- -1
12	**1.200** 30.48	1- -2
13	**1.300** 33.02	1- -3
14	**1.400** 35.56	1- -4
15	**1.500** 38.1	1- -5

No. of Circuits	Dim. A	Prefix/ Suffix
16	**1.600** 40.64	1- -6
17	**1.700** 43.18	1- -7
18	**1.800** 45.72	1- -8
19	**1.900** 48.26	1- -9
20	**2.000** 50.8	2- -0
21	**2.100** 53.34	2- -1
22	**2.200** 55.88	2- -2

No. of Circuits	Dim. A	Prefix/ Suffix
23	**2.300** 58.42	2- -3
24	**2.400** 60.96	2- -4
25	**2.500** 63.5	2- -5
26	**2.600** 66.04	2- -6
27	**2.700** 68.58	2- -7
28	**2.800** 71.12	2- -8

Catalog 82056
Revised 6-08

www.tycoelectronics.com

Dimensions are in inches and millimeters unless otherwise specified. Values in brackets are metric equivalents.

Dimensions are shown for reference purposes only. Specifications subject to change.

USA: 1-800-522-6752
Canada: 1-905-470-4425
Mexico: 52-55-1106-0800
C. America: 57-1-254-4444

South America: 55-11-2103-6000
Hong Kong: 852-2735-1628
Japan: 81-44-844-8013
UK: 44-208-420-8341

MTA-100 IDC Connector Accessories (Continued)

Keying Plug with Carrier Strip (10 plugs per strip)

Part No. 641994-1

Material (RoHS Compliant)

UL94V-2 rated, nylon, natural color

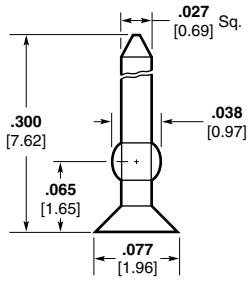

Note: Removal of contact is not necessary when using keying plug.

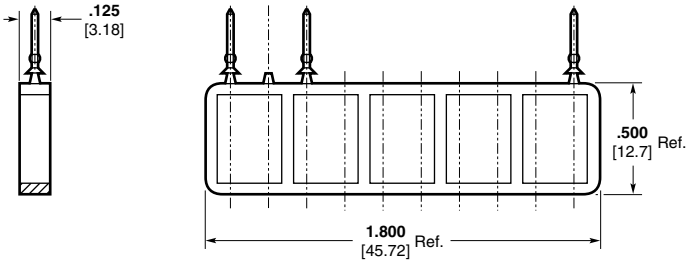

Replacement IDC Contacts

Material and Finish

Phosphor bronze, post tin plated; .000030 [0.00076] or .000015 [0.00038] post gold plated over nickel

Wire Size		Part Numbers			
AWG	mm²	Standard Tin Plated	.000030 [0.00076] Gold Plated	.000015 [0.00038] Gold Plated	LED Tin Plated
22	0.3–0.4	640636-3	641186-4	641186-3	641643-2
24	0.2	640637-3	641187-4	641187-3	641644-2
26	0.12–0.15	640638-3	641188-4	641188-3	641645-2
28	0.08–0.09	640639-2	641189-4	641189-3	641646-2

Note: Tyco Electronics does not recommend terminating an MTA contact more than one time. Use replacement contacts when required for field repairs or wire changes.

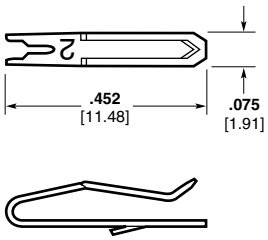

Crimp Snap-In Contacts

Material and Finish

Phosphor bronze, tin plated

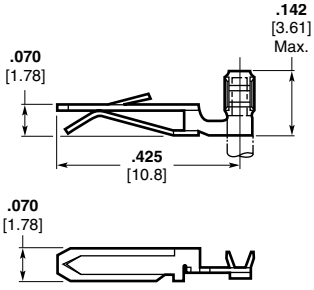

Wire Size		Part Nos.	
AWG	mm²	Loose Piece*	Strip**
26-22	0.12–0.4	640709-2	640708-2

**Hand Tool No. 59836-1 (IS 408-6527)
**Applicator No. 466747-1 (IS 408-8040)

Special applications for crimp snap-in contacts are:
1. Double wire per contact
2. Coax or shielded wire
3. Mixed wire size in same connector

Note: Only one crimp snap-in contact per connector.

Catalog 82056
Revised 6-08

www.tycoelectronics.com

Dimensions are in inches and millimeters unless otherwise specified. Values in brackets are metric equivalents.

Dimensions are shown for reference purposes only. Specifications subject to change.

USA: 1-800-522-6752
Canada: 1-905-470-4425
Mexico: 52-55-1106-0800
C. America: 57-1-254-4444

South America: 55-11-2103-6000
Hong Kong: 852-2735-1628
Japan: 81-44-844-8013
UK: 44-208-420-8341

MTA-100 Posted Connector/Connector Mateability Guide

This matrix has been prepared to assist you, our customer, in defining the correct mating halves for the MTA-100 posted connector and connector combination. Where a "Y" is indicated the combination is a valid mating pair. Where an "N" is indicated the combination is not acceptable for mating.

Matrix for Tin Plated Part Numbers

Posted Connectors

Connectors

	647000	647001	647002	647003	647004	647005	647006	647007
640440	Y	Y	Y	Y	Y	Y	Y	Y
640441	Y	Y	Y	Y	Y	Y	Y	Y
640442	Y	Y	Y	Y	Y	Y	Y	Y
640443	Y	Y	Y	Y	Y	Y	Y	Y
640468	Y	Y	Y	Y	Y	Y	Y	Y
640469	Y	Y	Y	Y	Y	Y	Y	Y
640470	Y	Y	Y	Y	Y	Y	Y	Y
640471	Y	Y	Y	Y	Y	Y	Y	Y
640620	Y	Y	Y	Y	Y	Y	Y	Y
640621	Y	Y	Y	Y	Y	Y	Y	Y
640622	Y	Y	Y	Y	Y	Y	Y	Y
640623	Y	Y	Y	Y	Y	Y	Y	Y
641311	Y	Y	Y	Y	Y	Y	Y	Y
641312	Y	Y	Y	Y	Y	Y	Y	Y
641313	Y	Y	Y	Y	Y	Y	Y	Y
641314	Y	Y	Y	Y	Y	Y	Y	Y
641534	Y	Y	Y	Y	Y	Y	Y	Y
641535	Y	Y	Y	Y	Y	Y	Y	Y
641536	Y	Y	Y	Y	Y	Y	Y	Y
641537	Y	Y	Y	Y	Y	Y	Y	Y
641653	Y	Y	Y	Y	Y	Y	Y	Y
641654	Y	Y	Y	Y	Y	Y	Y	Y
641655	Y	Y	Y	Y	Y	Y	Y	Y
641656	Y	Y	Y	Y	Y	Y	Y	Y
643498	Y	Y	Y	Y	Y	Y	Y	Y
643813	Y*	Y*	Y*	Y*	Y*	Y*	Y*	Y*
643814	Y*	Y*	Y*	Y*	Y*	Y*	Y*	Y*
643815	Y*	Y*	Y*	Y*	Y*	Y*	Y*	Y*
643816	Y*	Y*	Y*	Y*	Y*	Y*	Y*	Y*
643828	Y	Y	Y	Y	Y	Y	Y	Y
644083	Y*	Y*	Y*	Y*	Y*	Y*	Y*	Y*
644312	Y*	Y*	Y*	Y*	Y*	Y*	Y*	Y*
644313	Y*	Y*	Y*	Y*	Y*	Y*	Y*	Y*
644497	Y*	Y*	Y*	Y*	Y*	Y*	Y*	Y*
644511	Y*	Y*	Y*	Y*	Y*	Y*	Y*	Y*
644512	Y*	Y*	Y*	Y*	Y*	Y*	Y*	Y*
644513	Y*	Y*	Y*	Y*	Y*	Y*	Y*	Y*
644514	Y*	Y*	Y*	Y*	Y*	Y*	Y*	Y*
644540	Y*	Y*	Y*	Y*	Y*	Y*	Y*	Y*
644563	Y*	Y*	Y*	Y*	Y*	Y*	Y*	Y*
644564	Y*	Y*	Y*	Y*	Y*	Y*	Y*	Y*
644565	Y*	Y*	Y*	Y*	Y*	Y*	Y*	Y*
644574	Y	Y	Y	Y	Y	Y	Y	Y
644575	Y	Y	Y	Y	Y	Y	Y	Y
644576	Y	Y	Y	Y	Y	Y	Y	Y
644577	Y	Y	Y	Y	Y	Y	Y	Y
644578	Y*	Y*	Y*	Y*	Y*	Y*	Y*	Y*
644579	Y*	Y*	Y*	Y*	Y*	Y*	Y*	Y*
644795	Y*	Y*	Y*	Y*	Y*	Y*	Y*	Y*
1375820	N	N	N	N	N	N	N	N

*2 & 3 position MTA-100 Posted Connectors can not mate with MTA-100 connectors with polarizing tabs.

Catalog 82056
Revised 6-08

www.tycoelectronics.com

Dimensions are in inches and millimeters unless otherwise specified. Values in brackets are metric equivalents.

Dimensions are shown for reference purposes only. Specifications subject to change.

USA: 1-800-522-6752
Canada: 1-905-470-4425
Mexico: 52-55-1106-0800
C. America: 57-1-254-4444

South America: 55-11-2103-6000
Hong Kong: 852-2735-1628
Japan: 81-44-844-8013
UK: 44-208-420-8341

MTA-100 Posted Connector/Connector Mateability Guide (Continued)

This matrix has been prepared to assist you, our customer, in defining the correct mating halves for the MTA-100 posted connector and connector combination. Where a "Y" is indicated the combination is a valid mating pair. Where an "N" is indicated the combination is not acceptable for mating.

Matrix for .000030 [0.00076] Gold Plated Part Numbers

Posted Connectors

Connectors	647008	647009	647010	647011	647012	647013	647014	647015
641237	Y	Y	Y	Y	Y	Y	Y	Y
641238	Y	Y	Y	Y	Y	Y	Y	Y
641239	Y	Y	Y	Y	Y	Y	Y	Y
641240	Y	Y	Y	Y	Y	Y	Y	Y
641241	Y	Y	Y	Y	Y	Y	Y	Y
641242	Y	Y	Y	Y	Y	Y	Y	Y
641243	Y	Y	Y	Y	Y	Y	Y	Y
641244	Y	Y	Y	Y	Y	Y	Y	Y
644020	Y*	Y*	Y*	Y*	Y*	Y*	Y*	Y*
644042	Y*	Y*	Y*	Y*	Y*	Y*	Y*	Y*
644043	Y*	Y*	Y*	Y*	Y*	Y*	Y*	Y*
644044	Y*	Y*	Y*	Y*	Y*	Y*	Y*	Y*
644702	Y*	Y*	Y*	Y*	Y*	Y*	Y*	Y*
644726	Y*	Y*	Y*	Y*	Y*	Y*	Y*	Y*
1375820	N	N	N	N	N	N	N	N

*2 & 3 position MTA-100 Posted Connectors can not mate with MTA-100 connectors with polarizing tabs.

Matrix for .000015 [0.00038] Gold Plated Part Numbers

Posted Connectors

Connectors	647008	647009	647010	647011	647012	647013	647014	647015
641190	Y	Y	Y	Y	Y	Y	Y	Y
641191	Y	Y	Y	Y	Y	Y	Y	Y
641192	Y	Y	Y	Y	Y	Y	Y	Y
641193	Y	Y	Y	Y	Y	Y	Y	Y
641198	Y	Y	Y	Y	Y	Y	Y	Y
641199	Y	Y	Y	Y	Y	Y	Y	Y
641200	Y	Y	Y	Y	Y	Y	Y	Y
641201	Y	Y	Y	Y	Y	Y	Y	Y
644038	Y*	Y*	Y*	Y*	Y*	Y*	Y*	Y*
644040	Y*	Y*	Y*	Y*	Y*	Y*	Y*	Y*
647477	Y*	Y*	Y*	Y*	Y*	Y*	Y*	Y*
647480	Y*	Y*	Y*	Y*	Y*	Y*	Y*	Y*
1375820	N	N	N	N	N	N	N	N
1744020	Y*	Y*	Y*	Y*	Y*	Y*	Y*	Y*

*2 & 3 position MTA-100 Posted Connectors can not mate with MTA-100 connectors with polarizing tabs.

Catalog 82056
Revised 6-08

www.tycoelectronics.com

Dimensions are in inches and millimeters unless otherwise specified. Values in brackets are metric equivalents.

Dimensions are shown for reference purposes only. Specifications subject to change.

USA: 1-800-522-6752
Canada: 1-905-470-4425
Mexico: 52-55-1106-0800
C. America: 57-1-254-4444

South America: 55-11-2103-6000
Hong Kong: 852-2735-1628
Japan: 81-44-844-8013
UK: 44-208-420-8341

MTA-100 IDC Posted Connectors (Wire-to-Wire)—Closed End, Feed-Thru

Material and Finish

Housing — UL 94V-2 rated, nylon, see chart for color

Contacts — Copper alloy, post tin or gold plated over nickel (see chart)

Notes:
1. Mating half visuals - pages 14 & 15.
2. Use feed thru strain relief covers & feed thru dust covers (if needed) - page 16.
3. Approved wire listing - pages 70 thru 74.

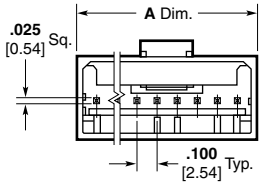

Connector Ordering Information

The "Base Part Numbers" Chart at right shows the base part number.

Prefixes and suffixes are determined by the number of circuit positions in the connector. For example, the complete part number for a 12-position closed end connector for 22 AWG wire would be:

Base number **647000** plus
prefix-and-suffix
4- — -2

The correct ordering number is
4-647000-2

All part numbers are the RoHS equivalent version. Example:

No. of Pos.	Lead Free RoHS Prefix/Suffix
2	3-647000-2
	thru
19	4-647000-9

See page 15 for an explanation of RoHS lead free equivalents.

Note: All RoHS equivalent part numbers may not be available upon catalog release. If the number you need is not available, please contact Product Engineering to expedite your request.

Color Coding by Wire Size for UL 94V-2 Connectors

22 AWG — Red
24 AWG — White
26 AWG — Blue
28 AWG — Green

Performance Data

Voltage Rating — 250 VAC

Current Rating — 4 amp max.

Low-Level Resistance — 16 mΩ max. initial

Dielectric Withstanding Voltage — 750 VAC/1 min.

Insulation Resistance — 5000 MΩ min. initial

Operating Temperature — –55°C to +105°C

Contacts — Copper alloy, post tin or gold plated over nickel

Technical Documents

Product Specification

108-1050-1 MTA-100 Posted Connector

Application Specification

114-1019 MTA-100 Connectors

Replacement IDC Contacts

Material and Finish

Closed End

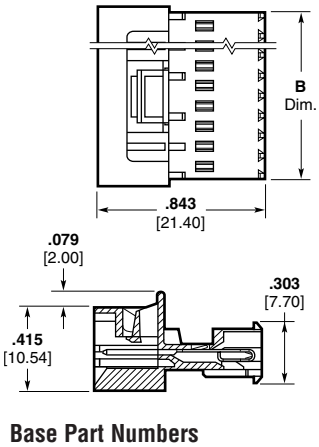

Feed-Thru

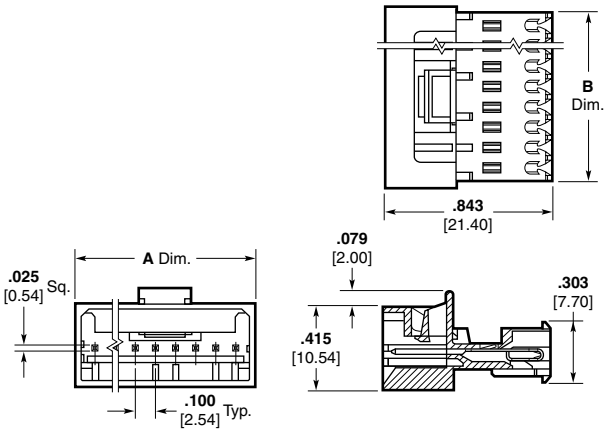

Base Part Numbers

Connector Type & Wire Size	Closed End Connector		Feed-Thru Connector	
	Part Nos.	RoHS Equiv.	Part Nos.	No. of Circuits
Standard UL 94V-2, Tin Plated				
22 AWG 0.3–0.4 mm²	647000	**32–49**[1]	647004	—[2]
24 AWG 0.2 mm²	647001	**32–49**[1]	647005	—[2]
26 AWG 0.12–0.15 mm²	647002	**32–49**[1]	647006	—[2]
28 AWG 0.08–0.09 mm²	647003	**32–49**[1]	647007	—[2]
Standard UL 94V-2, .000030 [0.00076] Gold Plated				
22 AWG 0.3–0.4 mm²	647008	**32–49**[1]	647012	—[2]
24 AWG 0.2 mm²	647009	**32–49**[1]	647013	—[2]
26 AWG 0.12–0.15 mm²	647010	**32–49**[1]	647014	—[2]
28 AWG 0.08–0.09 mm²	647011	**32–49**[1]	647015	—[2]
Standard UL 94V-2, .000015 [0.00038] Gold Plated				
22 AWG 0.3–0.4 mm²	647016	**32–49**[1]	647020	—[2]
24 AWG 0.2 mm²	647017	**32–49**[1]	647021	—[2]
26 AWG 0.12–0.15 mm²	647018	**32–49**[1]	647022	—[2]
28 AWG 0.08–0.09 mm²	647019	**32–49**[1]	647023	—[2]

[1] 2 and 3 position MTA-100 Posted Connectors (Closed End) **can not mate** with MTA-100 connectors with polarizing tabs.
[2] Parts may be manufactured upon request. Minimums may apply. Contact product engineer or product manager for details.

No. of Circuits	Dim. A	Dim. B
2	**.300** [7.62]	**.227** [5.77]
3	**.400** [10.16]	**.327** [8.31]
4	**.500** [12.70]	**.427** [10.85]
5	**.600** [15.24]	**.527** [13.39]

No. of Circuits	Dim. A	Dim. B
6	**.700** [17.78]	**.627** [15.93]
7	**.800** [20.32]	**.727** [18.47]
8	**.900** [22.86]	**.827** [21.01]
9	**1.000** [25.40]	**.927** [23.55]

No. of Circuits	Dim. A	Dim. B
10	**1.100** [27.94]	**1.027** [26.09]
11	**1.200** [30.48]	**1.127** [28.63]
12	**1.300** [33.02]	**1.227** [31.17]
13	**1.400** [35.56]	**1.327** [33.71]

No. of Circuits	Dim. A	Dim. B
14	**1.500** [38.10]	**1.427** [36.25]
15	**1.600** [40.64]	**1.527** [38.79]
16	**1.700** [43.18]	**1.627** [41.33]
17	**1.800** [45.72]	**1.727** [43.87]
18	**1.900** [48.26]	**1.827** [46.41]
19	**2.000** [50.80]	**1.927** [48.95]

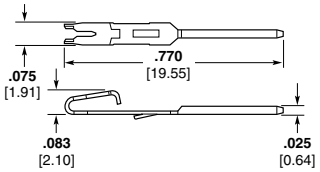

Wire Size AWG	Wire Size mm²	Part Numbers Tin Plated	Part Numbers .000030 [.00076] Gold Plated
22	0.3–0.4	3-647030-1	3-647030-2
24	0.2	3-647031-1	3-647031-2
26	0.12–0.15	3-647032-1	3-647032-2
28	0.8–0.9	3-647033-1	3-647033-2

Catalog 82056
Revised 6-08

www.tycoelectronics.com

Dimensions are in inches and millimeters unless otherwise specified. Values in brackets are metric equivalents.

Dimensions are shown for reference purposes only. Specifications subject to change.

USA: 1-800-522-6752
Canada: 1-905-470-4425
Mexico: 52-55-1106-0800
C. America: 57-1-254-4444

South America: 55-11-2103-6000
Hong Kong: 852-2735-1628
Japan: 81-44-844-8013
UK: 44-208-420-8341

MTA-100 Flat Headers—Straight and Right-Angle

Material and Finish

Housing — UL94V-0 rated, polyester, white

Posts — Copper alloy, tin plated, .000030 [0.00076] or .000015 [0.00038] gold over nickel

Notes:
1. Post(s) can be omitted for keying purposes. Specify the desired post(s) to be omitted using the figure to identify Post No. 1.
2. Gold headers are duplex plated, gold on mating end of post and tin on the solder tail.
3. To determine header overall length (dim. A) multiply .100 x the number of posts. Example: .100 x 10 posts equals 1.000 inch [25.4 mm].

For mateability options, see matrix on pages 12 and 13.

For mating half visuals, see pages 14, 15 and 31.

Header Ordering Information

The "Base Part Numbers" Chart at right shows the base part number.

Prefixes and suffixes are determined by the number of post positions in the header. For example, the complete part number for a 10-position header with straight posts would be:

Base number **641211** plus
prefix-and-suffix
4- — -0

The correct ordering number is
4-641211-0

All part numbers are the RoHS equivalent version. Example:

No. of Pos.	Lead Free RoHS Prefix/Suffix
2	3-641211–2
	thru
28	5-641211-8

See page 15 for an explanation of RoHS lead free equivalents.

Note: All RoHS equivalent part numbers may not be available upon catalog release. If the number you need is not available, please contact Product Engineering to expedite your request.

Note:
Select load headers (omitted pin headers) are available upon request. Please contact product engineer or product manager for details.

Straight Post (.025 [0.64] Square)

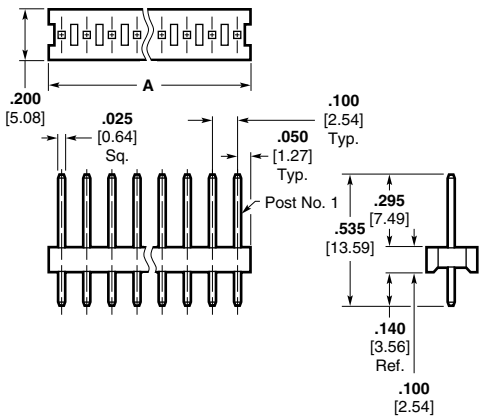

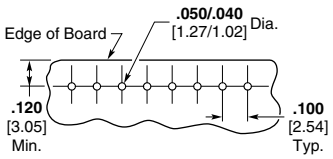

Recommended Mounting Hole Pattern for .062 [1.57] Thk. PC Board

Right-Angle Post (.025 [0.64] Square)

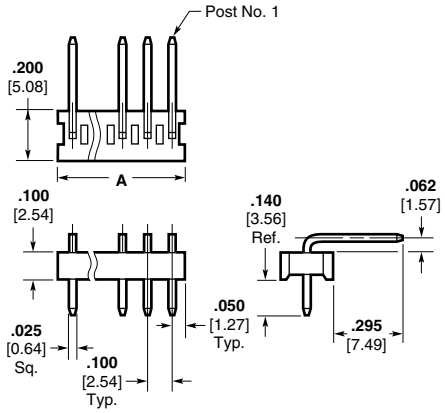

X = .120 [3.05] min., .240 [6.1] max. when mated with MTA-100 Connector.
X = .120 [3.05] min., when mated with CST-100 II Connector.

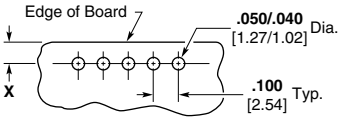

Recommended Mounting Hole Pattern for .062 [1.57] Thk. PC Board

Note: Consult Product Drawing for details on placing headers onto PC boards.

Base Part Numbers

Straight Posts		Right-Angle Posts	
Header Part Nos.	No. of Posts/ RoHS Equiv.	Header Part Nos.	No. of Posts/ RoHS Equiv.
Standard UL94V-0, Tin Plated			
640452	**2–28**	640453	**2–28**
Standard UL94V-0, .000030 [0.00076] Gold Plated			
641211	2–28 **32–58**	641212	2–28 **32–58**
Standard UL94V-0, .000015 [0.00038] Gold Plated			
641122	2–28 **32–58**	641123	2–28 **32–58**

Catalog 82056
Revised 6-08

www.tycoelectronics.com

Dimensions are in inches and millimeters unless otherwise specified. Values in brackets are metric equivalents.

Dimensions are shown for reference purposes only. Specifications subject to change.

USA: 1-800-522-6752
Canada: 1-905-470-4425
Mexico: 52-55-1106-0800
C. America: 57-1-254-4444

South America: 55-11-2103-6000
Hong Kong: 852-2735-1628
Japan: 81-44-844-8013
UK: 44-208-420-8341

MTA-100 Narrow Flat Headers—Straight and Right-Angle

Material and Finish

Housing — UL94V-0 rated, polyester, white

Posts — Copper alloy, tin plated, .000030 [0.00076] or .000015 [0.00038] gold over nickel

Notes:
1. Post(s) can be omitted for keying purposes. Specify the desired post(s) to be omitted using the figure to identify Post No. 1.
2. Headers without retentive legs are suitable for breakaway application.
3. 2 or 3 retentive leg(s) per header, depending upon number of positions.
4. Gold headers are duplex plated, gold on mating end of post and tin on the solder tail.
5. To determine header overall length (dim. A) multiply .100 x the number of posts minus (–) .012. Example: .100 x 10 posts – .012 = .988 inches [25.1 mm].

For mateability options, see matrix on pages 12 and 13.

For mating half visuals, see pages 14, 15 and 31.

Connector Ordering Information

The "Base Part Numbers" Chart at right shows the base part number.

Prefixes and suffixes are determined by the number of post positions in the header. For example, the complete part number for a 10-position header with straight posts and without retentive legs would be:

Base number **644456** plus
prefix-and-suffix
4- — -0

The correct ordering number is
4-644456-0

All part numbers are the RoHS equivalent version. Example:

No. of Pos.	Lead Free RoHS Prefix/Suffix
2	3-644456-2
	thru
28	5-644456-8

See page 15 for an explanation of RoHS lead free equivalents.

Note: All RoHS equivalent part numbers may not be available upon catalog release. If the number you need is not available, please contact Product Engineering to expedite your request.

Note:
Select load headers (omitted pin headers) are available upon request. Please contact product engineer or product manager for details.

Straight Post (.025 [0.64] Square)

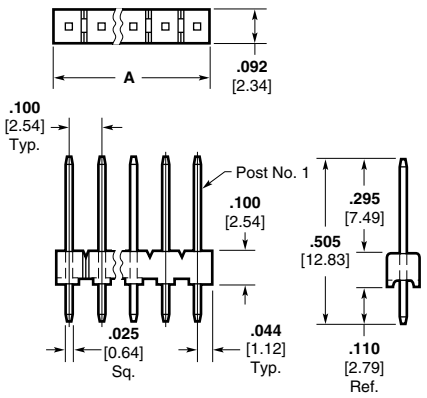

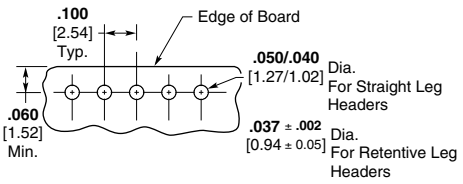

Recommended Mounting Hole Pattern for .062 [1.57] Thk. PC Board

Right-Angle Post (.025 [0.64] Square)

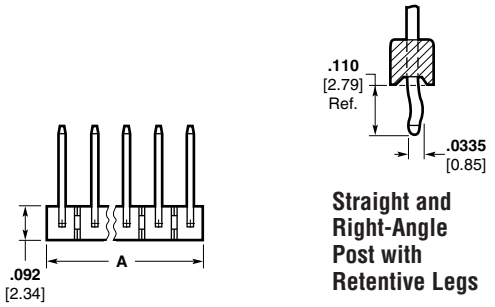

Straight and Right-Angle Post with Retentive Legs

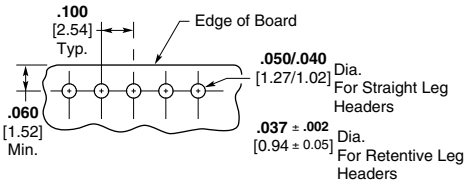

Recommended Mounting Hole Pattern for .062 [1.57] Thk. PC Board

Note: Consult Product Drawing for details on placing headers onto PC boards.

Base Part Numbers

Straight Posts				Right-Angle Posts			
Without Retentive Legs		With Retentive Legs		Without Retentive Legs		With Retentive Legs	
Header Part Nos.	RoHS Equiv.	Header Part Nos.	RoHS Equiv.	Header Part Nos.	RoHS Equiv.	Header Part Nos.	RoHS Equiv.
Standard UL94V-0, Tin Plated							
644456	**32–58**	644695	**32–58**	644457	**32–58**	644694	**32–58**
Standard UL94V-0, .000030 [0.00076] Gold Plated							
644884	**2–28**	644886	**2–28**	644885	**2–28**	644887	**2–28**
Standard UL94V-0, .000015 [0.00038] Gold Plated							
644888	**2–28**	644890	**2–28**	644889	**2–28**	644891	**2–28**

High temperature product available. Please contact Sales Engineer or Product Information Center.

Catalog 82056
Revised 6-08

www.tycoelectronics.com

Dimensions are in inches and millimeters unless otherwise specified. Values in brackets are metric equivalents.

Dimensions are shown for reference purposes only. Specifications subject to change.

USA: 1-800-522-6752
Canada: 1-905-470-4425
Mexico: 52-55-1106-0800
C. America: 57-1-254-4444

South America: 55-11-2103-6000
Hong Kong: 852-2735-1628
Japan: 81-44-844-8013
UK: 44-208-420-8341

MTA-100 Polarized Headers—Straight and Right-Angle

Material and Finish

Housing — UL94V-0 rated, polyester, white

Posts — Copper alloy, tin plated, .000030 [0.00076] or .000015 [0.00038] gold over nickel

Notes:
1. Post(s) can be omitted for keying purposes. Specify the desired post(s) to be omitted using the figure to identify Post No. 1.
2. Gold headers are duplex plated, gold on mating end of post and tin on the solder tail.
3. All posts on retentive leg headers are bent.
4. To determine header overall length (dim. A) multiply .100 x the number of posts. Example: .100 x 10 posts equals 1.000 inch [25.4 mm].

For mateability options, see matrix on pages 12 and 13.

For mating half visuals, see pages 14, 15 and 31.

Header Ordering Information

The "Base Part Numbers" Chart at right shows the base part number.

Prefixes and suffixes are determined by the number of post positions in the header. For example, the complete part number for a 10-position header with straight posts would be:

Base number **641213** plus
prefix-and-suffix
4- — -0

The correct ordering number is
4-641213-0

All part numbers are the RoHS equivalent version. Example:

No. of Pos.	Lead Free RoHS Prefix/Suffix
2	3-641213-2
	thru
28	5-641213-8

See page 15 for an explanation of RoHS lead free equivalents.

Note: All RoHS equivalent part numbers may not be available upon catalog release. If the number you need is not available, please contact Product Engineering to expedite your request.

Note:
Select load headers (omitted pin headers) are available upon request. Please contact product engineer or product manager for details.

Straight Post (.025 [0.64] Square)

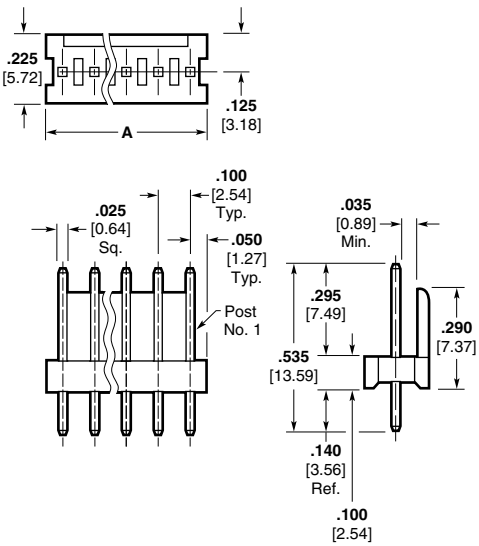

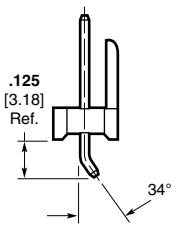

Retentive Leg

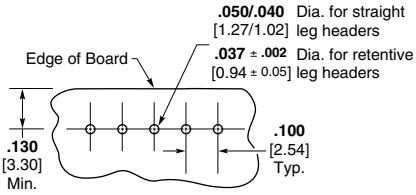

Recommended Mounting Hole Pattern for .062 [1.57] Thk. PC Board

Right-Angle Post (.025 [0.64] Square)

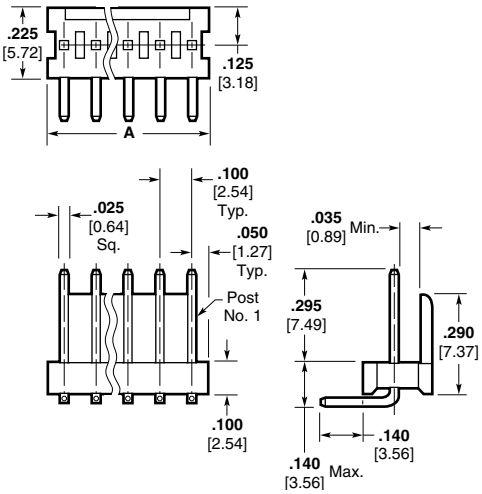

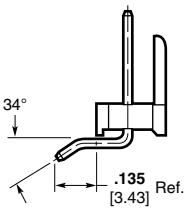

Retentive Leg

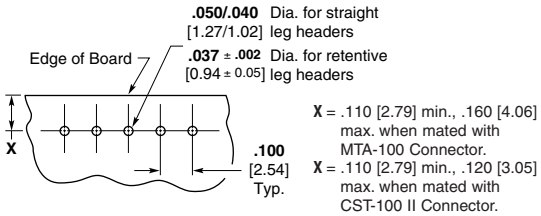

Recommended Mounting Hole Pattern for .062 [1.57] Thk. PC Board

Note: Consult Product Drawing for details on placing headers onto PC boards.

Base Part Numbers

Straight Posts				Right-Angle Posts			
Without Retentive Legs		With Retentive Legs		Without Retentive Legs		With Retentive Legs	
Header Part Nos.	RoHS Equiv.	Header Part Nos.	RoHS Equiv.	Header Part Nos.	RoHS Equiv.	Header Part Nos.	RoHS Equiv.
Standard UL94V-0, Tin Plated							
640454	**2–28**	644876	**2–28**	640455	**2–28**	644877	**2–28**
Standard UL94V-0, .000030 [0.00076] Gold Plated							
641213	**32–58**	—	—	641214	**32–58**	—	—
Standard UL94V-0, .000015 [0.00038] Gold Plated							
641124	**32–58**	—	—	641125	**32–58**	—	—

Catalog 82056
Revised 6-08

www.tycoelectronics.com

Dimensions are in inches and millimeters unless otherwise specified. Values in brackets are metric equivalents.

Dimensions are shown for reference purposes only. Specifications subject to change.

USA: 1-800-522-6752
Canada: 1-905-470-4425
Mexico: 52-55-1106-0800
C. America: 57-1-254-4444

South America: 55-11-2103-6000
Hong Kong: 852-2735-1628
Japan: 81-44-844-8013
UK: 44-208-420-8341

MTA-100 Friction Lock Headers—Straight and Right-Angle

Material and Finish

Housing — UL94V-0 rated, polyester, white

Posts — Copper alloy, tin plated, .000030 [0.00076] or .000015 [0.00038] gold over nickel

Notes:
1. Post(s) can be omitted for keying purposes. Specify the desired post(s) to be omitted using the figure to identify Post No. 1.
2. Gold headers are duplex plated, gold on mating end of post and tin on the solder tail.
3. All posts on retentive leg headers are bent.
4. To determine header overall length (dim. A) multiply .100 x the number of posts. Example: .100 x 10 posts equals 1.000 inch [25.4 mm].

For mateability options, see matrix on pages 12 and 13.

For mating half visuals, see pages 14, 15 and 31.

Header Ordering Information

The "Base Part Numbers" Chart at right shows the base part number.

Prefixes and suffixes are determined by the number of post positions in the header. For example, the complete part number for a 10-position header with straight posts would be:

Base number **641215** plus
prefix-and-suffix
4- — -0

The correct ordering number is
4-641215-0

All part numbers are the RoHS equivalent version. Example:

No. of Pos.	Standard Prefix/Suffix	Lead Free RoHS Prefix/Suffix
2	641215-2	3-641215-2
	thru	
28	2-641215-8	5-641215-8

See page 15 for an explanation of RoHS lead free equivalents.

Note: All RoHS equivalent part numbers may not be available upon catalog release. If the number you need is not available, please contact Product Engineering to expedite your request.

Note:
Select load headers (omitted pin headers) are available upon request. Please contact product engineer or product manager for details.

Straight Post (.025 [0.64] Square)

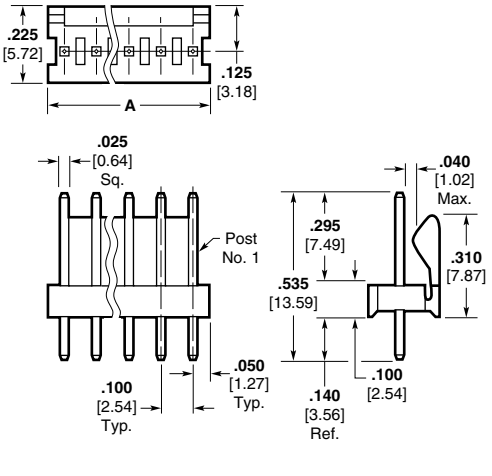

Right-Angle Post (.025 [0.64] Square)

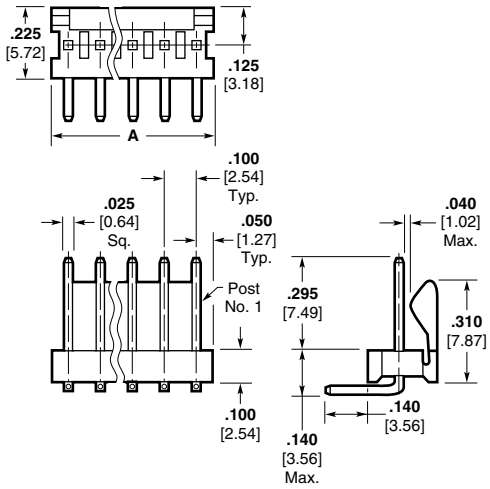

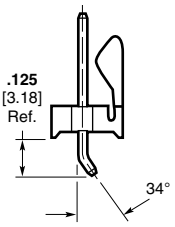

Retentive Leg

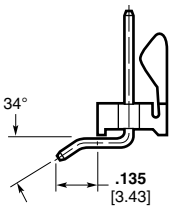

Retentive Leg

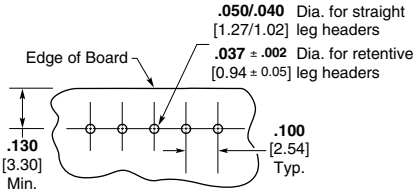

Recommended Mounting Hole Pattern for .062 [1.57] Thk. PC Board

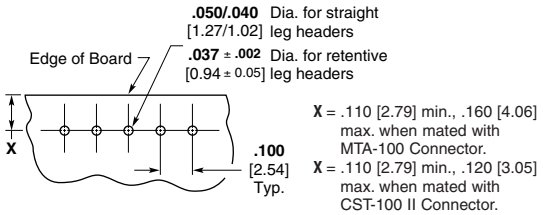

Recommended Mounting Hole Pattern for .062 [1.57] Thk. PC Board

Note: Consult Product Drawing for details on placing headers onto PC boards.

Base Part Numbers

Straight Posts				Right-Angle Posts			
Without Retentive Legs		With Retentive Legs		Without Retentive Legs		With Retentive Legs	
Header Part Nos.	RoHS Equiv.	Header Part Nos.	RoHS Equiv.	Header Part Nos.	RoHS Equiv.	Header Part Nos.	RoHS Equiv.
Standard UL94V-0, Tin Plated							
640456	**2–28**	644874	**2–28**	640457	**2–28**	644875	**2–28**
Standard UL94V-0, .000030 [0.00076] Gold Plated							
641215	**32–58**	—	—	641216	**32–58**	—	—
Standard UL94V-0, .000015 [0.00038] Gold Plated							
641126	**32–58**	—	—	641127	**32–58**	—	—

Catalog 82056
Revised 6-08

www.tycoelectronics.com

Dimensions are in inches and millimeters unless otherwise specified. Values in brackets are metric equivalents.

Dimensions are shown for reference purposes only. Specifications subject to change.

USA: 1-800-522-6752
Canada: 1-905-470-4425
Mexico: 52-55-1106-0800
C. America: 57-1-254-4444

South America: 55-11-2103-6000
Hong Kong: 852-2735-1628
Japan: 81-44-844-8013
UK: 44-208-420-8341

MTA-100 Headers with Retention Peg—Straight

Material and Finish

Housing — UL94V-0 rated, thermoplastic, black

Posts — Copper alloy, tin plated, .000030 [0.00076] or .000015 [0.00038] gold over nickel

Notes:
1. Post(s) can be omitted for keying purposes. Specify the desired post(s) to be omitted using the figure to identify Post No. 1.
2. Gold headers are duplex plated, gold on mating end of post and tin on the solder tail.
3. To determine header overall length (dim. A) multiply .100 x the number of posts. Example: .100 x 10 posts equals 1.000 inch [25.4 mm].

For mateability options, see matrix on pages 12 and 13.

For mating half visuals, see pages 14, 15 and 31.

Header Ordering Information

The "Base Part Numbers" Chart at right shows the base part number.

Prefixes and suffixes are determined by the number of post positions in the header. For example, the complete part number for a 10-position header with straight posts would be:

Base number **647609** plus prefix-and-suffix
4- — -0

The correct ordering number is
4-647609-0

All part numbers are the RoHS equivalent version. Example:

No. of Pos.	Standard Prefix/Suffix	Lead Free RoHS Prefix/Suffix
2	647609-2	3-647609-2
3	647609-3	3-647609-3
4	647609-4	3-647609-4
5	647609-5	3-647609-5
6	647609-6	3-647609-6
7	647609-7	3-647609-7
8	647609-8	3-647609-8
9	647609-9	3-647609-9
10	1-647609-0	4-647609-0
11	1-647609-1	4-647609-1
12	1-647609-2	4-647609-2

Note: All RoHS equivalent part numbers may not be available upon catalog release. If the number you need is not available, please contact Product Engineering to expedite your request.

Friction Lock

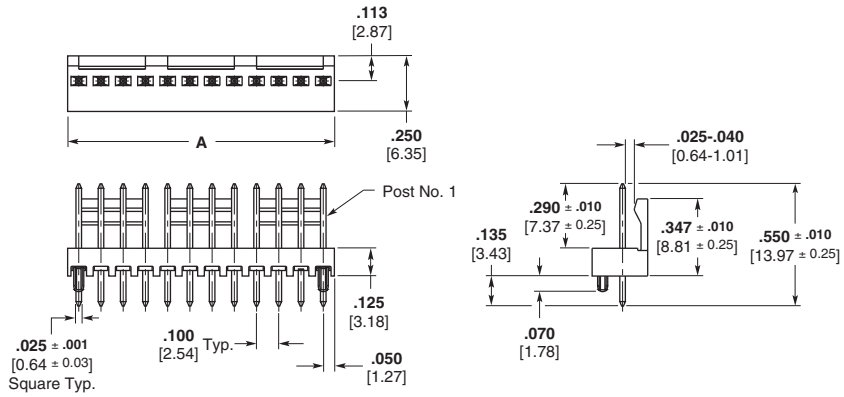

Polarized

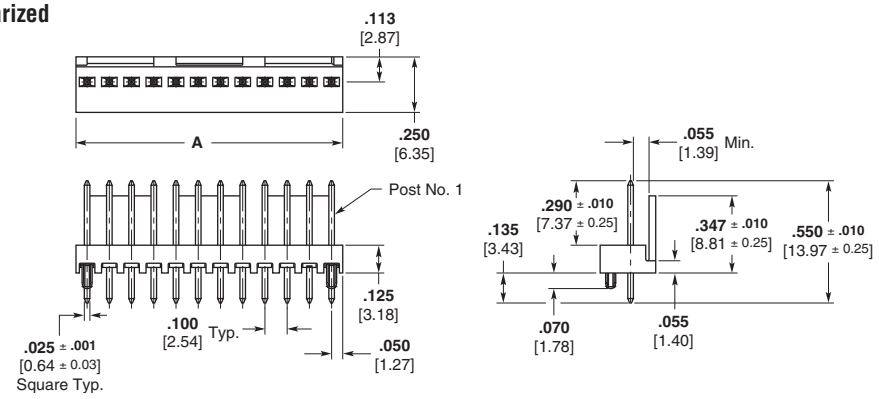

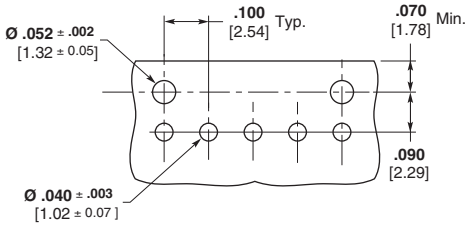

Recommended Mounting Hole Pattern for .062 [1.57] Thk. PC Board

Note: Consult Product Drawing for details on placing headers onto PC boards.

Base Part Numbers

Friction Lock		Polarized	
Header Part Nos.	RoHS Equiv.	Header Part Nos.	RoHS Equiv.
Standard UL94V-0, Tin Plated			
647609	**32-42**	647623	**32-42**
Standard UL94V-0, .000030 [0.00076] Gold Plated			
647626	**32-42**	647624	**32-42**
Standard UL94V-0, .000015 [0.00038] Gold Plated			
647627	**32-42**	647625	**32-42**

Note:
Select load headers (omitted pin headers) are available upon request. Please contact product engineer or product manager for details.

Catalog 82056
Revised 6-08

www.tycoelectronics.com

Dimensions are in inches and millimeters unless otherwise specified. Values in brackets are metric equivalents.

Dimensions are shown for reference purposes only. Specifications subject to change.

USA: 1-800-522-6752
Canada: 1-905-470-4425
Mexico: 52-55-1106-0800
C. America: 57-1-254-4444

South America: 55-11-2103-6000
Hong Kong: 852-2735-1628
Japan: 81-44-844-8013
UK: 44-208-420-8341

MTA-100 High Profile Headers—Right-Angle

Material and Finish

Housing — UL94V-0 rated, thermoplastic, black

Posts — Copper alloy, tin plated, .000030 [0.00076] or .000015 [0.00038] gold over nickel

Notes:
1. Post(s) can be omitted for keying purposes. Specify the desired post(s) to be omitted using the figure to identify Post No. 1.
2. Gold headers are duplex plated, gold on mating end of post and tin on the solder tail.
3. To determine header overall length (dim. A) multiply .100 x the number of posts. Example: .100 x 10 posts equals 1.000 inch [25.4 mm].
4. This product can be mounted in the middle of the PC Board as shown in the PCB layout.

For mateability options, see matrix on pages 12 and 13.

For mating half visuals, see pages 14, 15 and 31.

Header Ordering Information

The "Base Part Numbers" Chart at right shows the base part number.

Prefixes and suffixes are determined by the number of post positions in the header. For example, the complete part number for a 10-position header with right-angle posts would be:

Base number **647630** plus
prefix-and-suffix
4- — -0

The correct ordering number is
4-647630-0

All part numbers are the RoHS equivalent version. Example:

No. of Pos.	Lead Free RoHS Prefix/Suffix
2	3-647630-2
3	3-647630-3
4	3-647630-4
5	3-647630-5
6	3-647630-6
7	3-647630-7
8	3-647630-8
9	3-647630-9
10	4-647630-0
11	4-647630-1
12	4-647630-2

Note: All RoHS equivalent part numbers may not be available upon catalog release. If the number you need is not available, please contact Product Engineering to expedite your request.

Friction Lock

Right-Angle Post (.025 [0.64] Square)

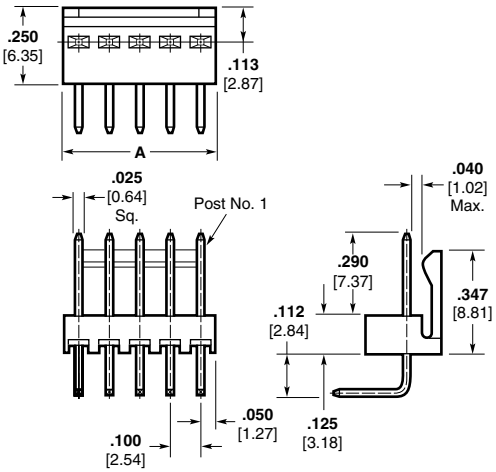

Polarized

Right-Angle Post (.025 [0.64] Square)

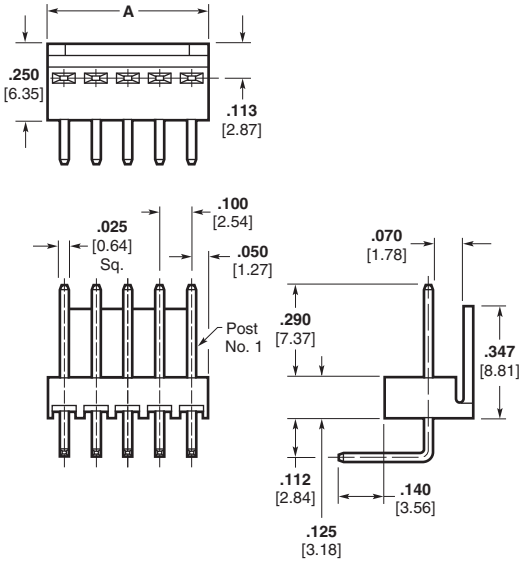

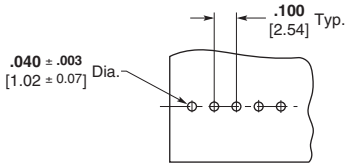

Recommended Mounting Hole Pattern for .062 [1.57] Thk. PC Board

Note: Consult Product Drawing for details on placing headers onto PC boards.

Base Part Numbers

Friction Lock Right-Angle Posts		Polarized Right-Angle Posts	
Header Part Nos.	RoHS Equiv.	Header Part Nos.	RoHS Equiv.
Standard UL94V-0, Tin Plated			
647630	**32-42**	647651	**32-42**
Standard UL94V-0, .000030 [0.00076] Gold Plated			
647629	**32-42**	647653	**32-42**
Standard UL94V-0, .000015 [0.00038] Gold Plated			
647628	**32-42**	647652	**32-42**

Note:
Select load headers (omitted pin headers) are available upon request. Please contact product engineer or product manager for details.

Catalog 82056
Revised 6-08

www.tycoelectronics.com

Dimensions are in inches and millimeters unless otherwise specified. Values in brackets are metric equivalents.

Dimensions are shown for reference purposes only. Specifications subject to change.

USA: 1-800-522-6752
Canada: 1-905-470-4425
Mexico: 52-55-1106-0800
C. America: 57-1-254-4444

South America: 55-11-2103-6000
Hong Kong: 852-2735-1628
Japan: 81-44-844-8013
UK: 44-208-420-8341

MTA-100 Polarized High Temperature Headers—Straight and Right-Angle

For use with Infrared Reflow Process

Maximum Temperature Rating: 2–12 Position: 280°C
13–18 Position: 235°C

Material and Finish

Housing —
2–12 Position — UL94V-0 rated, nylon, black
13–18 Position — UL94V-0 rated, LCP, black

Posts — Copper alloy, tin plated, .000030 [0.00076] or .000015 [0.00038] gold over nickel

Notes:
1. Post(s) can be omitted for keying purposes. Specify the desired post(s) to be omitted using the figure to identify Post No. 1.
2. Gold headers are duplex plated, gold on mating end of post and tin on the solder tail.
3. To determine header overall length (dim. A) multiply .100 x the number of posts. Example: .100 x 10 posts equals 1.000 inch [25.4 mm].

For mateability options, see matrix on pages 12 and 13.

For mating half visuals, see pages 14, 15 and 31.

Header Ordering Information

The "Base Part Numbers" Chart at right shows the base part number.

Prefixes and suffixes are determined by the number of post positions in the header. For example, the complete part number for a 10-position header with straight posts would be:

Base number **647047** plus
prefix-and-suffix
4- — -0

The correct ordering number is
4-647047-0

All part numbers are the RoHS equivalent version. Example:

No. of Pos.	Lead Free RoHS Prefix/Suffix
2	3-647047-2
	thru
12	4-647047-2
13	NA
	thru
18	NA

See page 15 for an explanation of RoHS lead free equivalents.

Note: All RoHS equivalent part numbers may not be available upon catalog release. If the number you need is not available, please contact Product Engineering to expedite your request.

Straight Post (.025 [0.64] Square)

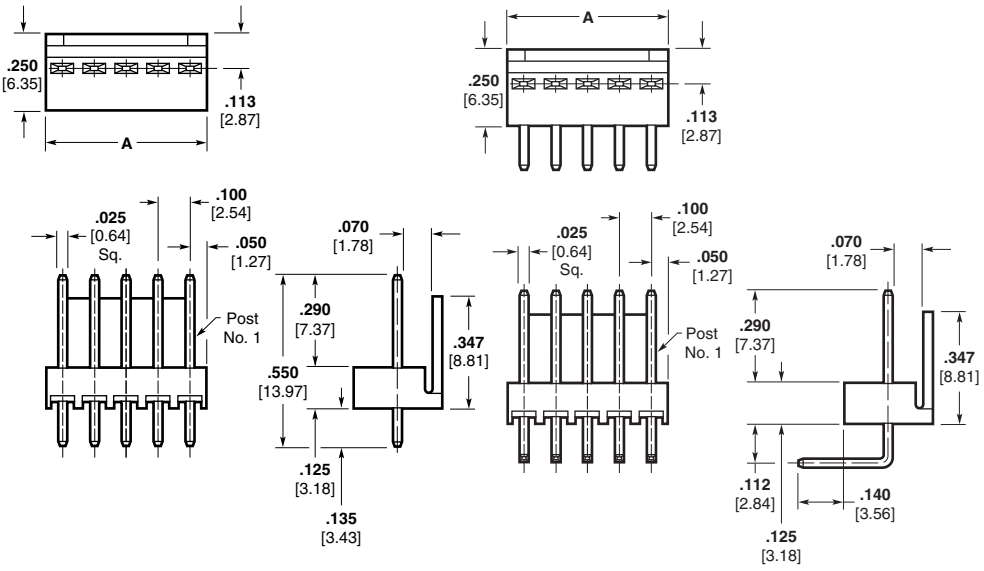

Right-Angle Post (.025 [0.64] Square)

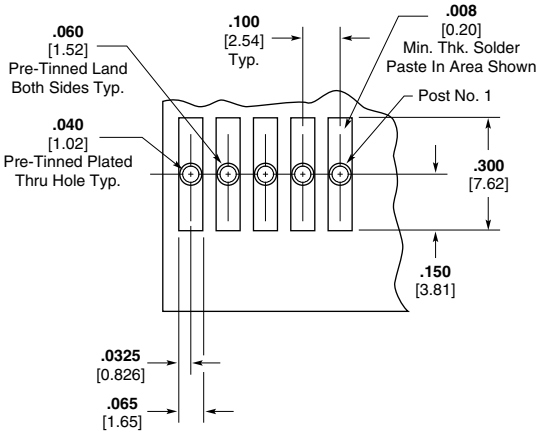

Recommended Mounting Hole Pattern for .062 [1.57] Thick PC Board

Note: Consult Product Drawing for details on placing headers onto PC boards.

Base Part Numbers

Straight Posts		Straight Posts (Tube Loaded)		Right-Angle Posts	
Header Part Nos.	RoHS Equiv.	Header Part Nos.	RoHS Equiv.	Header Part Nos.	RoHS Equiv.
Standard UL94V-0, Tin Plated					
647047	**32–42**	647298	**32–42**	647048	**32–42**
Standard UL94V-0, .000030 [0.00076] Gold Plated					
647109	**32–42**	647300	**32–42**	647114	**32–42**
Standard UL94V-0, .000015 [0.00038] Gold Plated					
647075	**32–42**	647299	**32–42**	647076	**32–42**

Note: Select load headers (omitted pin headers) are available upon request. Please contact product engineer or product manager for details.

Catalog 82056
Revised 6-08

www.tycoelectronics.com

Dimensions are in inches and millimeters unless otherwise specified. Values in brackets are metric equivalents.

Dimensions are shown for reference purposes only. Specifications subject to change.

USA: 1-800-522-6752
Canada: 1-905-470-4425
Mexico: 52-55-1106-0800
C. America: 57-1-254-4444

South America: 55-11-2103-6000
Hong Kong: 852-2735-1628
Japan: 81-44-844-8013
UK: 44-208-420-8341

MTA-100 Friction Lock High Temperature Headers—Straight and Right-Angle

For use with Infrared Reflow Process

Maximum Temperature Rating: 2–12 Position: 280°C
13–18 Position: 235°C

Material and Finish

Housing —
2–12 Position — UL94V-0 rated, nylon, black
13–18 Position — UL94V-0 rated, LCP, black

Posts — Copper alloy, tin plated, .000030 [0.00076] or .000015 [0.00038] gold over nickel

Notes:
1. Post(s) can be omitted for keying purposes. Specify the desired post(s) to be omitted using the figure to identify Post No. 1.
2. Gold headers are duplex plated, gold on mating end of post and tin on the solder tail.
3. To determine header overall length (dim. A) multiply .100 x the number of posts. Example: .100 x 10 posts equals 1.000 inch [25.4 mm].

For mateability options, see matrix on pages 12 and 13.

For mating half visuals, see pages 14, 15 and 31.

Header Ordering Information

The "Base Part Numbers" Chart at right shows the base part number.

Prefixes and suffixes are determined by the number of post positions in the header. For example, the complete part number for a 10-position header with straight posts would be:

Base number **647050** plus
prefix-and-suffix
4- — -0

The correct ordering number is
4-647050-0

All part numbers are the RoHS equivalent version. Example:

No. of Pos.	Standard Prefix/Suffix	Lead Free RoHS Prefix/Suffix
2	647050-2	3-647050-2
	thru	
12	1-647050-2	4-647050-2
13	1-647050-3	NA
	thru	
18	1-647050-8	NA

See page 15 for an explanation of RoHS lead free equivalents.

Note: All RoHS equivalent part numbers may not be available upon catalog release. If the number you need is not available, please contact Product Engineering to expedite your request.

Straight Post (.025 [0.64] Square)

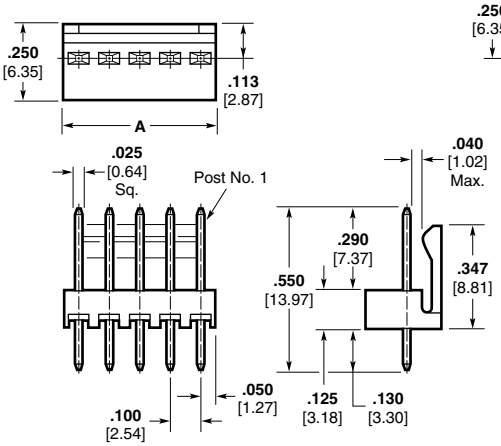

Right-Angle Post (.025 [0.64] Square)

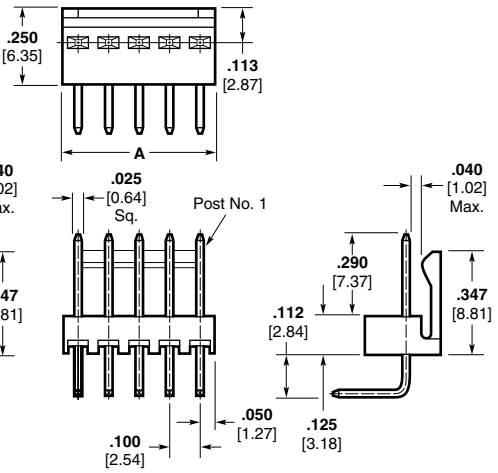

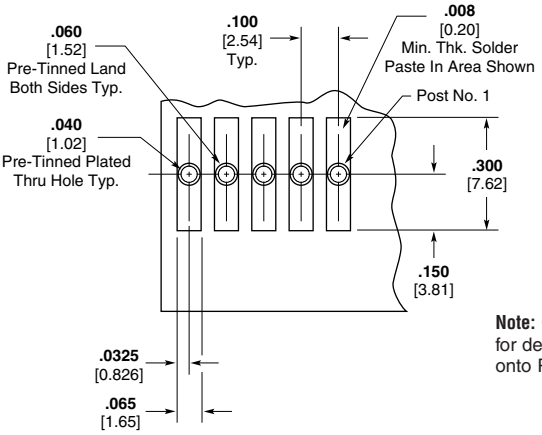

Note: Consult Product Drawing for details on placing headers onto PC boards.

Recommended Mounting Hole Pattern for .062 [1.57] Thick PC Board

Base Part Numbers

Straight Posts		Straight Posts (Tube Loaded)		Right-Angle Posts	
Header Part Nos.	RoHS Equiv.	Header Part Nos.	RoHS Equiv.	Header Part Nos.	RoHS Equiv.
Standard UL94V-0, Tin Plated					
647050	**32-42**	647295	**32-42**	647051	**32-42**
Standard UL94V-0, .000030 [0.00076] Gold Plated					
647116	**32-42**	647297	**32-42**	647117	**32-42**
Standard UL94V-0, .000015 [0.00038] Gold Plated					
647078	**32-42**	647296	**32-42**	647079	**32-42**

Note: Select load headers (omitted pin headers) are available upon request. Please contact product engineer or product manager for details.

Catalog 82056
Revised 6-08

www.tycoelectronics.com

Dimensions are in inches and millimeters unless otherwise specified. Values in brackets are metric equivalents.

Dimensions are shown for reference purposes only. Specifications subject to change.

USA: 1-800-522-6752
Canada: 1-905-470-4425
Mexico: 52-55-1106-0800
C. America: 57-1-254-4444

South America: 55-11-2103-6000
Hong Kong: 852-2735-1628
Japan: 81-44-844-8013
UK: 44-208-420-8341

MTA-100 Polarized and Friction Lock Surface Mount Headers—Straight

For use with Infrared Reflow Process

Maximum Temperature Rating: 2–12 Position: 280°C
13–18 Position: 235°C

Material and Finish

Housing —
2–12 Position — UL94V-0 rated, nylon, black
13–18 Position — UL94V-0 rated, LCP, black

Posts — Copper alloy, tin plated, .000030 [0.00076] or .000015 [0.00038] gold over nickel

Notes:
1. Post(s) can be omitted for keying purposes. Specify the desired post(s) to be omitted using the figure to identify Post No. 1.
2. Gold headers are duplex plated, gold on mating end of post and tin on the solder tail.
3. To determine header overall length (dim. A) multiply .100 x the number of posts. Example: .100 x 10 posts equals 1.000 inch [25.4 mm].

For mateability options, see matrix on pages 12 and 13.

For mating half visuals, see pages 14, 15 and 31.

Header Ordering Information

The "Base Part Numbers" Chart at right shows the base part number.

Prefixes and suffixes are determined by the number of post positions in the header. For example, the complete part number for a 10-position surface mount polarized header would be:

Base number **647106** plus
prefix-and-suffix
4- — -0

The correct ordering number is
4-647106-0

All part numbers are the RoHS equivalent version. Example:

No. of Pos.	Lead Free RoHS Prefix/Suffix
2	3-647106-2
12	4-647106-2

See page 15 for an explanation of RoHS lead free equivalents.

Note: All RoHS equivalent part numbers may not be available upon catalog release. If the number you need is not available, please contact Product Engineering to expedite your request.

Polarized Header **Friction Lock Header**

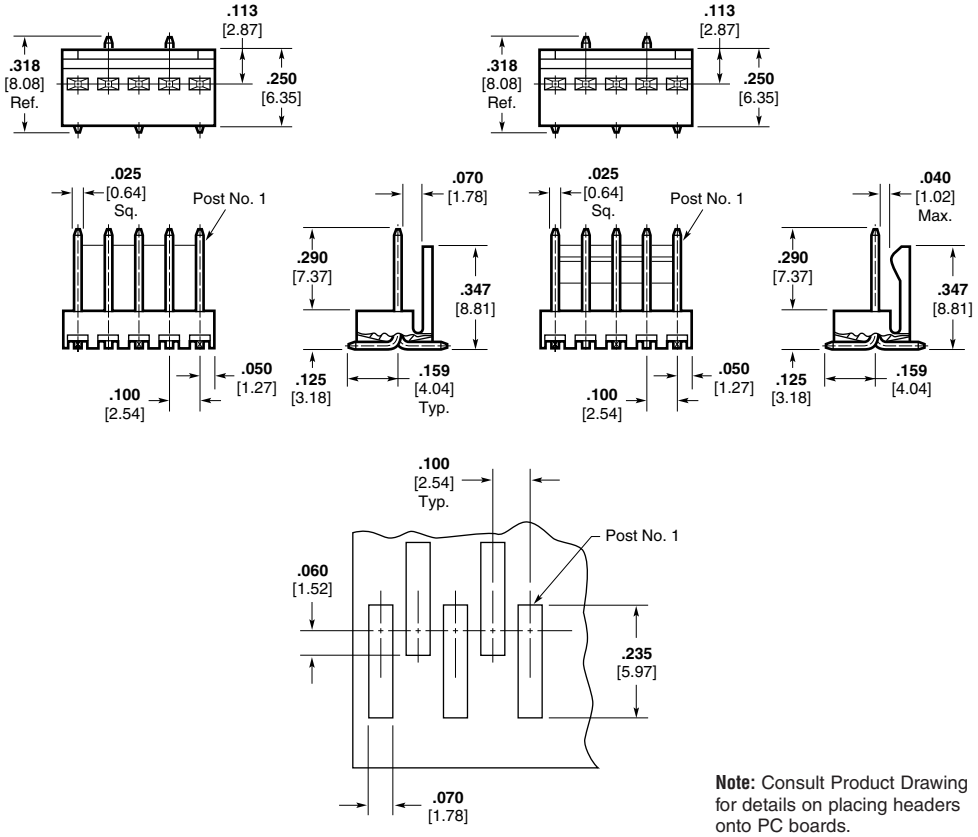

Note: Consult Product Drawing for details on placing headers onto PC boards.

Recommended PC Board Layout for use with .010 [0.25] Thick Stencil

Base Part Numbers

Polarized Headers		Friction Lock Headers	
Header Part Nos.	RoHS Equiv.	Header Part Nos.	RoHS Equiv.
Standard UL94V-0, Tin Plated			
647106	**32-42**	647166	**32-42**
Standard UL94V-0, .000030 [0.00076] Gold Plated			
647108	**32-42**	647168	**32-42**
Standard UL94V-0, .000015 [0.00038] Gold Plated			
647107	**32-42**	647167	**32-42**

Tape Mount Part Numbers

Polarized Headers		Friction Lock Headers	
Header Part Nos.	RoHS Equiv.	Header Part Nos.	RoHS Equiv.
Standard UL94V-0, Tin Plated			
647531	**32-42**	647502	**32-42**
Standard UL94V-0, .000030 [0.00076] Gold Plated			
		1744163	**32-42**
Standard UL94V-0, .000015 [0.00038] Gold Plated			
		647467	**32-42**

Note: Select load headers (omitted pin headers) are available upon request. Please contact product engineer or product manager for details.

Catalog 82056
Revised 6-08

www.tycoelectronics.com

Dimensions are in inches and millimeters unless otherwise specified. Values in brackets are metric equivalents.

Dimensions are shown for reference purposes only. Specifications subject to change.

USA: 1-800-522-6752
Canada: 1-905-470-4425
Mexico: 52-55-1106-0800
C. America: 57-1-254-4444

South America: 55-11-2103-6000
Hong Kong: 852-2735-1628
Japan: 81-44-844-8013
UK: 44-208-420-8341

MTA-100 Shrouded Headers—Straight and Right-Angle

Material and Finish

Housing — UL94V-0 rated, polyester, black

Posts — Copper alloy, tin plated; or .000030 [0.00076] gold over nickel

Notes:
1. Post(s) can be omitted for keying purposes. Specify the desired post(s) to be omitted using the figure to identify Post No. 1.
2. Headers with .000015 [0.00038] gold plated post are available upon request. Minimums may apply.
3. Gold headers are duplex plated, gold on mating end of post and tin on the solder tail.

For mateability options, see matrix on pages 12 and 13.

For mating half visuals, see pages 14 and 15.

Header Ordering Information

The "Base Part Numbers" Chart at right shows the base part number.

Prefixes and suffixes are determined by the number of post positions in the header. For example, the complete part number for a 10-position header with straight posts and with pegs would be:

Base number **644486** plus prefix-and-suffix
4- — -0

The correct ordering number is
4-644486-0

See page 15 for an explanation of RoHS lead free equivalents.

Note: All RoHS equivalent part numbers may not be available upon catalog release. If the number you need is not available, please contact Product Engineering to expedite your request.

Notes:
1. Select load headers (omitted pin headers) are available upon request. Please contact product engineer or product manager for details.
2. MTA-100 shrouded headers **do not mate** with CST-100 II housings.

Straight Post (.025 [0.64] Square)

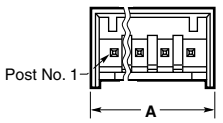

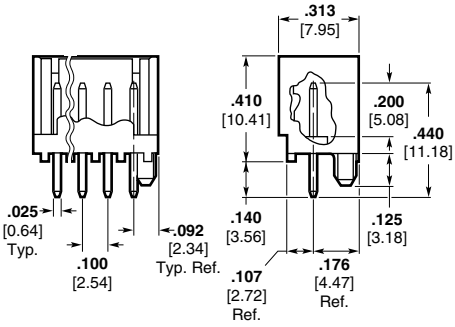

Right-Angle (.025 [0.64] Square)

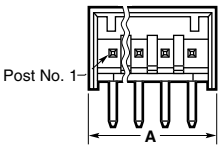

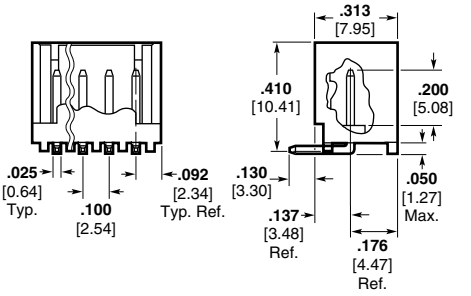

Front Bend

Polarized Retention Peg

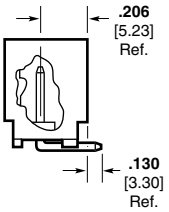

Rear Bend

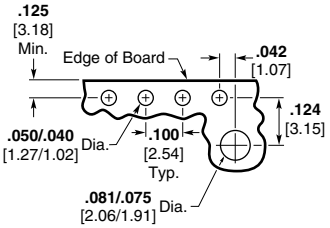

Recommended Mounting Hole Pattern for .062 [1.57] Thk. PC Board
(Solder Side of Board Shown)

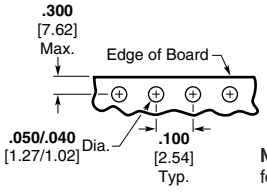

Recommended Mounting Hole Pattern for .062 [1.57] Thk. PC Board
(Solder Side of Board Shown)

Note: Consult Product Drawing for details on placing headers onto PC boards.

Base Part Numbers

Straight Posts				Right-Angle Posts			
				Without Pegs Only			
With Pegs		Without Pegs		Front Bend		Rear Bend	
Header Part Nos.	RoHS Equiv.	Header Part Nos.	RoHS Equiv.	Header Part Nos.	RoHS Equiv.	Header Part Nos.	RoHS Equiv.
Standard UL94V-0, Tin Plated							
644486	**22-34**	644861	**22-34**	644488	**22-34**	644803	**22-34**
Standard UL94V-0, .000030 [0.00076] Gold Plated							
644487	**22-34**	—	—	644489	**22-34**	—	—

Header Length

No. of Circuits	Dim. A	Prefix/ Suffix
2	**.284** 7.21	3- -2
3	**.384** 9.75	3- -3
4	**.484** 12.29	3- -4
5	**.584** 14.83	3- -5
6	**.684** 17.37	3- -6
7	**.784** 19.91	3- -7
8	**.884** 22.45	3- -8
9	**.984** 24.99	3- -9
10	**1.084** 27.53	4- -0
11	**1.184** 30.07	4- -1
12	**1.284** 32.61	4- -2
13	**1.384** 35.15	4- -3
14	**1.484** 37.69	4- -4

Catalog 82056
Revised 6-08

www.tycoelectronics.com

Dimensions are in inches and millimeters unless otherwise specified. Values in brackets are metric equivalents.

Dimensions are shown for reference purposes only. Specifications subject to change.

USA: 1-800-522-6752
Canada: 1-905-470-4425
Mexico: 52-55-1106-0800
C. America: 57-1-254-4444

South America: 55-11-2103-6000
Hong Kong: 852-2735-1628
Japan: 81-44-844-8013
UK: 44-208-420-8341

.100 [2.54] Centerline CST-100 II Crimp Contacts and Housings

Product Facts

- **Low cost wire-to-board interconnections**
- **Wide wire range for single contact**
- **Tin and gold plated contacts**
- **Mates with specified MTA and similar competitive notched headers**
- **Plastic latching feature in housing helps prevent contact backout**
- **Locking ramps and polarizing tabs are standard**
- **For keying purposes use keying plug 641994-1 (page 17)**
- **Recognized under the Component Program of Underwriters Laboratories Inc., File No. E28476**
- **Certified by Canadian Standards Association, File No. LR7189**

For mateability options, see matrix on pages 12 and 13.

For mating half visuals, see pages 21 thru 29 and 32.

See page 15 for an explanation of RoHS lead free equivalents.

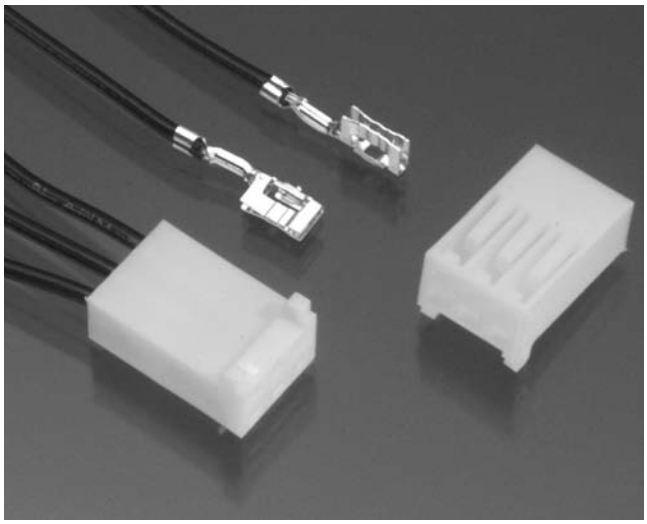

Contacts

Part Numbers		
Tin Plated	15 Au Gold Plated	30 Au Gold Plated
1375819-1 (Strip)	1375819-2 (Strip)	1375819-3 (Strip)
1445336-1 (Loose Piece)	1445336-2 (Loose Piece)	1445336-3 (Loose Piece)

Material and Finish (RoHS Compliant)

Phosphor bronze, pretinned or .000015 [.00038] gold, over nickel
.000030 [0.00076] gold over nickel

Wire Range — 22–26 AWG [0.35–0.13 mm²]

Max. Ins. Dia. — .065 [1.65]

Housing*

Material (RoHS Compliant)

UL94V-0 rated, nylon, white

No. of Pos.	Dim. A	Part Numbers
2	.220 5.59	1375820-2
3	.320 8.13	1375820-3
4	.420 10.67	1375820-4
5	.520 13.21	1375820-5
6	.620 15.75	1375820-6
7	.720 18.29	1375820-7
8	.820 20.83	1375820-8
9	.920 23.37	1375820-9
10	1.020 25.91	1-1375820-0
11	1.120 28.45	1-1375820-1
12	1.220 30.99	1-1375820-2
13	1.320 33.53	1-1375820-3
14	1.420 36.07	1-1375820-4
15	1.520 38.61	1-1375820-5

No. of Pos.	Dim. A	Part Numbers
16	1.620 41.15	1-1375820-6
17	1.720 43.69	1-1375820-7
18	1.820 46.23	1-1375820-8
19	1.920 48.77	1-1375820-9
20	2.020 51.31	2-1375820-0
21	2.120 53.85	2-1375820-1
22	2.220 56.39	2-1375820-2
23	2.320 58.93	2-1375820-3
24	2.420 61.47	2-1375820-4
25	2.520 64.01	2-1375820-5
26	2.620 66.55	2-1375820-6
27	2.720 69.09	2-1375820-7
28	2.820 71.63	2-1375820-8

Application Tooling

Loose Piece Contacts —
Hand Tool No. 58517-3 (408-4064)

Strip Contacts —
AMP-O-LECTRIC Model "G" Termination Machine*
Applicator No. 567373-3
(Request Catalog 65828)

AMP-O-MATIC Stripper-Crimper Machine* Applicator No. 567910-1 or 567827-1 (with CQM) (Request Catalog 65004)

AMPOMATOR CLS IIIG Lead Making Machine* (Request Catalog 82659)

*Requires applicators. For part numbers, call Technical Support.

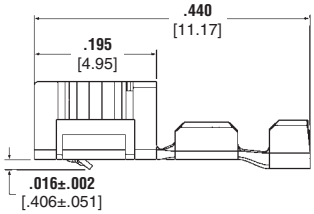

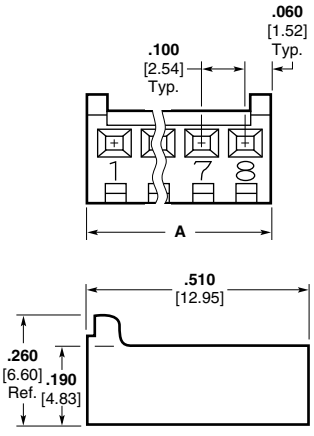

*Housings without polarizing tabs may be manufactured upon request. Minimums may apply. Contact product engineering or product manager for details.

Performance Data

Voltage Rating — 250 vac

Current Rating — 4 amp max.

Low-Level Resistance — 6 mΩ max. initial; 10 mΩ max. final

Insulation Resistance — 1000 MΩ min. initial; 100 MΩ min. final

Operating Temperature — −55° C to +105° C

Technical Documents

Product Specification
108-1948

Application Specification
114-13036

Instruction Sheet
408-8493

Catalog 82056
Revised 6-08

www.tycoelectronics.com

Dimensions are in inches and millimeters unless otherwise specified. Values in brackets are metric equivalents.

Dimensions are shown for reference purposes only. Specifications subject to change.

USA: 1-800-522-6752
Canada: 1-905-470-4425
Mexico: 52-55-1106-0800
C. America: 57-1-254-4444

South America: 55-11-2103-6000
Hong Kong: 852-2735-1628
Japan: 81-44-844-8013
UK: 44-208-420-8341

CST-100 II Shrouded Headers—Straight and Right-Angle

Material and Finish

Housing — UL94V-0 rated, polyester, black

Posts — Copper alloy, tin plated; or .000030 [0.00076] gold over nickel

Notes:
1. Post(s) can be omitted for keying purposes. Specify the desired post(s) to be omitted using the figure to identify Post No. 1.
2. Headers with .000015 [0.00038] gold plated posts are available upon request. Minimums may apply.
3. Gold headers are duplex plated, gold on mating end of post and tin on the solder tail.

For mateability options, see matrix on pages 12 and 13.

For mating half visuals, see page 31.

Header Ordering Information

The "Base Part Numbers" Chart at right shows the base part number and number of posts available for the described headers.

Prefixes and suffixes are determined by the number of post positions in the header. For example, the complete part number for a 10-position header with straight posts and with pegs would be:

Base number **644893** plus
prefix-and-suffix
4- — -0

The correct ordering number is
4-644893-0

All part numbers are the RoHS equivalent version. Example:

No. of Pos.	Lead Free RoHS Prefix/Suffix
2	3-644893-2
	thru
14	4-644893-4

See page 15 for an explanation of RoHS lead free equivalents.

Note: All RoHS equivalent part numbers may not be available upon catalog release. If the number you need is not available, please contact Product Engineering to expedite your request.

Note:
CST-100 II shrouded headers **only mate** with CST-100 II housings. All the MTA-100 headers except the MTA-100 shrouded headers mate with CST-100 II housings.

Straight Post (.025 [0.64] Square)

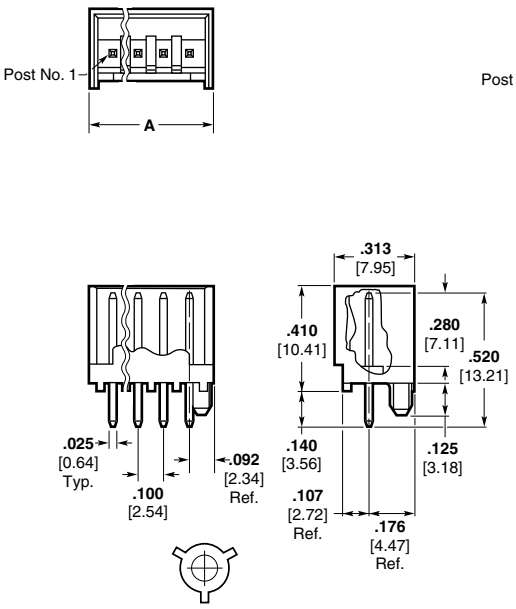

Right-Angle (.025 [0.64] Square)

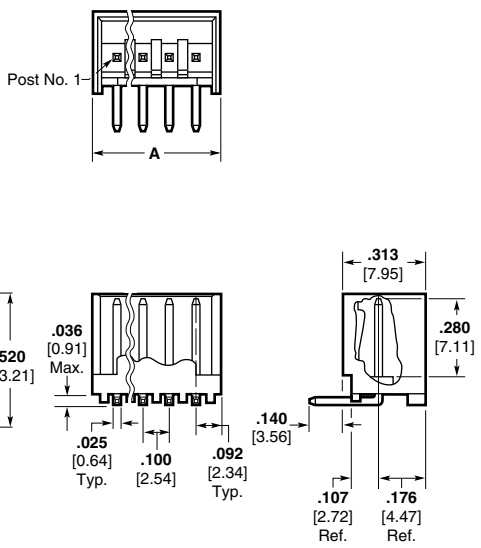

Polarized Retention Peg

Note: Consult Product Drawing for details on placing headers onto PC boards.

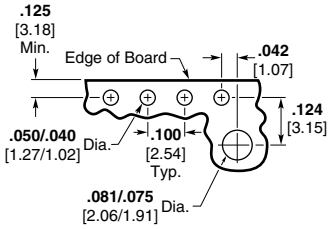

Recommended Mounting Hole Pattern for .062 [1.57] Thk. PC Board
(Solder Side of Board Shown)

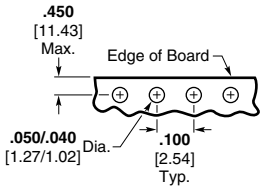

Recommended Mounting Hole Pattern for .062 [1.57] Thk. PC Board
(Solder Side of Board Shown)

Base Part Numbers

Straight Posts				Right-Angle Posts Without Pegs Only	
With Pegs		Without Pegs			
Header Part Nos.	No. of Posts/ RoHS Equiv.	Header Part Nos.	No. of Posts/ RoHS Equiv.	Header Part Nos.	No. of Posts/ RoHS Equiv.
Standard UL94V-0, Tin Plated					
644893	**32-44**	644892	**32-44**	644894	**32-44**
Standard UL94V-0, .000030 [0.00076] Gold Plated					
644897	**32-44**	644896	**32-44**	644898	**32-44**

Header Length

No. of Circuits	Dim. A	Prefix/ Suffix
2	**.284** 7.21	3- -2
3	**.384** 9.75	3- -3
4	**.484** 12.29	3- -4

No. of Circuits	Dim. A	Prefix/ Suffix
5	**.584** 14.83	3- -5
6	**.684** 17.37	3- -6
7	**.784** 19.91	3- -7

No. of Circuits	Dim. A	Prefix/ Suffix
8	**.884** 22.45	3- -8
9	**.984** 24.99	3- -9
10	**1.084** 27.53	4- -0

Catalog 82056
Revised 6-08

www.tycoelectronics.com

Dimensions are in inches and millimeters unless otherwise specified. Values in brackets are metric equivalents.

Dimensions are shown for reference purposes only. Specifications subject to change.

USA: 1-800-522-6752
Canada: 1-905-470-4425
Mexico: 52-55-1106-0800
C. America: 57-1-254-4444

South America: 55-11-2103-6000
Hong Kong: 852-2735-1628
Japan: 81-44-844-8013
UK: 44-208-420-8341

.156 [3.96] Centerline MTA-156 IDC Connectors and Headers

Product Facts

- **Connectors and headers for 2 through 24 positions; wire sizes of 18, 20, 22, 24 and 26 AWG [0.9–0.12 mm²]**
- **Connectors and headers, except shrouded headers, are end-to-end stackable**
- **Quad Connectors for higher current rating (page 54)**
- **Posted connectors for 2, 3, 4, 6, 9, 12, 15 and 24 positions**
- **Card edge connectors for 3, 6, 9, 12, 15, 18 and 20 through 24 positions**
- **Connectors preloaded with IDC contacts**
- **All contacts are slotted for insulation displacement (IDC) termination technique**
- **Connector styles include both closed end and feed-thru, with and without locking ramps and polarizing tabs**
- **Molded ribs on housing do not allow reverse mating**
- **Contacts are lubricated for fretting corrosion protection**
- **Benefits derived from the MTA-156 system include increases quality and ease of handling such as—**
  - **One-step assembly**
  - **No wire stripping**
  - **No contact damage**
  - **Reduced wiring errors**
  - **Simpler tooling**
  - **Simple maintenance and repair**
- **Meets the material requirements of Table 23.1 of UL 1410 Standards for Television Receiver and Video Products (wire-to-post connectors only)**
- **Recognized under the Component Program of Underwriters Laboratories Inc., File No. E28476**
- **Certified by Canadian Standards Association, File No. LR7189**

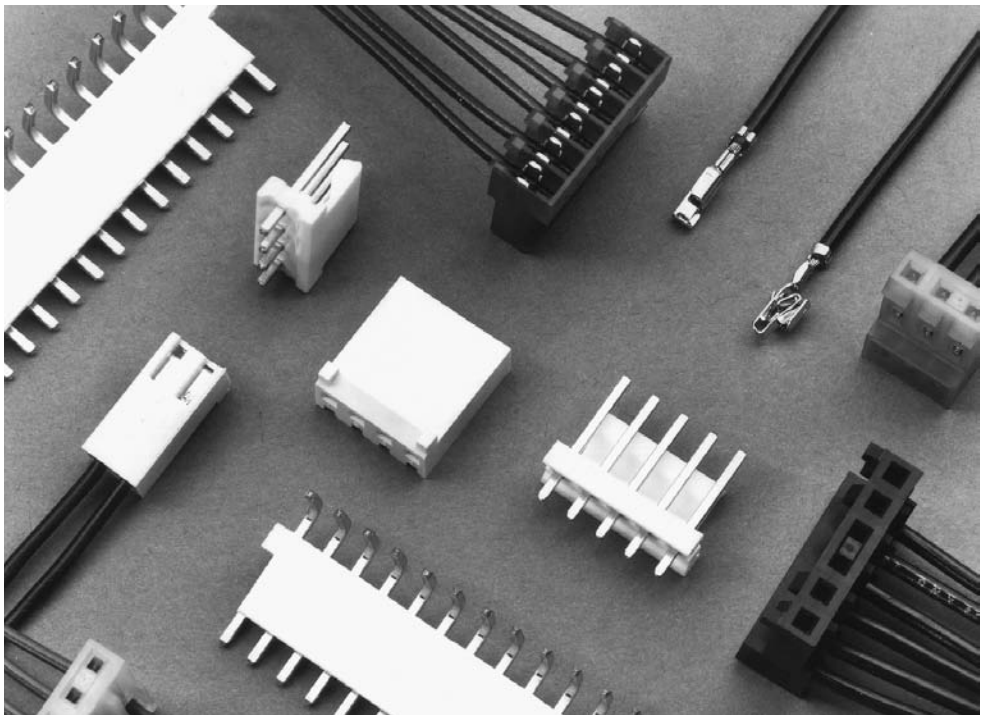

MTA-156 connectors accept discrete and ribbon cable wire sizes ranging from 18–26 AWG [0.9–0.12 mm²] with maximum insulation outside diameter.095 [2.41] for single wire and .070 [1.78] for mass termination of wires. Tin plated solid, fused stranded or stranded (7, 16, and 19 strands) wire with PVC insulation can be used on 18 AWG [0.8–0.9 mm²] MTA-156 connectors; 7, 10, and 19 stranded wire on 20 AWG [0.5–0.6 mm²] MTA-156 connectors; and 7 and 19 stranded wire on 22–26 AWG [0.4–0.12 mm²] MTA-156 connectors.

Only one wire to be terminated into an IDC contact slot.

Mass termination of wire provides the lowest applied cost because it drastically reduces the labor content of virtually any cable or harness assembly required.

The wire-to-post connector housing material is flame retardant thermoplastic, either UL94V-2 or UL94V-0 rated.

A full line of .156 [3.96] centerline headers completes the system. Headers are available with straight or right-angle posts, in flat friction lock and shrouded styles. Headers are available in 2 through 24 positions.

Note: Refer to page 70 for approved wire listings.

Performance Data*

Voltage Rating—600 vac

Current Rating—
7 amp max. for MTA-156 Connector

Low-Level Resistance—
3.0 mΩ max. initial

Dielectric Withstanding Voltage—
2200 vac/1 min.

Insulation Resistance—
5000 MΩ min. initial

Operating Temperature—
−55° C to +105° C

*Refer to the Product Specification for additional electrical, mechanical and environmental performance tests and requirements.

Technical Documents

Product Specification
108-1051 MTA-156 Connectors

Application Specifications
114-1020 MTA-156 Connectors, Posted Connectors and Card Edge Connectors

114-1032 MTA-156 Ribbon Cable Assembly

Catalog 82056
Revised 6-08

www.tycoelectronics.com

Dimensions are in inches and millimeters unless otherwise specified. Values in brackets are metric equivalents.

Dimensions are shown for reference purposes only. Specifications subject to change.

USA: 1-800-522-6752
Canada: 1-905-470-4425
Mexico: 52-55-1106-0800
C. America: 57-1-254-4444

South America: 55-11-2103-6000
Hong Kong: 852-2735-1628
Japan: 81-44-844-8013
UK: 44-208-420-8341

MTA-156 Connector/ Header Mateability Guide

Matrix for Tin Plated Part Numbers

This matrix has been prepared to assist you, our customer, in defining the correct mating halves for the MTA-156 header and connector combination. Where a "Y" is indicated the combination is a valid mating pair. Where an "N" is indicated the combination is not acceptable for mating.

Connectors	Headers	640383	640384	640385	640387	640388	640389	640445	644611	644612	644613	644614	644615	644616	644617	644749	644750	644751	644752	644753	644754	644755	647123	647124	647125	647126	647127	647128	647129	647130	647210	647211	647212	647227	647228	647229	647230	647646	647648	1744017
640426		Y	Y	Y	N	Y	Y	Y	Y	Y	Y	N	Y	Y	Y	Y	Y	Y	Y	Y	Y	Y	N	Y	Y	Y	Y	Y	Y	Y	Y	Y	N	Y	Y	Y	N	Y	Y	Y
640427		Y	Y	Y	N	Y	Y	Y	Y	Y	Y	N	Y	Y	Y	Y	Y	Y	Y	Y	Y	Y	N	Y	Y	Y	Y	Y	Y	Y	Y	Y	N	Y	Y	Y	N	Y	Y	Y
640428		Y	Y	Y	N	Y	Y	Y	Y	Y	Y	N	Y	Y	Y	Y	Y	Y	Y	Y	Y	Y	N	Y	Y	Y	Y	Y	Y	Y	Y	Y	N	Y	Y	Y	N	Y	Y	Y
640429		Y	Y	Y	N	Y	Y	Y	Y	Y	Y	N	Y	Y	Y	Y	Y	Y	Y	Y	Y	Y	N	Y	Y	Y	Y	Y	Y	Y	Y	Y	N	Y	Y	Y	N	Y	Y	Y
640430		Y	Y	Y	N	Y	Y	Y	Y	Y	Y	N	Y	Y	Y	Y	Y	Y	Y	Y	Y	Y	N	Y	Y	Y	Y	Y	Y	Y	Y	Y	N	Y	Y	Y	N	Y	Y	Y
640431		Y	Y	Y	Y	Y	Y	Y	Y	Y	Y	Y	Y	Y	Y	Y	Y	Y	Y	Y	Y	Y	Y	Y	Y	Y	Y	Y	Y	Y	Y	Y	Y	Y	Y	Y	Y	Y	Y	Y
640432		Y	Y	Y	Y	Y	Y	Y	Y	Y	Y	Y	Y	Y	Y	Y	Y	Y	Y	Y	Y	Y	Y	Y	Y	Y	Y	Y	Y	Y	Y	Y	Y	Y	Y	Y	Y	Y	Y	Y
640433		Y	Y	Y	Y	Y	Y	Y	Y	Y	Y	Y	Y	Y	Y	Y	Y	Y	Y	Y	Y	Y	Y	Y	Y	Y	Y	Y	Y	Y	Y	Y	Y	Y	Y	Y	Y	Y	Y	Y
640434		Y	Y	Y	Y	Y	Y	Y	Y	Y	Y	Y	Y	Y	Y	Y	Y	Y	Y	Y	Y	Y	Y	Y	Y	Y	Y	Y	Y	Y	Y	Y	Y	Y	Y	Y	Y	Y	Y	Y
640435		Y	Y	Y	Y	Y	Y	Y	Y	Y	Y	Y	Y	Y	Y	Y	Y	Y	Y	Y	Y	Y	Y	Y	Y	Y	Y	Y	Y	Y	Y	Y	Y	Y	Y	Y	Y	Y	Y	Y
640472		Y	Y	Y	N	Y	Y	Y	Y	Y	N	Y	Y	Y	Y	Y	Y	Y	Y	Y	Y	N	Y	Y	Y	Y	Y	Y	Y	Y	Y	N	Y	Y	Y	N	Y	Y	Y
640473		Y	Y	Y	N	Y	Y	Y	Y	Y	N	Y	Y	Y	Y	Y	Y	Y	Y	Y	Y	N	Y	Y	Y	Y	Y	Y	Y	Y	Y	N	Y	Y	Y	N	Y	Y	Y
640474		Y	Y	Y	N	Y	Y	Y	Y	Y	N	Y	Y	Y	Y	Y	Y	Y	Y	Y	Y	N	Y	Y	Y	Y	Y	Y	Y	Y	Y	N	Y	Y	Y	N	Y	Y	Y
640475		Y	Y	Y	N	Y	Y	Y	Y	Y	N	Y	Y	Y	Y	Y	Y	Y	Y	Y	Y	N	Y	Y	Y	Y	Y	Y	Y	Y	Y	N	Y	Y	Y	N	Y	Y	Y
640476		Y	Y	Y	N	Y	Y	Y	Y	Y	N	Y	Y	Y	Y	Y	Y	Y	Y	Y	Y	N	Y	Y	Y	Y	Y	Y	Y	Y	Y	N	Y	Y	Y	N	Y	Y	Y
640477		Y	Y	Y	Y	Y	Y	Y	Y	Y	Y	Y	Y	Y	Y	Y	Y	Y	Y	Y	Y	Y	Y	Y	Y	Y	Y	Y	Y	Y	Y	Y	Y	Y	Y	Y	Y	Y	Y	Y
640478		Y	Y	Y	Y	Y	Y	Y	Y	Y	Y	Y	Y	Y	Y	Y	Y	Y	Y	Y	Y	Y	Y	Y	Y	Y	Y	Y	Y	Y	Y	Y	Y	Y	Y	Y	Y	Y	Y	Y
640479		Y	Y	Y	Y	Y	Y	Y	Y	Y	Y	Y	Y	Y	Y	Y	Y	Y	Y	Y	Y	Y	Y	Y	Y	Y	Y	Y	Y	Y	Y	Y	Y	Y	Y	Y	Y	Y	Y	Y
640480		Y	Y	Y	Y	Y	Y	Y	Y	Y	Y	Y	Y	Y	Y	Y	Y	Y	Y	Y	Y	Y	Y	Y	Y	Y	Y	Y	Y	Y	Y	Y	Y	Y	Y	Y	Y	Y	Y	Y
640481		Y	Y	Y	Y	Y	Y	Y	Y	Y	Y	Y	Y	Y	Y	Y	Y	Y	Y	Y	Y	Y	Y	Y	Y	Y	Y	Y	Y	Y	Y	Y	Y	Y	Y	Y	Y	Y	Y	Y
640595		Y	Y	Y	N	Y	Y	Y	Y	Y	N	Y	Y	Y	Y	Y	Y	Y	Y	Y	Y	N	Y	Y	Y	Y	Y	Y	Y	Y	Y	N	Y	Y	Y	N	Y	Y	Y
640599		Y	Y	Y	N	Y	Y	Y	Y	Y	N	Y	Y	Y	Y	Y	Y	Y	Y	Y	Y	N	Y	Y	Y	Y	Y	Y	Y	Y	Y	N	Y	Y	Y	N	Y	Y	Y
640600		Y	Y	Y	N	Y	Y	Y	Y	Y	N	Y	Y	Y	Y	Y	Y	Y	Y	Y	Y	N	Y	Y	Y	Y	Y	Y	Y	Y	Y	N	Y	Y	Y	N	Y	Y	Y
640601		Y	Y	Y	N	Y	Y	Y	Y	Y	N	Y	Y	Y	Y	Y	Y	Y	Y	Y	Y	N	Y	Y	Y	Y	Y	Y	Y	Y	Y	N	Y	Y	Y	N	Y	Y	Y
640602		Y	Y	Y	N	Y	Y	Y	Y	Y	N	Y	Y	Y	Y	Y	Y	Y	Y	Y	Y	N	Y	Y	Y	Y	Y	Y	Y	Y	Y	N	Y	Y	Y	N	Y	Y	Y
640604		Y	Y	Y	Y	Y	Y	Y	Y	Y	Y	Y	Y	Y	Y	Y	Y	Y	Y	Y	Y	Y	Y	Y	Y	Y	Y	Y	Y	Y	Y	Y	Y	Y	Y	Y	Y	Y	Y	Y
640605		Y	Y	Y	Y	Y	Y	Y	Y	Y	Y	Y	Y	Y	Y	Y	Y	Y	Y	Y	Y	Y	Y	Y	Y	Y	Y	Y	Y	Y	Y	Y	Y	Y	Y	Y	Y	Y	Y	Y
640606		Y	Y	Y	Y	Y	Y	Y	Y	Y	Y	Y	Y	Y	Y	Y	Y	Y	Y	Y	Y	Y	Y	Y	Y	Y	Y	Y	Y	Y	Y	Y	Y	Y	Y	Y	Y	Y	Y	Y
640607		Y	Y	Y	Y	Y	Y	Y	Y	Y	Y	Y	Y	Y	Y	Y	Y	Y	Y	Y	Y	Y	Y	Y	Y	Y	Y	Y	Y	Y	Y	Y	Y	Y	Y	Y	Y	Y	Y	Y
640608		Y	Y	Y	Y	Y	Y	Y	Y	Y	Y	Y	Y	Y	Y	Y	Y	Y	Y	Y	Y	Y	Y	Y	Y	Y	Y	Y	Y	Y	Y	Y	Y	Y	Y	Y	Y	Y	Y	Y
641301		Y	Y	Y	N	Y	Y	Y	Y	Y	N	Y	Y	Y	Y	Y	Y	Y	Y	Y	Y	N	Y	Y	Y	Y	Y	Y	Y	Y	Y	N	Y	Y	Y	N	Y	Y	Y
641302		Y	Y	Y	N	Y	Y	Y	Y	Y	N	Y	Y	Y	Y	Y	Y	Y	Y	Y	Y	N	Y	Y	Y	Y	Y	Y	Y	Y	Y	N	Y	Y	Y	N	Y	Y	Y
641303		Y	Y	Y	N	Y	Y	Y	Y	Y	N	Y	Y	Y	Y	Y	Y	Y	Y	Y	Y	N	Y	Y	Y	Y	Y	Y	Y	Y	Y	N	Y	Y	Y	N	Y	Y	Y
641304		Y	Y	Y	N	Y	Y	Y	Y	Y	N	Y	Y	Y	Y	Y	Y	Y	Y	Y	Y	N	Y	Y	Y	Y	Y	Y	Y	Y	Y	N	Y	Y	Y	N	Y	Y	Y
641305		Y	Y	Y	N	Y	Y	Y	Y	Y	N	Y	Y	Y	Y	Y	Y	Y	Y	Y	Y	N	Y	Y	Y	Y	Y	Y	Y	Y	Y	N	Y	Y	Y	N	Y	Y	Y
641306		Y	Y	Y	Y	Y	Y	Y	Y	Y	Y	Y	Y	Y	Y	Y	Y	Y	Y	Y	Y	Y	Y	Y	Y	Y	Y	Y	Y	Y	Y	Y	Y	Y	Y	Y	Y	Y	Y	Y
641307		Y	Y	Y	Y	Y	Y	Y	Y	Y	Y	Y	Y	Y	Y	Y	Y	Y	Y	Y	Y	Y	Y	Y	Y	Y	Y	Y	Y	Y	Y	Y	Y	Y	Y	Y	Y	Y	Y	Y
641308		Y	Y	Y	Y	Y	Y	Y	Y	Y	Y	Y	Y	Y	Y	Y	Y	Y	Y	Y	Y	Y	Y	Y	Y	Y	Y	Y	Y	Y	Y	Y	Y	Y	Y	Y	Y	Y	Y	Y
641309		Y	Y	Y	Y	Y	Y	Y	Y	Y	Y	Y	Y	Y	Y	Y	Y	Y	Y	Y	Y	Y	Y	Y	Y	Y	Y	Y	Y	Y	Y	Y	Y	Y	Y	Y	Y	Y	Y	Y
641310		Y	Y	Y	Y	Y	Y	Y	Y	Y	Y	Y	Y	Y	Y	Y	Y	Y	Y	Y	Y	Y	Y	Y	Y	Y	Y	Y	Y	Y	Y	Y	Y	Y	Y	Y	Y	Y	Y	Y
643817		Y	Y	Y	N	Y	Y	Y	Y	Y	N	Y	Y	Y	Y	Y	Y	Y	Y	Y	Y	N	Y	Y	Y	Y	Y	Y	Y	Y	Y	N	Y	Y	Y	N	Y	Y	Y
643818		Y	Y	Y	N	Y	Y	Y	Y	Y	N	Y	Y	Y	Y	Y	Y	Y	Y	Y	Y	N	Y	Y	Y	Y	Y	Y	Y	Y	Y	N	Y	Y	Y	N	Y	Y	Y
643819		Y	Y	Y	N	Y	Y	Y	Y	Y	N	Y	Y	Y	Y	Y	Y	Y	Y	Y	Y	N	Y	Y	Y	Y	Y	Y	Y	Y	Y	N	Y	Y	Y	N	Y	Y	Y
643820		Y	Y	Y	N	Y	Y	Y	Y	Y	N	Y	Y	Y	Y	Y	Y	Y	Y	Y	Y	N	Y	Y	Y	Y	Y	Y	Y	Y	Y	N	Y	Y	Y	N	Y	Y	Y
643821		Y	Y	Y	N	Y	Y	Y	Y	Y	N	Y	Y	Y	Y	Y	Y	Y	Y	Y	Y	N	Y	Y	Y	Y	Y	Y	Y	Y	Y	N	Y	Y	Y	N	Y	Y	Y
644082		Y	Y	Y	Y	Y	Y	Y	Y	Y	Y	Y	Y	Y	Y	Y	Y	Y	Y	Y	Y	Y	Y	Y	Y	Y	Y	Y	Y	Y	Y	Y	Y	Y	Y	Y	Y	Y	Y	Y
644461		Y	Y	Y	Y	Y	Y	Y	Y	Y	Y	Y	Y	Y	Y	Y	Y	Y	Y	Y	Y	Y	Y	Y	Y	Y	Y	Y	Y	Y	Y	Y	Y	Y	Y	Y	Y	Y	Y	Y
644462		Y	Y	Y	Y	Y	Y	Y	Y	Y	Y	Y	Y	Y	Y	Y	Y	Y	Y	Y	Y	Y	Y	Y	Y	Y	Y	Y	Y	Y	Y	Y	Y	Y	Y	Y	Y	Y	Y	Y
644463		Y	Y	Y	Y	Y	Y	Y	Y	Y	Y	Y	Y	Y	Y	Y	Y	Y	Y	Y	Y	Y	Y	Y	Y	Y	Y	Y	Y	Y	Y	Y	Y	Y	Y	Y	Y	Y	Y	Y
644464		Y	Y	Y	Y	Y	Y	Y	Y	Y	Y	Y	Y	Y	Y	Y	Y	Y	Y	Y	Y	Y	Y	Y	Y	Y	Y	Y	Y	Y	Y	Y	Y	Y	Y	Y	Y	Y	Y	Y
644465		Y	Y	Y	N	Y	Y	Y	Y	Y	N	Y	Y	Y	Y	Y	Y	Y	Y	Y	Y	N	Y	Y	Y	Y	Y	Y	Y	Y	Y	N	Y	Y	Y	N	Y	Y	Y
644466		Y	Y	Y	N	Y	Y	Y	Y	Y	N	Y	Y	Y	Y	Y	Y	Y	Y	Y	Y	N	Y	Y	Y	Y	Y	Y	Y	Y	Y	N	Y	Y	Y	N	Y	Y	Y
644467		Y	Y	Y	N	Y	Y	Y	Y	Y	N	Y	Y	Y	Y	Y	Y	Y	Y	Y	Y	N	Y	Y	Y	Y	Y	Y	Y	Y	Y	N	Y	Y	Y	N	Y	Y	Y
644468		Y	Y	Y	N	Y	Y	Y	Y	Y	N	Y	Y	Y	Y	Y	Y	Y	Y	Y	Y	N	Y	Y	Y	Y	Y	Y	Y	Y	Y	N	Y	Y	Y	N	Y	Y	Y
644469		Y	Y	Y	Y	Y	Y	Y	Y	Y	Y	Y	Y	Y	Y	Y	Y	Y	Y	Y	Y	Y	Y	Y	Y	Y	Y	Y	Y	Y	Y	Y	Y	Y	Y	Y	Y	Y	Y	Y
644470		Y	Y	Y	Y	Y	Y	Y	Y	Y	Y	Y	Y	Y	Y	Y	Y	Y	Y	Y	Y	Y	Y	Y	Y	Y	Y	Y	Y	Y	Y	Y	Y	Y	Y	Y	Y	Y	Y	Y
644471		Y	Y	Y	Y	Y	Y	Y	Y	Y	Y	Y	Y	Y	Y	Y	Y	Y	Y	Y	Y	Y	Y	Y	Y	Y	Y	Y	Y	Y	Y	Y	Y	Y	Y	Y	Y	Y	Y	Y
644472		Y	Y	Y	Y	Y	Y	Y	Y	Y	Y	Y	Y	Y	Y	Y	Y	Y	Y	Y	Y	Y	Y	Y	Y	Y	Y	Y	Y	Y	Y	Y	Y	Y	Y	Y	Y	Y	Y	Y
644501		Y	Y	Y	Y	Y	Y	Y	Y	Y	Y	Y	Y	Y	Y	Y	Y	Y	Y	Y	Y	Y	Y	Y	Y	Y	Y	Y	Y	Y	Y	Y	Y	Y	Y	Y	Y	Y	Y	Y
644502		Y	Y	Y	Y	Y	Y	Y	Y	Y	Y	Y	Y	Y	Y	Y	Y	Y	Y	Y	Y	Y	Y	Y	Y	Y	Y	Y	Y	Y	Y	Y	Y	Y	Y	Y	Y	Y	Y	Y
644566		Y	Y	Y	Y	Y	Y	Y	Y	Y	Y	Y	Y	Y	Y	Y	Y	Y	Y	Y	Y	Y	Y	Y	Y	Y	Y	Y	Y	Y	Y	Y	Y	Y	Y	Y	Y	Y	Y	Y
644567		Y	Y	Y	Y	Y	Y	Y	Y	Y	Y	Y	Y	Y	Y	Y	Y	Y	Y	Y	Y	Y	Y	Y	Y	Y	Y	Y	Y	Y	Y	Y	Y	Y	Y	Y	Y	Y	Y	Y
644569		Y	Y	Y	Y	Y	Y	Y	Y	Y	Y	Y	Y	Y	Y	Y	Y	Y	Y	Y	Y	Y	Y	Y	Y	Y	Y	Y	Y	Y	Y	Y	Y	Y	Y	Y	Y	Y	Y	Y
644570		Y	Y	Y	Y	Y	Y	Y	Y	Y	Y	Y	Y	Y	Y	Y	Y	Y	Y	Y	Y	Y	Y	Y	Y	Y	Y	Y	Y	Y	Y	Y	Y	Y	Y	Y	Y	Y	Y	Y
644572		Y	Y	Y	Y	Y	Y	Y	Y	Y	Y	Y	Y	Y	Y	Y	Y	Y	Y	Y	Y	Y	Y	Y	Y	Y	Y	Y	Y	Y	Y	Y	Y	Y	Y	Y	Y	Y	Y	Y
644783		Y	Y	Y	N	Y	Y	Y	Y	Y	N	Y	Y	Y	Y	Y	Y	Y	Y	Y	Y	N	Y	Y	Y	Y	Y	Y	Y	Y	Y	N	Y	Y	Y	N	Y	Y	Y
644791		Y	Y	Y	Y	Y	Y	Y	Y	Y	Y	Y	Y	Y	Y	Y	Y	Y	Y	Y	Y	Y	Y	Y	Y	Y	Y	Y	Y	Y	Y	Y	Y	Y	Y	Y	Y	Y	Y	Y
644860		Y	Y	Y	N	Y	Y	Y	Y	Y	N	Y	Y	Y	Y	Y	Y	Y	Y	Y	Y	N	Y	Y	Y	Y	Y	Y	Y	Y	Y	N	Y	Y	Y	N	Y	Y	Y
644878		Y	Y	Y	N	Y	Y	Y	Y	Y	N	Y	Y	Y	Y	Y	Y	Y	Y	Y	Y	N	Y	Y	Y	Y	Y	Y	Y	Y	Y	N	Y	Y	Y	N	Y	Y	Y

Catalog 82056
Revised 6-08

www.tycoelectronics.com

Dimensions are in inches and millimeters unless otherwise specified. Values in brackets are metric equivalents.

Dimensions are shown for reference purposes only. Specifications subject to change.

USA: 1-800-522-6752
Canada: 1-905-470-4425
Mexico: 52-55-1106-0800
C. America: 57-1-254-4444

South America: 55-11-2103-6000
Hong Kong: 852-2735-1628
Japan: 81-44-844-8013
UK: 44-208-420-8341

MTA-156 Connector/Header Mateability Guide (Continued)

This matrix has been prepared to assist you, our customer, in defining the correct mating halves for the MTA-156 header and connector combination. Where a "Y" is indicated the combination is a valid mating pair. Where an "N" is indicated the combination is not acceptable for mating.

Matrix for .000030 [0.00076] Gold Plated Part Numbers

Headers

Connectors

	641202	641203	641204	641207	641208	641209	641210	644627	644628	644629	644630	644631	644632	644633	644756	644757	644758	644759	644760	644761	644762	647131	647132	647133	647134	647135	647136
641217	Y	Y	Y	N	Y	Y	Y	Y	Y	Y	N	Y	Y	Y	Y	Y	Y	Y	Y	Y	N	Y	Y	Y	Y	Y	Y
641218	Y	Y	Y	N	Y	Y	Y	Y	Y	Y	N	Y	Y	Y	Y	Y	Y	Y	Y	Y	N	Y	Y	Y	Y	Y	Y
641219	Y	Y	Y	N	Y	Y	Y	Y	Y	Y	N	Y	Y	Y	Y	Y	Y	Y	Y	Y	N	Y	Y	Y	Y	Y	Y
641220	Y	Y	Y	N	Y	Y	Y	Y	Y	Y	N	Y	Y	Y	Y	Y	Y	Y	Y	Y	N	Y	Y	Y	Y	Y	Y
641221	Y	Y	Y	N	Y	Y	Y	Y	Y	Y	N	Y	Y	Y	Y	Y	Y	Y	Y	Y	N	Y	Y	Y	Y	Y	Y
641222	Y	Y	Y	Y	Y	Y	Y	Y	Y	Y	Y	Y	Y	Y	Y	Y	Y	Y	Y	Y	Y	Y	Y	Y	Y	Y	Y
641223	Y	Y	Y	Y	Y	Y	Y	Y	Y	Y	Y	Y	Y	Y	Y	Y	Y	Y	Y	Y	Y	Y	Y	Y	Y	Y	Y
641224	Y	Y	Y	Y	Y	Y	Y	Y	Y	Y	Y	Y	Y	Y	Y	Y	Y	Y	Y	Y	Y	Y	Y	Y	Y	Y	Y
641225	Y	Y	Y	Y	Y	Y	Y	Y	Y	Y	Y	Y	Y	Y	Y	Y	Y	Y	Y	Y	Y	Y	Y	Y	Y	Y	Y
641226	Y	Y	Y	Y	Y	Y	Y	Y	Y	Y	Y	Y	Y	Y	Y	Y	Y	Y	Y	Y	Y	Y	Y	Y	Y	Y	Y
641227	Y	Y	Y	N	Y	Y	Y	Y	Y	Y	N	Y	Y	Y	Y	Y	Y	Y	Y	Y	N	Y	Y	Y	Y	Y	Y
641228	Y	Y	Y	N	Y	Y	Y	Y	Y	Y	N	Y	Y	Y	Y	Y	Y	Y	Y	Y	N	Y	Y	Y	Y	Y	Y
641229	Y	Y	Y	N	Y	Y	Y	Y	Y	Y	N	Y	Y	Y	Y	Y	Y	Y	Y	Y	N	Y	Y	Y	Y	Y	Y
641230	Y	Y	Y	N	Y	Y	Y	Y	Y	Y	N	Y	Y	Y	Y	Y	Y	Y	Y	Y	N	Y	Y	Y	Y	Y	Y
641231	Y	Y	Y	N	Y	Y	Y	Y	Y	Y	N	Y	Y	Y	Y	Y	Y	Y	Y	Y	N	Y	Y	Y	Y	Y	Y
641232	Y	Y	Y	Y	Y	Y	Y	Y	Y	Y	Y	Y	Y	Y	Y	Y	Y	Y	Y	Y	Y	Y	Y	Y	Y	Y	Y
641233	Y	Y	Y	Y	Y	Y	Y	Y	Y	Y	Y	Y	Y	Y	Y	Y	Y	Y	Y	Y	Y	Y	Y	Y	Y	Y	Y
641234	Y	Y	Y	Y	Y	Y	Y	Y	Y	Y	Y	Y	Y	Y	Y	Y	Y	Y	Y	Y	Y	Y	Y	Y	Y	Y	Y
641235	Y	Y	Y	Y	Y	Y	Y	Y	Y	Y	Y	Y	Y	Y	Y	Y	Y	Y	Y	Y	Y	Y	Y	Y	Y	Y	Y
641236	Y	Y	Y	Y	Y	Y	Y	Y	Y	Y	Y	Y	Y	Y	Y	Y	Y	Y	Y	Y	Y	Y	Y	Y	Y	Y	Y
644460	Y	Y	Y	N	Y	Y	Y	Y	Y	Y	N	Y	Y	Y	Y	Y	Y	Y	Y	Y	N	Y	Y	Y	Y	Y	Y
644662	Y	Y	Y	N	Y	Y	Y	Y	Y	Y	N	Y	Y	Y	Y	Y	Y	Y	Y	Y	N	Y	Y	Y	Y	Y	Y
644663	Y	Y	Y	N	Y	Y	Y	Y	Y	Y	N	Y	Y	Y	Y	Y	Y	Y	Y	Y	N	Y	Y	Y	Y	Y	Y
644687	Y	Y	Y	Y	Y	Y	Y	Y	Y	Y	Y	Y	Y	Y	Y	Y	Y	Y	Y	Y	Y	Y	Y	Y	Y	Y	Y
644718	Y	Y	Y	N	Y	Y	Y	Y	Y	Y	N	Y	Y	Y	Y	Y	Y	Y	Y	Y	N	Y	Y	Y	Y	Y	Y
644720	Y	Y	Y	N	Y	Y	Y	Y	Y	Y	N	Y	Y	Y	Y	Y	Y	Y	Y	Y	N	Y	Y	Y	Y	Y	Y

Matrix for .000015 [0.00038] Gold Plated Part Numbers

Headers

Connectors

	641113	641114	641115	641118	641119	641120	641121	644763	644764	644765	644766	644767	644768	644769	647139	647140	647141	647142	647143	647144	647649
641148	Y	Y	Y	N	Y	Y	Y	Y	Y	Y	Y	Y	N	Y	Y	Y	Y	Y	Y	Y	Y
641149	Y	Y	Y	N	Y	Y	Y	Y	Y	Y	Y	Y	N	Y	Y	Y	Y	Y	Y	Y	Y
641150	Y	Y	Y	N	Y	Y	Y	Y	Y	Y	Y	Y	N	Y	Y	Y	Y	Y	Y	Y	Y
641151	Y	Y	Y	N	Y	Y	Y	Y	Y	Y	Y	Y	N	Y	Y	Y	Y	Y	Y	Y	Y
641152	Y	Y	Y	N	Y	Y	Y	Y	Y	Y	Y	Y	N	Y	Y	Y	Y	Y	Y	Y	Y
641153	Y	Y	Y	Y	Y	Y	Y	Y	Y	Y	Y	Y	Y	Y	Y	Y	Y	Y	Y	Y	Y
641154	Y	Y	Y	Y	Y	Y	Y	Y	Y	Y	Y	Y	Y	Y	Y	Y	Y	Y	Y	Y	Y
641155	Y	Y	Y	Y	Y	Y	Y	Y	Y	Y	Y	Y	Y	Y	Y	Y	Y	Y	Y	Y	Y
641156	Y	Y	Y	Y	Y	Y	Y	Y	Y	Y	Y	Y	Y	Y	Y	Y	Y	Y	Y	Y	Y
641157	Y	Y	Y	Y	Y	Y	Y	Y	Y	Y	Y	Y	Y	Y	Y	Y	Y	Y	Y	Y	Y
641168	Y	Y	Y	N	Y	Y	Y	Y	Y	Y	Y	Y	N	Y	Y	Y	Y	Y	Y	Y	Y
641169	Y	Y	Y	N	Y	Y	Y	Y	Y	Y	Y	Y	N	Y	Y	Y	Y	Y	Y	Y	Y
641170	Y	Y	Y	N	Y	Y	Y	Y	Y	Y	Y	Y	N	Y	Y	Y	Y	Y	Y	Y	Y
641171	Y	Y	Y	N	Y	Y	Y	Y	Y	Y	Y	Y	N	Y	Y	Y	Y	Y	Y	Y	Y
641172	Y	Y	Y	N	Y	Y	Y	Y	Y	Y	Y	Y	N	Y	Y	Y	Y	Y	Y	Y	Y
641173	Y	Y	Y	Y	Y	Y	Y	Y	Y	Y	Y	Y	Y	Y	Y	Y	Y	Y	Y	Y	Y
641174	Y	Y	Y	Y	Y	Y	Y	Y	Y	Y	Y	Y	Y	Y	Y	Y	Y	Y	Y	Y	Y
641175	Y	Y	Y	Y	Y	Y	Y	Y	Y	Y	Y	Y	Y	Y	Y	Y	Y	Y	Y	Y	Y
641176	Y	Y	Y	Y	Y	Y	Y	Y	Y	Y	Y	Y	Y	Y	Y	Y	Y	Y	Y	Y	Y
641177	Y	Y	Y	Y	Y	Y	Y	Y	Y	Y	Y	Y	Y	Y	Y	Y	Y	Y	Y	Y	Y
644284	Y	Y	Y	N	Y	Y	Y	Y	Y	Y	Y	Y	N	Y	Y	Y	Y	Y	Y	Y	Y
647478	Y	Y	Y	N	Y	Y	Y	Y	Y	Y	Y	Y	N	Y	Y	Y	Y	Y	Y	Y	Y
647479	Y	Y	Y	N	Y	Y	Y	Y	Y	Y	Y	Y	N	Y	Y	Y	Y	Y	Y	Y	Y
647496	Y	Y	Y	Y	Y	Y	Y	Y	Y	Y	Y	Y	Y	Y	Y	Y	Y	Y	Y	Y	Y

Catalog 82056
Revised 6-08

www.tycoelectronics.com

Dimensions are in inches and millimeters unless otherwise specified. Values in brackets are metric equivalents.

Dimensions are shown for reference purposes only. Specifications subject to change.

USA: 1-800-522-6752
Canada: 1-905-470-4425
Mexico: 52-55-1106-0800
C. America: 57-1-254-4444

South America: 55-11-2103-6000
Hong Kong: 852-2735-1628
Japan: 81-44-844-8013
UK: 44-208-420-8341

MTA-156 IDC Connectors—Closed End

Material and Finish

Housing — UL94V-2 rated, nylon, see below for color; or UL94V-0 rated, nylon, black

Contacts — Phosphor bronze, post tin plated, .000030 [0.00076] or .000015 [.00038] post gold plated over nickel

Color Coding by Wire Size for UL94V-2 Connectors

26 AWG — Blue
24 AWG — White
22 AWG — Red
20 AWG — Yellow
18 AWG — Orange

All Wire Sizes in UL94V-0 — Black

Notes:
1. Only connectors with locking ramp and without polarizing tabs mate with posted connectors on page 45.
2. Refer to pages 70 thru 74 for approved wire listing.
3. For strain reliefs and dust covers, see pages 40 and 41.
4. For keying plugs and panel mount end caps, see page 42.
5. Other circuit sizes are available upon request. Minimums may apply.
6. Connector circuits can be molded closed for keying purposes. Minimums may apply.
7. Where no part numbers appear in the chart, parts can be made available upon request. Minimums may apply.
8. To determine connector overall length (Dim. A), multiply .156 x the number of circuits. Example: .156 x 10 circuits equals 1.560 inches [39.62 mm].

Closed End with Locking Ramp

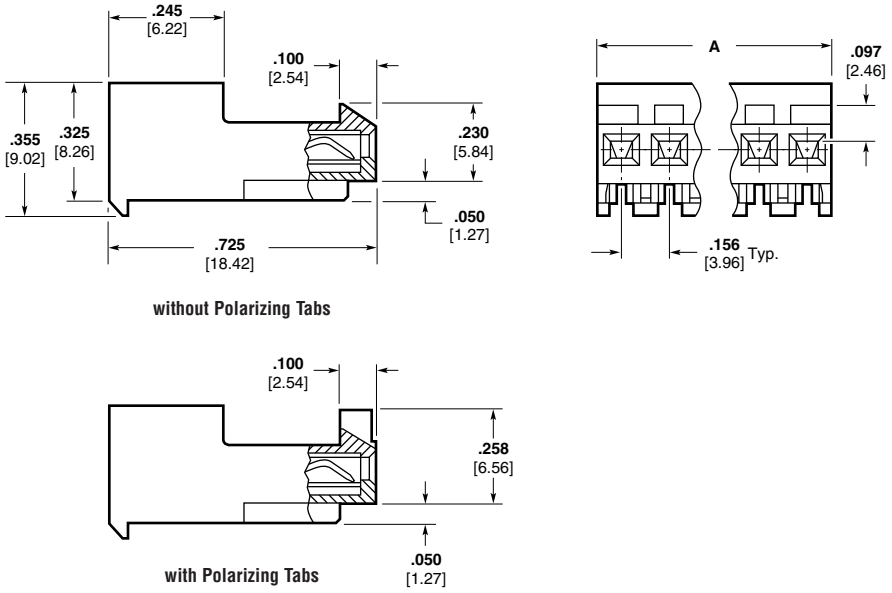

For mateability options, see matrix on pages 34 and 35.

Mating half visuals for Closed End Connectors with Locking Ramp, see pages 45 thru 48, 50, 52, and 53, (49 and 51 Front Bend Headers Only).

Closed End without Locking Ramp

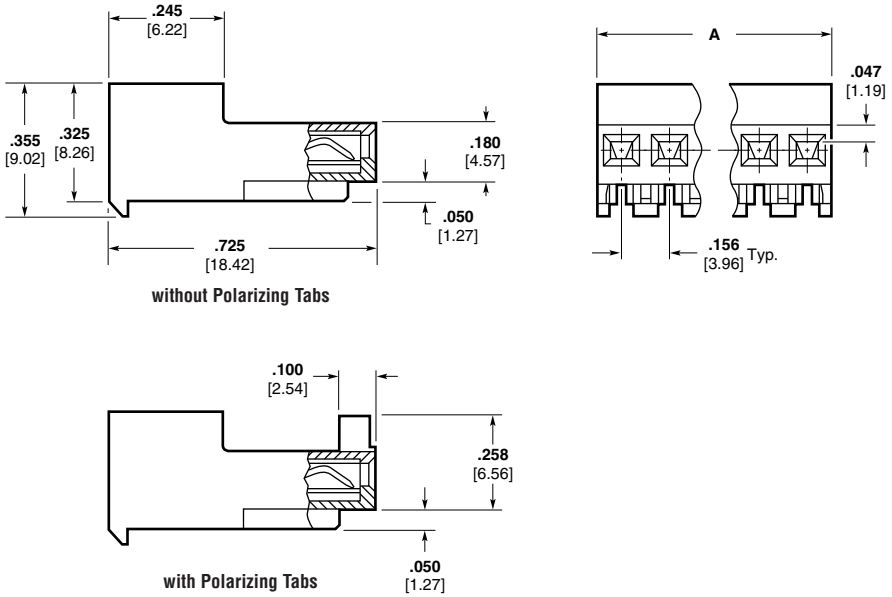

For mateability options, see matrix on pages 34 and 35.

Mating half visuals for Closed End Connectors without Locking Ramp, see pages 46 thru 53.

Catalog 82056
Revised 6-08

www.tycoelectronics.com

Dimensions are in inches and millimeters unless otherwise specified. Values in brackets are metric equivalents.

Dimensions are shown for reference purposes only. Specifications subject to change.

USA: 1-800-522-6752
Canada: 1-905-470-4425
Mexico: 52-55-1106-0800
C. America: 57-1-254-4444

South America: 55-11-2103-6000
Hong Kong: 852-2735-1628
Japan: 81-44-844-8013
UK: 44-208-420-8341

MTA-156 IDC Connectors—Closed End (Continued)

Connector Ordering Information

The "Base Part Numbers" Chart at right shows the base part number and number of circuits available for the described connectors.

Prefixes and suffixes are determined by the number of circuit positions in the connector. For example, the complete part number for a 10-position closed end connector with locking ramp and without polarizing tabs for 18 AWG wire would be:

Base number **640426** plus prefix-and-suffix

4- — -0

The correct ordering number is

4-640426-0

All part numbers in **bold face** are the RoHS equivalent version. Example:

No. of Pos.	Lead Free RoHS Prefix/Suffix
2	3-640426-2
3	3-640426-3
4	3-640426-4
5	3-640426-5
6	3-640426-6
7	3-640426-7
8	3-640426-8
9	3-640426-9
10	4-640426-0
11	4-640426-1
12	4-640426-2
13	4-640426-3
14	4-640426-4
15	4-640426-5
16	4-640426-6
17	4-640426-7
18	4-640426-8
19	4-640426-9
20	5-640426-0
21	5-640426-1
22	5-640426-2
23	5-640426-3
24	5-640426-4

Note: All RoHS equivalent part numbers may not be available upon catalog release. If the number you need is not available, please contact Product Engineering to expedite your request.

Base Part Numbers

Connector Type & Wire Size	Closed End with Locking Ramp				Closed End without Locking Ramp			
	Without Tabs		With Tabs		Without Tabs		With Tabs	
	Connector Part Nos.	Connector RoHS Equiv.	Connector Part Nos.	Connector RoHS Equiv.	Connector Part Nos.	RoHS Equiv.	Part Nos.	RoHS Equiv.
Standard UL94V-2, Tin Plated								
18 AWG 0.8–0.9 mm²	640426	**32–54**	643817	**32–54**	640431	**32–54**	644461[1]	**32–44**
20 AWG 0.5–0.6 mm²	640427	**32–54**	643818	**32–54**	640432	**32–54**	644462[1]	**32–44**
22 AWG 0.3–0.4 mm²	640428	**32–54**	643819	**32–54**	640433	**32–54**	644463[1]	**32–44**
24 AWG 0.2 mm²	640429	**32–54**	643820	**32–54**	640434	**32–54**	644464[1]	**32–44**
26 AWG 0.12–0.15 mm²	640430	**32–54**	643821	**32–54**	640435	**32–54**	—	—
Tape Mounted on Reel UL94V-2, Tin Plated								
18 AWG 0.8–0.9 mm²	640472	**32–54**	644878	**32–54**	640477	**32–54**	—	—
20 AWG 0.5–0.6 mm²	640473	**32–54**	—	—	640478	**32–54**	—	—
22 AWG 0.3–0.4 mm²	640474	**32–54**	644783	**32–54**	640479	**32–54**	644791[1]	**32–44**
24 AWG 0.2 mm²	640475	**32–54**	—	—	640480	**32–54**	—	—
26 AWG 0.12–0.15 mm²	640476	**32–54**	—	—	640481	**32–54**	—	—
Standard UL94V-2, .000030 [0.00076] Gold Plated								
18 AWG 0.8–0.9 mm²	641217	**32–54**	644460[1]	**32–42**	641222	**32–54**	—	—
20 AWG 0.5–0.6 mm²	641218	**32–54**	644663[1]	**32–42**	641223	**32–54**	—	—
22 AWG 0.3–0.4 mm²	641219	**32–54**	644662[1]	**32–42**	641224	**32–54**	644687[1]	**32–44**
24 AWG 0.2 mm²	641220	**32–54**	—	—	641225	**32–54**	—	—
26 AWG 0.12–0.15 mm²	641221	**32–54**	—	—	641226	**32–54**	—	—
Standard UL94V-2, .000015 [0.00038] Gold Plated								
18 AWG 0.8–0.9 mm²	641148	**32–54**	644284[1]	**32–42**	641153	**32–54**	—	—
20 AWG 0.5–0.6 mm²	641149	**32–54**	—	—	641154	**32–54**	—	—
22 AWG 0.3–0.4 mm²	641150	**32–54**	647478[1]	**32–42**	641155	**32–54**	—	—
24 AWG 0.2 mm²	641151	**32–54**	—	—	641156	**32–54**	—	—
26 AWG 0.12–0.15 mm²	641152	**32–54**	—	—	641157	**32–54**	—	—
Standard UL94V-0, Tin Plated (Black in color)								
18 AWG 0.8–0.9 mm²	644860[1]	**32–42**	—	—	644502[1]	**32–42**	644082[1]	**32–42**
22 AWG 0.3–0.4 mm²	—	—	—	—	644501[1]	**32–42**	644566[1]	**32–42**

[1] Other circuit sizes are available upon request. Minimums may apply.

Note: Blocked circuit configurations are available upon request. Contact product engineer or product manager for details. Minimums may apply.

Catalog 82056
Revised 6-08

www.tycoelectronics.com

Dimensions are in inches and millimeters unless otherwise specified. Values in brackets are metric equivalents.

Dimensions are shown for reference purposes only. Specifications subject to change.

USA: 1-800-522-6752
Canada: 1-905-470-4425
Mexico: 52-55-1106-0800
C. America: 57-1-254-4444

South America: 55-11-2103-6000
Hong Kong: 852-2735-1628
Japan: 81-44-844-8013
UK: 44-208-420-8341

MTA-156 IDC Connectors—Feed-Thru

Material and Finish

Housing — UL94V-2 rated, nylon, see below for color; or UL94V-0 rated, nylon, black

Contacts — Phosphor bronze; post tin plated, .000030 [.00076] or .000015 [.00038] post gold plated over nickel

Color Coding by Wire Size for UL94V-2 Connectors

26 AWG — Blue
24 AWG — White
22 AWG — Red
20 AWG — Yellow
18 AWG — Orange

All Wire Sizes in UL94V-0 — Black

Notes:
1. Only connectors with locking ramp and without polarizing tabs mate with posted connectors on page 45.
2. Refer to pages 70 thru 74 for approved wire listing.
3. For strain reliefs and dust covers, see pages 40 and 41.
4. For keying plugs and panel mount end caps, see page 42.
5. Other circuit sizes are available upon request. Minimums may apply.
6. Connector circuits can be molded closed for keying purposes. Minimums may apply.
7. Where no part numbers appear in the chart, parts can be made available upon request. Minimums may apply.
8. To determine connector overall length (Dim. A), multiply .156 x the number of circuits. Example: .156 x 10 circuits equals 1.560 inches [39.62 mm].

Feed-Thru with Locking Ramp

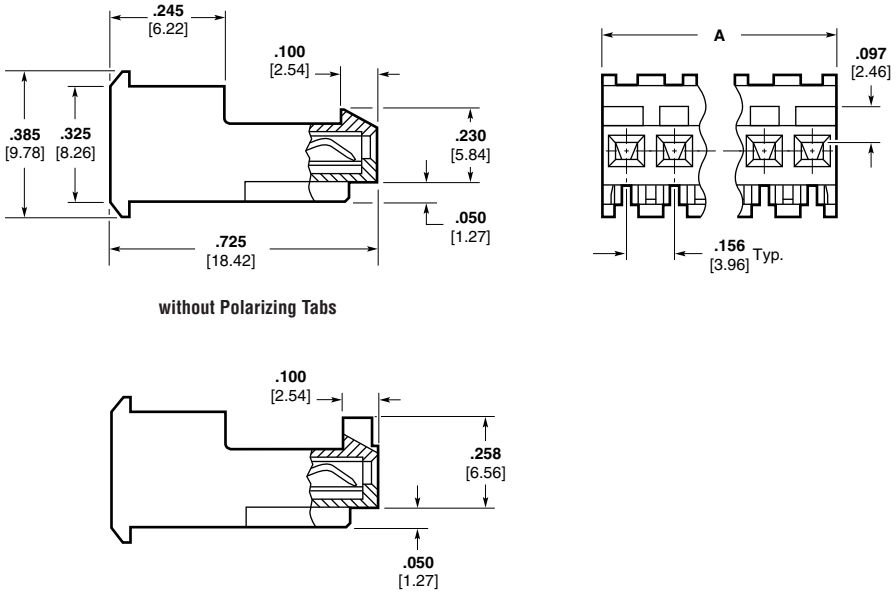

without Polarizing Tabs

with Polarizing Tabs

For mateability options, see matrix on pages 34 and 35.

Mating half visuals for Feed–Thru Connectors with Locking Ramp, see pages 45 thru 48, 50, 52, and 53, (49 and 51 Front Bend Headers Only).

Feed-Thru without Locking Ramp

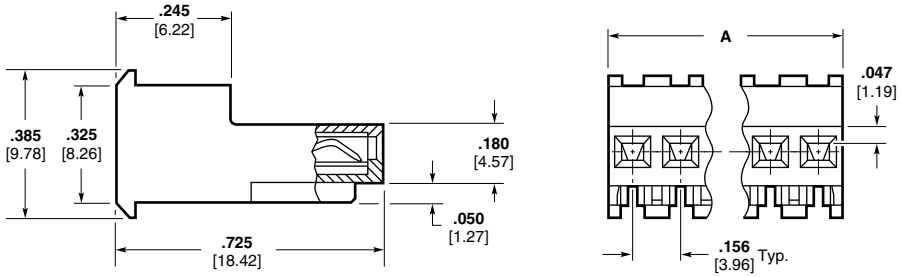

without Polarizing Tabs

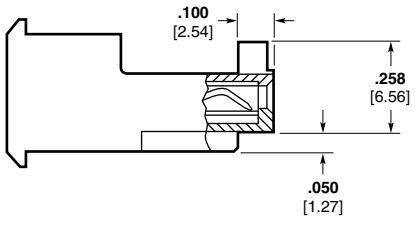

with Polarizing Tabs

For mateability options, see matrix on pages 34 and 35.

Mating half visuals for Feed–Thru Connectors without Locking Ramp, see pages 46 thru 53.

Catalog 82056
Revised 6-08

www.tycoelectronics.com

Dimensions are in inches and millimeters unless otherwise specified. Values in brackets are metric equivalents.

Dimensions are shown for reference purposes only. Specifications subject to change.

USA: 1-800-522-6752
Canada: 1-905-470-4425
Mexico: 52-55-1106-0800
C. America: 57-1-254-4444

South America: 55-11-2103-6000
Hong Kong: 852-2735-1628
Japan: 81-44-844-8013
UK: 44-208-420-8341

MTA-156 IDC Connectors—Feed-Thru (Continued)

Connector Ordering Information

The "Base Part Numbers" Chart at right shows the base part number and number of circuits available for the described connectors.

Prefixes and suffixes are determined by the number of circuit positions in the connector. For example, the complete part number for a 10-position feed-thru connector with locking ramp and without polarizing tabs for 18 AWG wire would be:

Base number **640599** plus

prefix-and-suffix

4- — -0

The correct ordering number is

4-640599-0

The part numbers in **bold face** are the RoHS equivalent version. Example:

No. of Pos.	Lead Free RoHS Prefix/Suffix
2	3-640599-2
3	3-640599-3
4	3-640599-4
5	3-640599-5
6	3-640599-6
7	3-640599-7
8	3-640599-8
9	3-640599-9
10	4-640599-0
11	4-640599-1
12	4-640599-2
13	4-640599-3
14	4-640599-4
15	4-640599-5
16	4-640599-6
17	4-640599-7
18	4-640599-8
19	4-640599-9
20	5-640599-0
21	5-640599-1
22	5-640599-2
23	5-640599-3
24	5-640599-4

Note: All RoHS equivalent part numbers may not be available upon catalog release. If the number you need is not available, please contact Product Engineering to expedite your request.

Base Part Numbers

Connector Type & Wire Size	Feed-Thru with Locking Ramp				Feed-Thru without Locking Ramp			
	Without Tabs		With Tabs		Without Tabs		With Tabs	
	Connector Part Nos.	Connector RoHS Equiv.	Connector Part Nos.	Connector RoHS Equiv.	Connector Part Nos.	RoHS Equiv.	Part Nos.	RoHS Equiv.
Standard UL94V-2, Tin Plated								
18 AWG 0.8–0.9 mm²	640599	**32–54**	644465[1]	**32–44**	640604	**32–54**	644469[1]	**32–44**
20 AWG 0.5–0.6 mm²	640600	**32–54**	644466[1]	**32–44**	640605	**32–54**	644470[1]	**32–44**
22 AWG 0.3–0.4 mm²	640601	**32–54**	644467[1]	**32–44**	640606	**32–54**	644471[1]	**32–44**
24 AWG 0.2 mm²	640602	**32–54**	644468[1]	**32–44**	640607	**32–54**	644472[1]	**32–44**
26 AWG 0.12–0.15 mm²	640595	**32–54**	—	—	640608	**32–54**	—	—
Tape Mounted on Reel UL94V-2, Tin Plated								
18 AWG 0.8–0.9 mm²	641302	**32–54**	—	—	641306	**32–54**	—	—
20 AWG 0.5–0.6 mm²	641303	**32–54**	—	—	641307	**32–54**	—	—
22 AWG 0.3–0.4 mm²	641304	**32–54**	—	—	641308	**32–54**	—	—
24 AWG 0.2 mm²	641305	**32–54**	—	—	641309	**32–54**	—	—
26 AWG 0.12–0.15 mm²	641301	**32–54**	—	—	641310	**32–54**	—	—
Standard UL94V-2, .00003 [.00076] Gold Plated								
18 AWG 0.8–0.9 mm²	641227	**32–54**	644718[1]	**32–44**	641232	**32–54**	—	—
20 AWG 0.5–0.6 mm²	641228	**32–54**	—	—	641233	**32–54**	—	—
22 AWG 0.3–0.4 mm²	641229	**32–54**	644720[1]	**32–44**	641234	**32–54**	—	—
24 AWG 0.2 mm²	641230	**32–54**	—	—	641235	**32–54**	—	—
26 AWG 0.12–0.15 mm²	641231	**32–54**	—	—	641236	**32–54**	—	—
Standard UL94V-2, .000015 [.00038] Gold Plated								
18 AWG 0.8–0.9 mm²	641168	**32–54**	647479[1]	**32–42**	641173	**32–54**	—	—
20 AWG 0.5–0.6 mm²	641169	**32–54**	—	—	641174	**32–54**	—	—
22 AWG 0.3–0.4 mm²	641170	**32–54**	647496[1]	**32–42**	641175	**32–54**	—	—
24 AWG 0.2 mm²	641171	**32–54**	—	—	641176	**32–54**	—	—
26 AWG 0.12–0.15 mm²	641172	**32–54**	—	—	641177	**32–54**	—	—
Standard UL94V-0, Tin Plated								
18 AWG 0.8–0.9 mm²	—	—	—	—	644567[1]	**32–42**	644570[1]	**32–42**
22 AWG 0.3–0.4 mm²	—	—	—	—	644569[1]	**32–42**	644572[1]	**32–42**

[1] Other circuit sizes are available upon request. Minimums may apply.

Note: Blocked circuit configurations are available upon request. Contact product engineer or product manager for details. Minimums may apply.

Catalog 82056
Revised 6-08

www.tycoelectronics.com

Dimensions are in inches and millimeters unless otherwise specified. Values in brackets are metric equivalents.

Dimensions are shown for reference purposes only. Specifications subject to change.

USA: 1-800-522-6752
Canada: 1-905-470-4425
Mexico: 52-55-1106-0800
C. America: 57-1-254-4444

South America: 55-11-2103-6000
Hong Kong: 852-2735-1628
Japan: 81-44-844-8013
UK: 44-208-420-8341

MTA-156 Connector Accessories

Closed End Covers

Material (RoHS Compliant)

Strain Relief Covers — UL94V-2 rated, nylon, white

Dust Covers — UL94V-0 rated, polyester, white

Strain Relief Covers

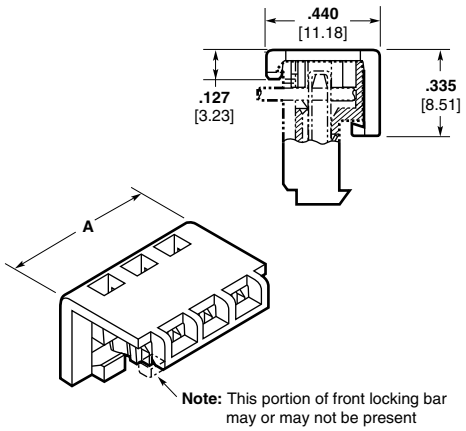

Note: This portion of front locking bar may or may not be present

Dust Covers

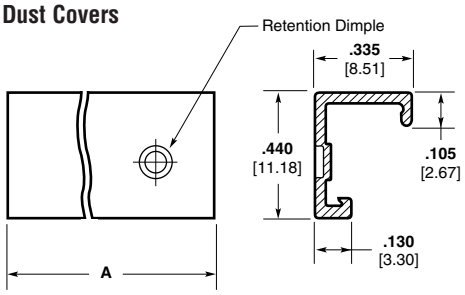

Base Part Numbers

Closed End			
Strain Relief Covers		Dust Covers	
Cover Part Nos.	No. of Circuits	Cover Part Nos.	No. of Circuits
643067	2–24	640551	2–24

Feed-Thru Covers

Material (RoHS Compliant)

Strain Relief Covers — UL94V-2 rated, nylon, white

Dust Covers — UL94V-0 rated, polyester, white

Strain Relief Covers

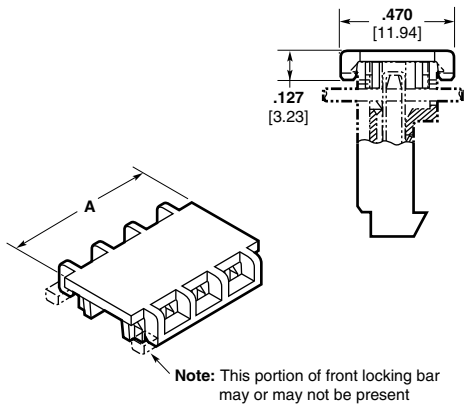

Note: This portion of front locking bar may or may not be present

Dust Covers

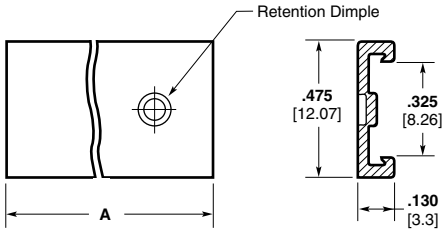

Base Part Numbers

Feed-Thru			
Strain Relief Covers		Dust Covers	
Cover Part Nos.	No. of Circuits	Cover Part Nos.	No. of Circuits
643071	2–24	640643	2–24

Cover Ordering Information

The "Base Part Numbers" Chart at right shows the base part number and number of circuits available for the described cover.

Prefixes and suffixes are determined by the number of circuit positions in the cover. For example, the complete part number for a 10-position closed-end strain relief cover would be:

Base number **643067** plus

prefix-and-suffix

1- — -0

The correct ordering number is

1-643067-0

Cover Length

No. of Circuits	Dim. A	Prefix/ Suffix
2	**.312** 7.92	-2
3	**.468** 11.89	-3
4	**.624** 15.85	-4
5	**.780** 19.81	-5
6	**.936** 23.77	-6
7	**1.092** 27.74	-7
8	**1.248** 31.7	-8
9	**1.404** 35.66	-9
10	**1.560** 39.62	1- -0
11	**1.716** 43.59	1- -1
12	**1.872** 47.55	1- -2
13	**2.028** 51.51	1- -3
14	**2.184** 55.47	1- -4
15	**2.340** 59.44	1- -5
16	**2.496** 63.4	1- -6
17	**2.652** 67.36	1- -7
18	**2.808** 71.32	1- -8
19	**2.964** 75.29	1- -9
20	**3.120** 79.25	2- -0
21	**3.276** 83.21	2- -1
22	**3.432** 87.17	2- -2
23	**3.588** 91.14	2- -3
24	**3.744** 95.1	2- -4

Catalog 82056
Revised 6-08

www.tycoelectronics.com

Dimensions are in inches and millimeters unless otherwise specified. Values in brackets are metric equivalents.

Dimensions are shown for reference purposes only. Specifications subject to change.

USA: 1-800-522-6752
Canada: 1-905-470-4425
Mexico: 52-55-1106-0800
C. America: 57-1-254-4444

South America: 55-11-2103-6000
Hong Kong: 852-2735-1628
Japan: 81-44-844-8013
UK: 44-208-420-8341

MTA-156 Connector Accessories (Continued)

Replacement IDC Contacts

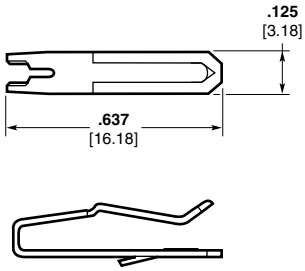

Wire Size		Part Numbers		
AWG	mm²	Tin Plated	.000030 [0.00076] Gold Plated	.000015 [0.00038] Gold Plated
18	0.8–0.9	640631-3	641143-4	641143-3
20	0.5–0.6	640632–3	641144-4	641144-3
22	0.3–0.4	640633-3	641145-4	641145-3
24	0.2	640634-3	641146-4	641146-3
26	0.12–0.15	640635-3	641147-4	641147-3

Material and Finish

Contacts — Phosphor bronze, post tin plated; .000030 [0.00076] or .000015 [0.00038] post gold plated over nickel

Note: Tyco Electronics does not recommend terminating an MTA contact more than one time. Use replacement contacts when required for field repairs or wire changes.

Crimp Snap-in Contacts

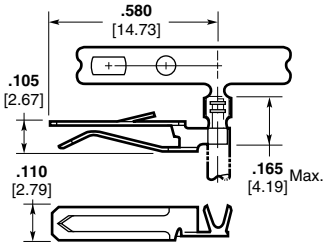

Wire Size		Part Nos.	
AWG	mm²	Loose Piece*	Strip**
26–22	.12–0.3	640557-3	640556-3
22–18	0.3–0.9	640559-3	640558-3

*Hand Tool No. 59837-1 (408-6528)
**AMP-O-LECTRIC Model "G" Termination Machine (Request Catalog 65828)
Note: Requires applicator. For part number, call Technical Support.

Material and Finish

Contacts — Phosphor bronze, tin plated

Special applications for crimp snap-in contacts are:
1. Double wire per contact
2. Coax or shielded wire
3. Mixed wire size in same connector

Note: Only one crimp snap-in contact per connector.

Catalog 82056
Revised 6-08

www.tycoelectronics.com

Dimensions are in inches and millimeters unless otherwise specified. Values in brackets are metric equivalents.

Dimensions are shown for reference purposes only. Specifications subject to change.

USA: 1-800-522-6752
Canada: 1-905-470-4425
Mexico: 52-55-1106-0800
C. America: 57-1-254-4444

South America: 55-11-2103-6000
Hong Kong: 852-2735-1628
Japan: 81-44-844-8013
UK: 44-208-420-8341

MTA-156 Connector Accessories (Continued)

Keying Plugs

Material (RoHS Compliant)

UL94V-2 rated, nylon, natural color

Note: Removal of contact is not necessary when using keying plug.

Loose Piece

Part No. 640629-1 (Flush)
Used with keyed headers

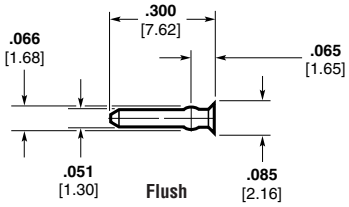

Part No. 640630-1 (Long Nose)
Used with staked post

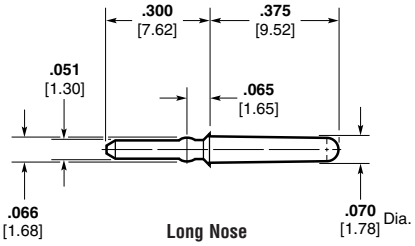

On Carrier Strip

Part No. 641623-1 (Flush)
(10 per strip)

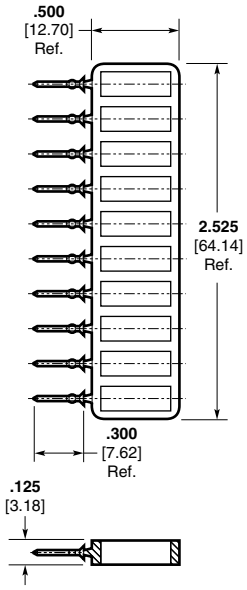

Panel Mount End Caps

Part No. 641440-1
Part No. 641533-1
(2-position only)

Material (RoHS Compliant)

UL94V-2 rated, nylon, black

Notes:
1. Both left-hand and right-hand end caps are attached by a connecting tab. This tab must be broken off prior to installing on connector.
2. For best results attach panel mount end caps to the MTA-156 (IDC) connectors shown on pages 36 thru 39. While not preferred, panel mount end caps can be attached to MTA-156 (IDC) posted connector on page 45.

No. of Pos.	Dim. A
3	**.736** 18.69
4	**.892** 22.66
6	**1.204** 30.58
9	**1.672** 42.47
12	**2.140** 54.36
15	**2.608** 66.24
24	**4.012** 101.9

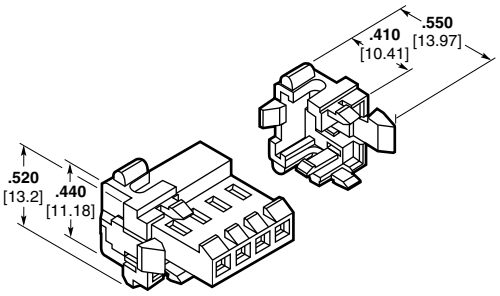

3- thru 24-Position
641440-1
See Note 1

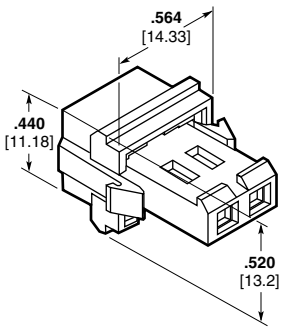

Two-Position Only
641533-1

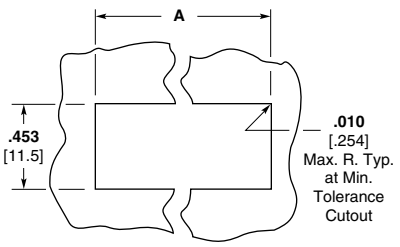

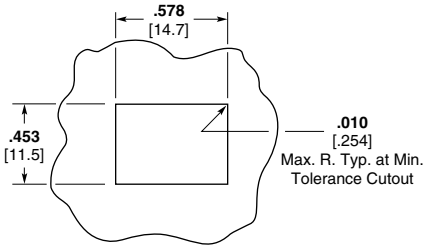

Recommended Panel Cutout
(Recommended Panel Thickness .062 [1.57] to .067 [1.70] max.)

Catalog 82056
Revised 6-08

www.tycoelectronics.com

Dimensions are in inches and millimeters unless otherwise specified. Values in brackets are metric equivalents.

Dimensions are shown for reference purposes only. Specifications subject to change.

USA: 1-800-522-6752
Canada: 1-905-470-4425
Mexico: 52-55-1106-0800
C. America: 57-1-254-4444

South America: 55-11-2103-6000
Hong Kong: 852-2735-1628
Japan: 81-44-844-8013
UK: 44-208-420-8341

MTA-156 Posted Connector/Connector Mateability Guide

Matrix for Tin Plated Part Numbers

This matrix has been prepared to assist you, our customer, in defining the correct mating halves for the MTA-156 posted connector and connector combination. Where a "Y" is indicated the combination is a valid mating pair. Where an "N" is indicated the combination is not acceptable for mating.

Connectors	Posted Connectors									
	641435	641436	641437	641438	641439	641522	641523	641524	641525	641526
640426	Y	Y	Y	Y	Y	Y	Y	Y	Y	Y
640427	Y	Y	Y	Y	Y	Y	Y	Y	Y	Y
640428	Y	Y	Y	Y	Y	Y	Y	Y	Y	Y
640429	Y	Y	Y	Y	Y	Y	Y	Y	Y	Y
640430	Y	Y	Y	Y	Y	Y	Y	Y	Y	Y
640431	N	N	N	N	N	N	N	N	N	N
640432	N	N	N	N	N	N	N	N	N	N
640433	N	N	N	N	N	N	N	N	N	N
640434	N	N	N	N	N	N	N	N	N	N
640435	N	N	N	N	N	N	N	N	N	N
640472	Y	Y	Y	Y	Y	Y	Y	Y	Y	Y
640473	Y	Y	Y	Y	Y	Y	Y	Y	Y	Y
640474	Y	Y	Y	Y	Y	Y	Y	Y	Y	Y
640475	Y	Y	Y	Y	Y	Y	Y	Y	Y	Y
640476	Y	Y	Y	Y	Y	Y	Y	Y	Y	Y
640477	N	N	N	N	N	N	N	N	N	N
640478	N	N	N	N	N	N	N	N	N	N
640479	N	N	N	N	N	N	N	N	N	N
640480	N	N	N	N	N	N	N	N	N	N
640481	N	N	N	N	N	N	N	N	N	N
640595	Y	Y	Y	Y	Y	Y	Y	Y	Y	Y
640599	Y	Y	Y	Y	Y	Y	Y	Y	Y	Y
640600	Y	Y	Y	Y	Y	Y	Y	Y	Y	Y
640601	Y	Y	Y	Y	Y	Y	Y	Y	Y	Y
640602	Y	Y	Y	Y	Y	Y	Y	Y	Y	Y
640604	N	N	N	N	N	N	N	N	N	N
640605	N	N	N	N	N	N	N	N	N	N
640606	N	N	N	N	N	N	N	N	N	N
640607	N	N	N	N	N	N	N	N	N	N
640608	N	N	N	N	N	N	N	N	N	N
641301	Y	Y	Y	Y	Y	Y	Y	Y	Y	Y
641302	Y	Y	Y	Y	Y	Y	Y	Y	Y	Y
641303	Y	Y	Y	Y	Y	Y	Y	Y	Y	Y
641304	Y	Y	Y	Y	Y	Y	Y	Y	Y	Y
641305	Y	Y	Y	Y	Y	Y	Y	Y	Y	Y
641306	N	N	N	N	N	N	N	N	N	N
641307	N	N	N	N	N	N	N	N	N	N
641308	N	N	N	N	N	N	N	N	N	N
641309	N	N	N	N	N	N	N	N	N	N
641310	N	N	N	N	N	N	N	N	N	N
643817	N	N	N	N	N	N	N	N	N	N
643818	N	N	N	N	N	N	N	N	N	N
643819	N	N	N	N	N	N	N	N	N	N
643820	N	N	N	N	N	N	N	N	N	N
643821	N	N	N	N	N	N	N	N	N	N
644082	N	N	N	N	N	N	N	N	N	N
644461	N	N	N	N	N	N	N	N	N	N
644462	N	N	N	N	N	N	N	N	N	N
644463	N	N	N	N	N	N	N	N	N	N
644464	N	N	N	N	N	N	N	N	N	N
644465	N	N	N	N	N	N	N	N	N	N
644466	N	N	N	N	N	N	N	N	N	N
644467	N	N	N	N	N	N	N	N	N	N
644468	N	N	N	N	N	N	N	N	N	N
644469	N	N	N	N	N	N	N	N	N	N
644470	N	N	N	N	N	N	N	N	N	N
644471	N	N	N	N	N	N	N	N	N	N
644472	N	N	N	N	N	N	N	N	N	N
644501	N	N	N	N	N	N	N	N	N	N
644502	N	N	N	N	N	N	N	N	N	N
644566	N	N	N	N	N	N	N	N	N	N
644567	N	N	N	N	N	N	N	N	N	N
644569	N	N	N	N	N	N	N	N	N	N
644570	N	N	N	N	N	N	N	N	N	N
644572	N	N	N	N	N	N	N	N	N	N
644783	N	N	N	N	N	N	N	N	N	N
644791	N	N	N	N	N	N	N	N	N	N
644860	Y	Y	Y	Y	Y	Y	Y	Y	Y	Y
644878	N	N	N	N	N	N	N	N	N	N

Catalog 82056
Revised 6-08

www.tycoelectronics.com

Dimensions are in inches and millimeters unless otherwise specified. Values in brackets are metric equivalents.

Dimensions are shown for reference purposes only. Specifications subject to change.

USA: 1-800-522-6752
Canada: 1-905-470-4425
Mexico: 52-55-1106-0800
C. America: 57-1-254-4444

South America: 55-11-2103-6000
Hong Kong: 852-2735-1628
Japan: 81-44-844-8013
UK: 44-208-420-8341

MTA-156 Posted Connector/Connector Mateability Guide (Continued)

This matrix has been prepared to assist you, our customer, in defining the correct mating halves for the MTA-156 posted connector and connector combination. Where a "Y" is indicated the combination is a valid mating pair. Where an "N" is indicated the combination is not acceptable for mating.

Matrix for .000030 [0.00076] Gold Plated Part Numbers

Posted Connectors

Connectors

	644807	644809	644812	644814
641217	Y	Y	Y	Y
641218	Y	Y	Y	Y
641219	Y	Y	Y	Y
641220	Y	Y	Y	Y
641221	Y	Y	Y	Y
641222	N	N	N	N
641223	N	N	N	N
641224	N	N	N	N
641225	N	N	N	N
641226	N	N	N	N
641227	Y	Y	Y	Y
641228	Y	Y	Y	Y
641229	Y	Y	Y	Y
641230	Y	Y	Y	Y
641231	Y	Y	Y	Y
641232	N	N	N	N
641233	N	N	N	N
641234	N	N	N	N
641235	N	N	N	N
641236	N	N	N	N
644460	N	N	N	N
644662	N	N	N	N
644663	N	N	N	N
644687	N	N	N	N
644718	N	N	N	N
644720	N	N	N	N

Matrix for .000015 [0.00038] Gold Plated Part Numbers

Posted Connectors

Connectors

	643995	647476	647481	647497
641148	Y	Y	Y	Y
641149	Y	Y	Y	Y
641150	Y	Y	Y	Y
641151	Y	Y	Y	Y
641152	Y	Y	Y	Y
641153	N	N	N	N
641154	N	N	N	N
641155	N	N	N	N
641156	N	N	N	N
641157	N	N	N	N
641168	Y	Y	Y	Y
641169	Y	Y	Y	Y
641170	Y	Y	Y	Y
641171	Y	Y	Y	Y
641172	Y	Y	Y	Y
641173	N	N	N	N
641174	N	N	N	N
641175	N	N	N	N
641176	N	N	N	N
641177	N	N	N	N
644284	N	N	N	N
647478	N	N	N	N
647479	N	N	N	N
647496	N	N	N	N

Catalog 82056
Revised 6-08

www.tycoelectronics.com

Dimensions are in inches and millimeters unless otherwise specified. Values in brackets are metric equivalents.

Dimensions are shown for reference purposes only. Specifications subject to change.

USA: 1-800-522-6752
Canada: 1-905-470-4425
Mexico: 52-55-1106-0800
C. America: 57-1-254-4444

South America: 55-11-2103-6000
Hong Kong: 852-2735-1628
Japan: 81-44-844-8013
UK: 44-208-420-8341

MTA-156 IDC Posted Connectors (Wire-to-Wire)—Closed End, Feed-Thru

Material and Finish

Housing — UL 94V-2 rated, nylon, see chart for color

Contacts — Copper alloy, post tin or .000030 [.00076] gold plated over nickel

Closed End

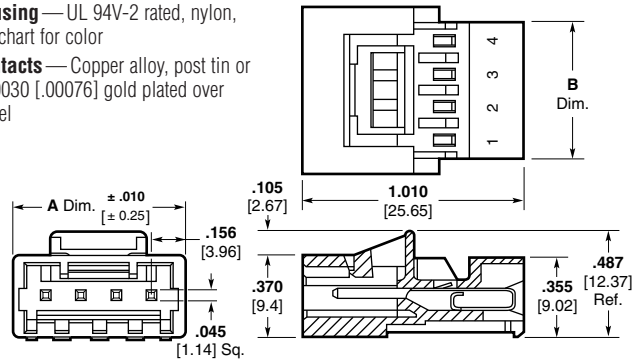

Feed-Thru

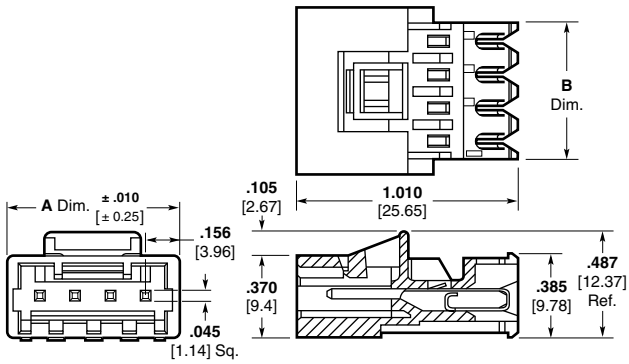

Notes:
1. Mating half visuals - pages 36 thru 39.
2. Strain relief & dust covers - pages 40 & 41.
3. Approved wire listing - page 70.

Connector Ordering Information

The "Base Part Numbers" Chart at right shows the base part number and number of circuits available for the described connectors.

Prefixes and suffixes are determined by the number of circuit positions in the connector. For example, the complete part number for a 12-position closed end connector for 18 AWG wire would be:

Base number **641435** plus
prefix-and-suffix
4- — -2

The correct ordering number is
4-641435-2

See page 15 for an explanation of RoHS lead free equivalents.

Note: All RoHS equivalent part numbers may not be available upon catalog release. If the number you need is not available, please contact Product Engineering to expedite your request.

Color Coding by Wire Size for UL 94V-2 Connectors

18 AWG — Orange
20 AWG — Yellow
22 AWG — Red
24 AWG — White
26 AWG — Blue

Performance Data

Voltage Rating — 600 VAC

Current Rating — 7 amp max.

Low-Level Resistance — 7 mΩ max. initial

Dielectric Withstanding Voltage — 1500 VAC/1 min.

Insulation Resistance — 5000 MΩ min. initial

Operating Temperature — -55° C to +105° C

Base Part Numbers

Connector Type & Wire Size	Closed End Connector[1] Part Nos.	Closed End Connector[1] RoHS Equiv.	Feed-Thru Connector[1] Part Nos.	Feed-Thru Connector[1] RoHS Equiv.
Standard UL 94V-2, Tin Plated				
18 AWG 0.8-0.9 mm²	641435	**32, 33, 34, 36, 39, 42, 45, 54**	641522	**32, 33, 34, 36, 39, 42, 45, 54**
20 AWG 0.5-0.6 mm²	641436	**32, 33, 34, 36, 39, 42, 45, 54**	641523	**32, 33, 34, 36, 39, 42, 45, 54**
22 AWG 0.3-0.4 mm²	641437	**32, 33, 34, 36, 39, 42, 45, 54**	641524	**32, 33, 34, 36, 39, 42, 45, 54**
24 AWG 0.2 mm²	641438	**32, 33, 34, 36, 39, 42, 45, 54**	641525	**32, 33, 34, 36, 39, 42, 45, 54**
26 AWG 0.12-0.15 mm²	641439	**32, 33, 34, 36, 39, 42, 45, 54**	641526	**32, 33, 34, 36, 39, 42, 45, 54**
Standard UL 94V-2, .000030 [0.00076] Gold Plated				
18 AWG 0.8-0.9 mm²	644807	**32, 33, 34, 36, 39, 42, 45, 54**	644812	**32, 33, 34, 36, 39, 42, 45, 54**
20 AWG 0.5-0.6 mm²	—[2]	—	—[2]	—
22 AWG 0.3-0.4 mm²	644809	**32, 33, 34, 36, 39, 42, 45, 54**	644814	**32, 33, 34, 36, 39, 42, 45, 54**
24 AWG 0.2 mm²	—[2]	—	—[2]	—
26 AWG 0.12-0.15 mm²	—[2]	—	—[2]	—
Standard UL 94V-2, .000015 [0.00038] Gold Plated				
18 AWG 0.8-0.9 mm²	647476	**32, 33, 34, 36, 39, 42, 45, 54**	647481	**32, 33, 34, 36, 39, 42, 45, 54**
22 AWG 0.3-0.4 mm²	643995	**32, 33, 34, 36, 39, 42, 45, 54**	647497	**32, 33, 34, 36, 39, 42, 45, 54**

[1] MTA-156 Posted Connectors (Closed End and Feed-Thru) **will Only mate** with MTA-156 connectors with locking ramp and without polarizing tabs. They **will NOT mate** with MTA-156 Quad Connectors.
[2] Parts can be made available upon request. Minimums may apply.

No. of Circuits	Dim. A	Dim. B	Suffix
2	**.468** 11.89	**.316** 8.03	-2
3	**.624** 15.85	**.472** 11.99	-3
4	**.780** 19.81	**.628** 15.95	-4
6	**1.092** 27.74	**.940** 23.88	-6

No. of Circuits	Dim. A	Dim. B	Prefix/ Suffix
9	**1.560** 39.62	**1.408** 35.76	-9
12	**2.028** 51.51	**1.876** 47.65	1- -2
15	**2.496** 63.40	**2.344** 59.54	1- -5
24	**3.900** 99.06	**3.748** 95.20	2- -4

Technical Documents

Product Specification
108-1065 MTA-156 Posted Connector

Application Specification
114-1020 MTA-156 Connectors, Posted Connectors and Card Edge Connectors

Replacement IDC Contacts

Material and Finish

Contacts — Copper alloy, post tin plated over nickel

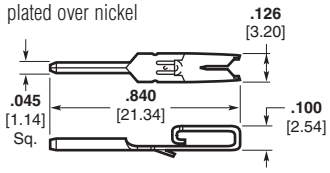

Wire Size AWG	Wire Size mm²	Part Numbers
18	0.8-0.9	3-641425-1
20	0.5-0.6	3-641426-1
22	0.3-0.4	3-641427-1
24	0.2	3-641428-1
26	0.12-0.15	3-641429-1

Catalog 82056
Revised 6-08

www.tycoelectronics.com

Dimensions are in inches and millimeters unless otherwise specified. Values in brackets are metric equivalents.

Dimensions are shown for reference purposes only. Specifications subject to change.

USA: 1-800-522-6752
Canada: 1-905-470-4425
Mexico: 52-55-1106-0800
C. America: 57-1-254-4444

South America: 55-11-2103-6000
Hong Kong: 852-2735-1628
Japan: 81-44-844-8013
UK: 44-208-420-8341

MTA-156 Flat Headers—Straight

Material and Finish

Housing — UL94V-0 rated, polyester, white

Posts — Copper alloy, tin plated, .000030 [0.00076] or .000015 [0.00038] gold over nickel

Notes:
1. Post(s) can be omitted for keying purposes. Specify the desired post(s) to be omitted using the figure to identify Post No. 1.
2. Gold headers are duplex plated, gold on mating end of post and tin on the solder tail.
3. .125 [3.18] solder tail lengths are for .062 [1.57] thick printed circuit boards and .175 [4.45] solder tail lengths are for .093-.125 [2.36-3.18] thick printed circuit boards.
4. To determine header overall length (Dim. A), multiply .156 x the number of posts. Example: .156 x 10 posts equals 1.560 inches [39.62 mm].

For mateability options, see matrix on pages 34, 35, 54 and 58.

For mating half visuals, see pages 36 thru 39, 55, 60 and 62.

Header Ordering Information

The "Base Part Numbers" Chart at right shows the base part number and number of posts available for the described headers.

Prefixes and suffixes are determined by the number of post positions in the header. For example, the complete part number for a 10-position header with square posts and a .125 [3.18] solder tail length would be:

Base number **640383** plus
prefix-and-suffix
4- — -0

The correct ordering number is
4-640383-0

The part numbers in **bold face** are the RoHS equivalent version. Example:

No. of Pos.	Lead Free RoHS Prefix/Suffix
2	3-640383–2
	thru
24	5-640383-4

See page 15 for an explanation of RoHS lead free equivalents.

Note: All RoHS equivalent part numbers may not be available upon catalog release. If the number you need is not available, please contact Product Engineering to expedite your request.

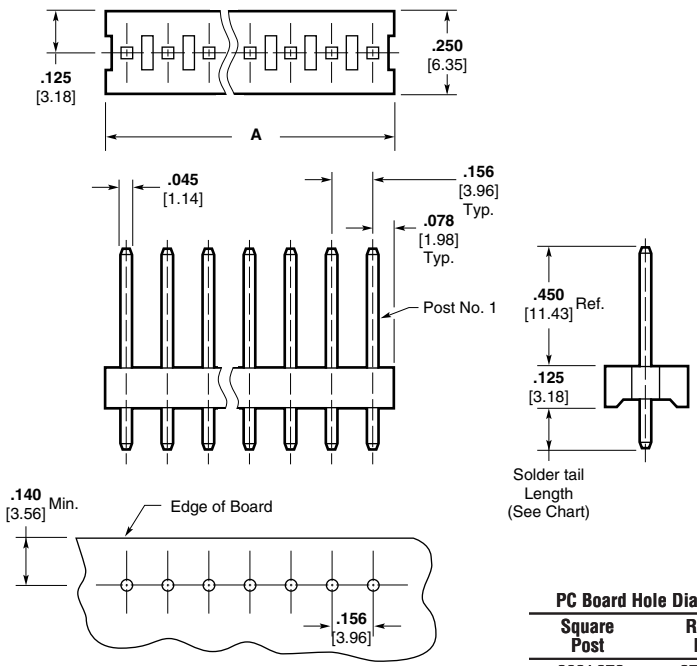

Recommended Mounting Hole Pattern for .062 [1.57] Thk. PC Board

PC Board Hole Diameters

Square Post	Round Post
.080/.070 [2.03/1.78]	.070/.060 [1.78/1.52]

Note: Consult Product Drawing for details on placing headers onto PC boards.

Base Part Numbers

Square Posts				Round Posts			
.125 [3.18] Solder tail		.175 [4.45] Solder tail		.125 [3.18] Solder tail		.175 [4.45] Solder tail	
Header Part Nos.	RoHS Equiv.	Header Part Nos.	RoHS Equiv.	Header Part Nos.	RoHS Equiv.	Header Part Nos.	RoHS Equiv.
Standard UL94V-0, Tin Plated							
640383	**2–24**	644749	**2–24**	640384	**2–24**	644750	**2–24**
Standard UL94V-0, .000030 [0.00076] Gold Plated							
641202	**32–54**	644756	**32–54**	641203	**32–54**	644757	**32–54**
Standard UL94V-0, .000015 [0.00038] Gold Plated							
641113	**32–54**	644763	**32–54**	641114	**32–54**	644764	**32–54**

Note:
Select load headers (omitted pin headers) are available upon request. Please contact product engineer or product manager for details.

Catalog 82056
Revised 6-08

www.tycoelectronics.com

Dimensions are in inches and millimeters unless otherwise specified. Values in brackets are metric equivalents.

Dimensions are shown for reference purposes only. Specifications subject to change.

USA: 1-800-522-6752
Canada: 1-905-470-4425
Mexico: 52-55-1106-0800
C. America: 57-1-254-4444

South America: 55-11-2103-6000
Hong Kong: 852-2735-1628
Japan: 81-44-844-8013
UK: 44-208-420-8341

MTA-156 Flat Headers—Right-Angle

Material and Finish

Housing — UL94V-0 rated, polyester, white

Posts — Copper alloy, tin plated, .000030 [0.00076] or .000015 [0.00038] gold over nickel

Notes:
1. Post(s) can be omitted for keying purposes. Specify the desired post(s) to be omitted using the figure to identify Post No. 1.
2. Gold headers are duplex plated, gold on mating end of post and tin on the solder tail.
3. .125 [3.18] solder tail lengths are for .062 [1.57] thick printed circuit boards and .175 [4.45] solder tail lengths are for .093-.125 [2.36-3.18] thick printed circuit boards.
4. To determine header overall length (Dim. A), multiply .156 x the number of posts. Example: .156 x 10 posts equals 1.560 inches [39.62 mm].

For mateability options, see matrix on pages 34, 35, 54 and 58.

For mating half visuals, see pages 36 thru 39, 55, 60 and 62.

Header Ordering Information

The "Base Part Numbers" Chart at right shows the base part number and number of posts available for the described headers.

Prefixes and suffixes are determined by the number of post positions in the header. For example, the complete part number for a 10-position header with square posts and a .125 [3.18] solder tail length would be:

Base number **641204** plus
prefix-and-suffix
4- — -0

The correct ordering number is
4-641204-0

The part numbers in **bold face** are the RoHS equivalent version. Example:

No. of Pos.	Lead Free RoHS Prefix/Suffix
2	3-641204–2
	thru
24	5-641204-4

See page 15 for an explanation of RoHS lead free equivalents.

Note: All RoHS equivalent part numbers may not be available upon catalog release. If the number you need is not available, please contact Product Engineering to expedite your request.

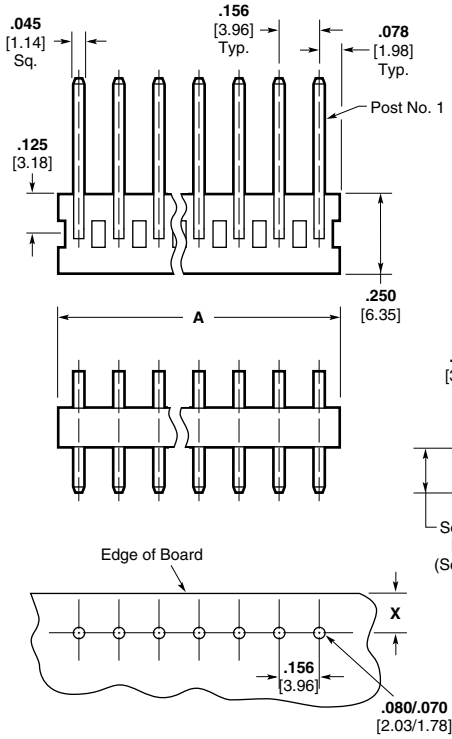

Recommended Mounting Hole Pattern for .062 [1.57] Thk. PC Board

X = .140 [3.56] Min., .430 [10.92] Max. when mated with MTA Connector.

X = .140 [3.56] Min. when mated with SL-156 Wire-to-Board Connector.

Note: Consult Product Drawing for details on placing headers onto PC boards.

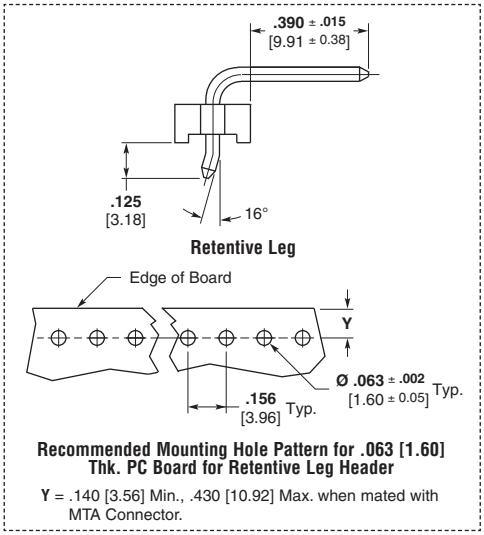

Retentive Leg

Recommended Mounting Hole Pattern for .063 [1.60] Thk. PC Board for Retentive Leg Header

Y = .140 [3.56] Min., .430 [10.92] Max. when mated with MTA Connector.

Base Part Numbers

Square Posts					
Retentive Leg		.125 [3.18] Solder tail		.175 [4.45] Solder tail	
Header Part Nos.	RoHS Equiv.	Header Part Nos.	RoHS Equiv.	Header Part Nos.	RoHS Equiv.
Standard UL94V-0, Tin Plated					
647646	**2–12**	640385	**2–24**	644751	**2–24**
Standard UL94V-0, .000030 [0.00076] Gold Plated					
—	—	641204	**32–54**	644758	**32–54**
Standard UL94V-0, .000015 [0.00038] Gold Plated					
—	—	641115	**32–54**	644765	**32–54**

Note:
Select load headers (omitted pin headers) are available upon request. Please contact product engineer or product manager for details.

Catalog 82056
Revised 6-08

www.tycoelectronics.com

Dimensions are in inches and millimeters unless otherwise specified. Values in brackets are metric equivalents.

Dimensions are shown for reference purposes only. Specifications subject to change.

USA: 1-800-522-6752
Canada: 1-905-470-4425
Mexico: 52-55-1106-0800
C. America: 57-1-254-4444

South America: 55-11-2103-6000
Hong Kong: 852-2735-1628
Japan: 81-44-844-8013
UK: 44-208-420-8341

MTA-156 Friction Lock Headers—Straight

Material and Finish

Housing — UL94V-0 rated, polyester, white

Posts — Copper alloy, tin plated, .000030 [0.00076] or .000015 [0.00038] gold over nickel

Notes:
1. Post(s) can be omitted for keying purposes. Specify the desired post(s) to be omitted using the figure to identify Post No. 1.
2. Gold headers are duplex plated, gold on mating end of post and tin on the solder tail.
3. .125 [3.18] solder tail lengths are for .062 [1.57] thick printed circuit boards and .175 [4.45] solder tail lengths are for .093-.125 [2.36-3.18] thick printed circuit boards.
4. To determine header overall length (Dim. A), multiply .156 x the number of posts. Example: .156 x 10 posts equals 1.560 inches [39.62 mm].

For mateability options, see matrix on pages 34, 35, 54 and 58.

For mating half visuals, use connectors with a locking ramp for polarization/retention purposes, see pages 36 thru 39, 55, 60 and 62.

For polarizing purposes only use connectors without a locking ramp. See pages 36 thru 39, 55, 60 and 62.

Header Ordering Information

The "Base Part Numbers" Chart at right shows the base part number and number of posts available for the described headers.

Prefixes and suffixes are determined by the number of post positions in the header. For example, the complete part number for a 10-position header with square posts and a .125 [3.18] solder tail length would be:

Base number **641208** plus prefix-and-suffix **4- — -0**

The correct ordering number is **4-641208-0**

The part numbers in **bold face** are the RoHS equivalent version. Example:

No. of Pos.	Standard Prefix/Suffix	Lead Free RoHS Prefix/Suffix
2	641208–2	3-641208–2
	thru	
24	2-641208-4	5-641208-4

See page 15 for an explanation of RoHS lead free equivalents.

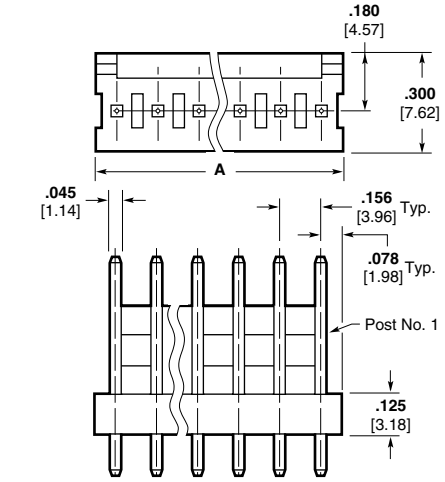

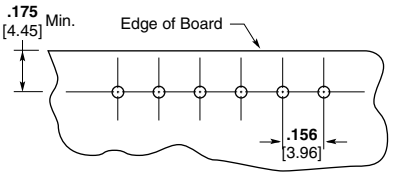

Recommended Mounting Hole Pattern for .062 [1.57] Thk. PC Board

PC Board Hole Diameters	
Square Post	Round Post
.080/.070 [2.03/1.78]	.070/.060 [1.78/1.52]

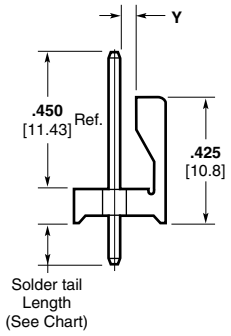

Y = .068 [1.73] Max. 2-8 position tin plated and 2–24 position gold plated headers.

Y = .073 [1.85] 9-24 position tin plated headers.

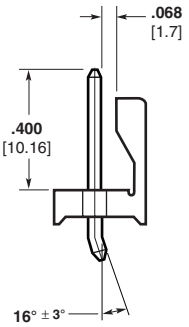

Retentive Leg

Note: Consult Product Drawing for details on placing headers onto PC boards.

Base Part Numbers

Square Posts						Round Posts			
Retentive Leg		.125 [3.18] Solder tail		.175 [4.45] Solder tail		.125 [3.18] Solder tail		.175 [4.45] Solder tail	
Header Part Nos.	RoHS Equiv.	Header Part Nos.	RoHS Equiv.	Header Part Nos.	RoHS Equiv.	Header Part Nos.	RoHS Equiv.	Header Part Nos.	RoHS Equiv.
Standard UL94V-0, Tin Plated									
1744017	**2-12**	640445	**2–24**	644752	**2–24**	640388	**2–24**	644753	**2–24**
Standard UL94V-0, .000030 [0.00076] Gold Plated									
—	—	641208	**32–54**	644759	**32–54**	641209	**32–54**	644760	**32–54**
Standard UL94V-0, .000015 [0.00038] Gold Plated									
—	—	641119	**32–54**	644766	**32–54**	641120	**32–54**	644767	**32–54**

Note: All RoHS equivalent part numbers may not be available upon catalog release. If the number you need is not available, please contact Product Engineering to expedite your request.

Note:
Select load headers (omitted pin headers) and tube loaded product are available upon request. Please contact product engineer or product manager for details.

Catalog 82056
Revised 6-08

www.tycoelectronics.com

Dimensions are in inches and millimeters unless otherwise specified. Values in brackets are metric equivalents.

Dimensions are shown for reference purposes only. Specifications subject to change.

USA: 1-800-522-6752
Canada: 1-905-470-4425
Mexico: 52-55-1106-0800
C. America: 57-1-254-4444

South America: 55-11-2103-6000
Hong Kong: 852-2735-1628
Japan: 81-44-844-8013
UK: 44-208-420-8341

MTA-156 Friction Lock Headers—Right-Angle

Material and Finish

Housing — UL94V-0 rated, polyester, white

Posts — Copper alloy, tin plated, .000030 [0.00076] or .000015 [0.00038] gold over nickel

Notes:
1. Post(s) can be omitted for keying purposes. Specify the desired post(s) to be omitted using the figure to identify Post No. 1.
2. Gold headers are duplex plated, gold on mating end of post and tin on the solder tail.
3. .125 [3.18] solder tail lengths are for .062 [1.57] thick printed circuit boards and .175 [4.45] solder tail lengths are for .093-.125 [2.36-3.18] thick printed circuit boards.
4. To determine header overall length (Dim. A), multiply .156 x the number of posts. Example: .156 x 10 posts equals 1.560 inches [39.62 mm].

For mateability options, see matrix on pages 34, 35, 54 and 58.

When using Front Bend Headers — for mating half visuals use connectors with a locking ramp for polarization/ retention purposes. When using Rear Bend Headers — for mating half visuals use connectors without a locking ramp. For polarization purposes only see pages 36 thru 39, 55, 60 and 62.

Header Ordering Information

The "Base Part Numbers" Chart at right shows the base part number and number of posts available for the described headers.

Prefixes and suffixes are determined by the number of post positions in the header. For example, the complete part number for a 10-position header with square posts, front bend, and a .125 [3.18] solder tail length would be:

Base number **641210** plus
prefix-and-suffix
4- — -0

The correct ordering number is
4-641210-0

The part numbers in **bold face** are the RoHS equivalent version. Example:

No. of Pos.	Standard Prefix/Suffix	Lead Free RoHS Prefix/Suffix
2	641210–2	3-641210–2
	thru	
24	2-641210-4	5-641210-4

See page 15 for an explanation of RoHS lead free equivalents.

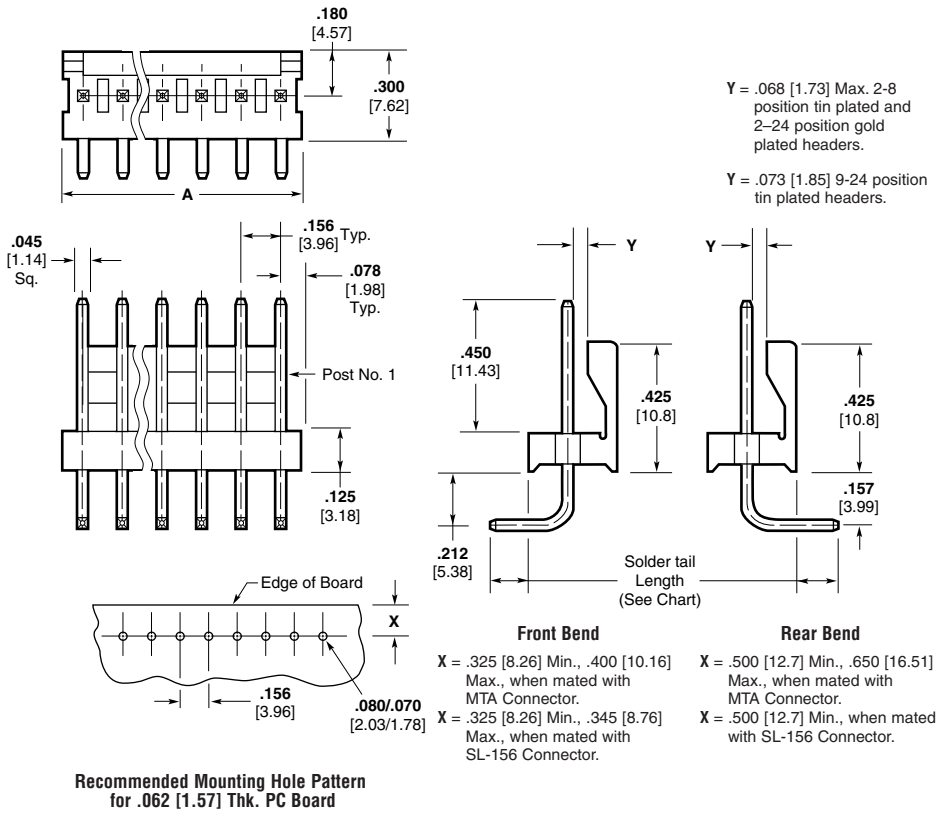

Recommended Mounting Hole Pattern for .062 [1.57] Thk. PC Board

Note: Consult Product Drawing for details on placing headers onto PC boards.

Base Part Numbers

Square Posts

Front Bend				Rear Bend			
.125 [3.18] Solder tail		.175 [4.45] Solder tail		.125 [3.18] Solder tail		.175 [4.45] Solder tail	
Header Part Nos.	RoHS Equiv.	Header Part Nos.	RoHS Equiv.	Header Part Nos.	RoHS Equiv.	Header Part Nos.	RoHS Equiv.
Standard UL94V-0, Tin Plated							
640389	**2–24**	644754	**2–24**	640387	**2–24**	644755	**2–24**
Standard UL94V-0, .000030 [0.00076] Gold Plated							
641210	**32–54**	644761	**32–54**	641207	**32–54**	644762	**32–54**
Standard UL94V-0, .000015 [0.00038] Gold Plated							
641121	**32–54**	644768	**32–54**	641118	**32–54**	644769	**32–54**

Note: All RoHS equivalent part numbers may not be available upon catalog release. If the number you need is not available, please contact Product Engineering to expedite your request.

Note:
Select load headers (omitted pin headers) are available upon request. Please contact product engineer or product manager for details.

Catalog 82056
Revised 6-08

www.tycoelectronics.com

Dimensions are in inches and millimeters unless otherwise specified. Values in brackets are metric equivalents.

Dimensions are shown for reference purposes only. Specifications subject to change.

USA: 1-800-522-6752
Canada: 1-905-470-4425
Mexico: 52-55-1106-0800
C. America: 57-1-254-4444

South America: 55-11-2103-6000
Hong Kong: 852-2735-1628
Japan: 81-44-844-8013
UK: 44-208-420-8341

MTA-156 Polarized Lock Headers—Straight

Material and Finish

Housing — UL94V-0 rated, polyester, white

Posts — Copper alloy, tin plated or .000030 [0.00076] gold over nickel

Notes:
1. Post(s) can be omitted for keying purposes. Specify the desired post(s) to be omitted using the figure to identify Post No. 1.
2. Peg holes are not required in PC Boards when headers without pegs are used.
3. One peg only on a 2 position header, other position sizes have two pegs.
4. Headers with .00015 [0.00038] gold plated post are available upon request. Minimums may apply.
5. To determine header overall length (Dim. A), multiply .156 x the number of posts. Example: .156 x 10 posts equals 1.560 inches [39.62 mm].

For mateability options, see matrix on pages 34, 35, 54 and 58.

For mating half visuals, use connectors with a locking ramp for polarization/retention purposes, see pages 36 thru 39, 55, 60 and 62.

For polarizing purposes only use connectors without a locking ramp. See pages 36 thru 39, 60 and 62.

Header Ordering Information

The "Base Part Numbers" Chart at right shows the base part number and number of posts available for the described headers.

Prefixes and suffixes are determined by the number of post positions in the header. For example, the complete part number for a 10-position header with square posts with pegs would be:

Base number **644615** plus

prefix-and-suffix
4- — -0

The correct ordering number is
4-644615-0

The part numbers in **bold face** are the RoHS equivalent version. Example:

No. of Pos.	Lead Free RoHS Prefix/Suffix
2	3-644615–2
	thru
18	4-644615-8

See page 15 for an explanation of RoHS lead free equivalents.

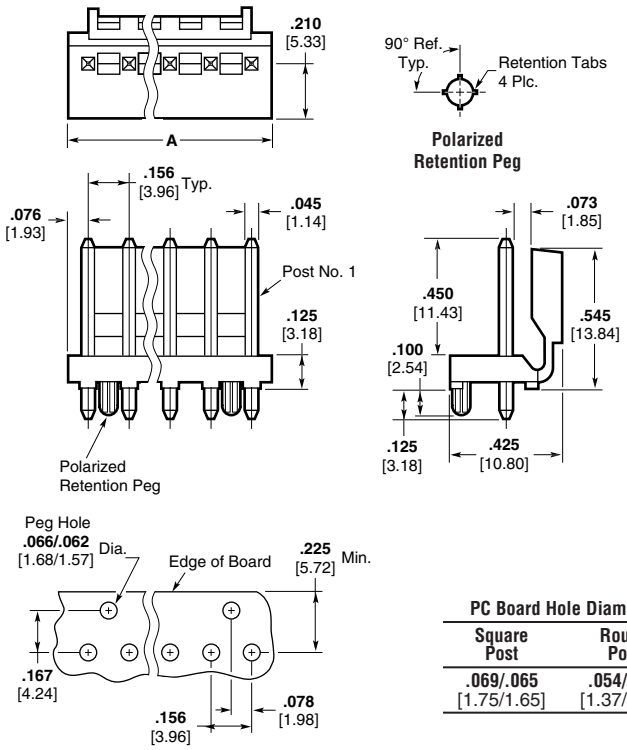

Recommended Mounting Hole Pattern for .062 [1.57] Thk. PC Board

PC Board Hole Diameters

Square Post	Round Post
.069/.065 [1.75/1.65]	.054/.050 [1.37/1.27]

Note: Consult Product Drawing for details on placing headers onto PC boards.

Base Part Numbers

Square Posts				Round Posts			
Without Pegs		With Pegs		Without Pegs		With Pegs	
Header Part Nos.	RoHS Equiv.	Header Part Nos.	RoHS Equiv.	Header Part Nos.	RoHS Equiv.	Header Part Nos.	RoHS Equiv.
Standard UL94V-0, Tin Plated							
644611	**32–48**	644615	**32–48**	644612	**32–48**	644616	**32–48**
Standard UL94V-0, .000030 [0.00076] Gold Plated							
644627	**32–48**	644631	**32–48**	644628	**32–48**	644632	**32–48**

Note: All RoHS equivalent part numbers may not be available upon catalog release. If the number you need is not available, please contact Product Engineering to expedite your request.

Note:
Select load headers (omitted pin headers) are available upon request. Please contact product engineer or product manager for details.

Catalog 82056
Revised 6-08

www.tycoelectronics.com

Dimensions are in inches and millimeters unless otherwise specified. Values in brackets are metric equivalents.

Dimensions are shown for reference purposes only. Specifications subject to change.

USA: 1-800-522-6752
Canada: 1-905-470-4425
Mexico: 52-55-1106-0800
C. America: 57-1-254-4444

South America: 55-11-2103-6000
Hong Kong: 852-2735-1628
Japan: 81-44-844-8013
UK: 44-208-420-8341

MTA-156 Polarized Lock Headers—Right-Angle

Material and Finish

Housing — UL94V-0 rated, polyester, white

Posts — Copper alloy, tin plated or .000030 [0.00076] gold over nickel

Notes:
1. Post(s) can be omitted for keying purposes. Specify the desired post(s) to be omitted using the figure to identify Post No. 1.
2. Peg holes are not required in PC Boards when headers without pegs are used.
3. One peg only on a 2 position header, other position sizes have two pegs.
4. Headers with .00015 [0.00038] gold plated post are available upon request. Minimums may apply.
5. To determine header overall length (Dim. A), multiply .156 x the number of posts. Example: .156 x 10 posts equals 1.560 inches [39.62 mm].

For mateability options, see matrix on pages 34, 35, 54 and 58.

For mating half visuals, use only connectors with a locking ramp for polarization/retention purposes, see pages 36 thru 39, 55, 60 and 62.

For polarizing purposes only use connectors without a locking ramp. See pages 36 thru 39, 60 and 62.

Header Ordering Information

The "Base Part Numbers" Chart at right shows the base part number and number of posts available for the described headers.

Prefixes and suffixes are determined by the number of post positions in the header. For example, the complete part number for a 10-position header with front bend and with pegs would be:

Base number **644617** plus
prefix-and-suffix
4- — -0

The correct ordering number is
4-644617-0

The part numbers in **bold face** are the RoHS equivalent version. Example:

No. of Pos.	Lead Free RoHS Prefix/Suffix
2	3-644617–2
	thru
18	4-644617-8

See page 15 for an explanation of RoHS lead free equivalents.

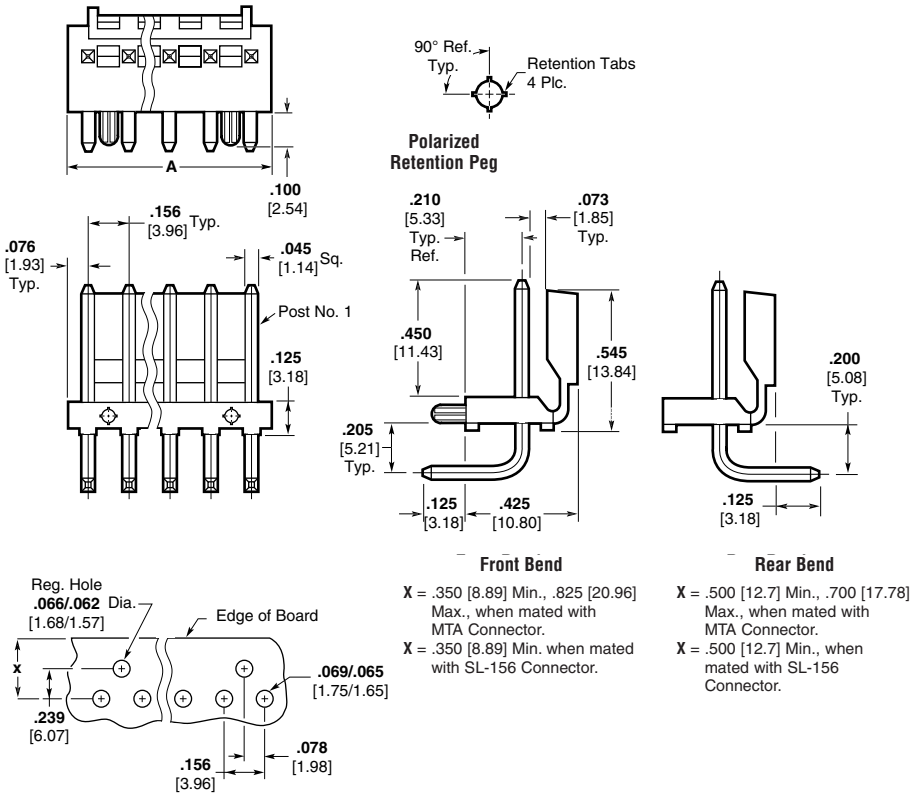

Recommended Mounting Hole Pattern for .062 [1.57] Thk. PC Board

Note: Consult Product Drawing for details on placing headers onto PC boards.

Base Part Numbers

Square Posts					
Front Bend				Rear Bend	
Without Pegs		With Pegs		Without Pegs	
Header Part Nos.	RoHS Equiv.	Header Part Nos.	RoHS Equiv.	Header Part Nos.	RoHS Equiv.
Standard UL94V-0, Tin Plated					
644613	**32–48**	644617	**32–48**	644614	**32–48**
Standard UL94V-0, .000030 [0.00076] Gold Plated					
644629	**32–48**	644633	**32–48**	644630	**32–48**

Note: All RoHS equivalent part numbers may not be available upon catalog release. If the number you need is not available, please contact Product Engineering to expedite your request.

Note:
Select load headers (omitted pin headers) are available upon request. Please contact product engineer or product manager for details.

Catalog 82056
Revised 6-08

www.tycoelectronics.com

Dimensions are in inches and millimeters unless otherwise specified. Values in brackets are metric equivalents.

Dimensions are shown for reference purposes only. Specifications subject to change.

USA: 1-800-522-6752
Canada: 1-905-470-4425
Mexico: 52-55-1106-0800
C. America: 57-1-254-4444

South America: 55-11-2103-6000
Hong Kong: 852-2735-1628
Japan: 81-44-844-8013
UK: 44-208-420-8341

MTA-156 Friction Lock High Temperature Headers—Straight

Material and Finish

Housing — UL94V-0 rated, nylon, black

Posts — Copper alloy, tin plated, .000015 [0.00038] gold over nickel

Temperature — Maximum Temperature Rating: 280°C

Notes:
1. Post(s) can be omitted for keying purposes. Specify the desired post(s) to be omitted using the figure to identify Post No. 1.
2. Gold headers are duplex plated, gold on mating end of post and tin-lead on the solder tail.
3. Headers with straight and right-angle square posts are available upon request. Minimums may apply.
4. To determine header overall length (Dim. A), multiply .156 x the number of posts. Example: .156 x 10 posts equals 1.560 inches [39.62 mm].

For mateability options, see matrix on pages 34, 35, 54 and 58.

For mating half visuals, use connectors with a locking ramp for polarization/retention purposes, see pages 36 thru 39, 55, 60 and 62.

For polarizing purposes only use connectors without a locking ramp. See pages 36 thru 39, 60 and 62.

Header Ordering Information

The "Base Part Numbers" Chart at right shows the base part number and number of posts available for the described headers.

Prefixes and suffixes are determined by the number of post positions in the header. For example, the complete part number for a 10-position header with round tin plated posts:

Base number **647648** plus
prefix-and-suffix
4- — -0

The correct ordering number is
4-647648-0

The part numbers in **bold face** are the RoHS equivalent version. Example:

No. of Pos.	Lead Free RoHS Prefix/Suffix
2	3-647648–2
12	4-647648-2

See page 15 for an explanation of RoHS lead free equivalents.

Note: All RoHS equivalent part numbers may not be available upon catalog release. If the number you need is not available, please contact Product Engineering to expedite your request.

For use with Infrared Reflow Process

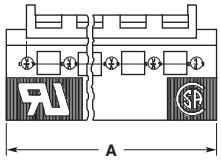

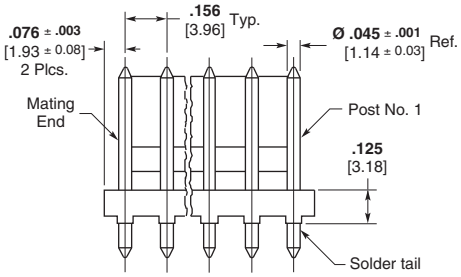

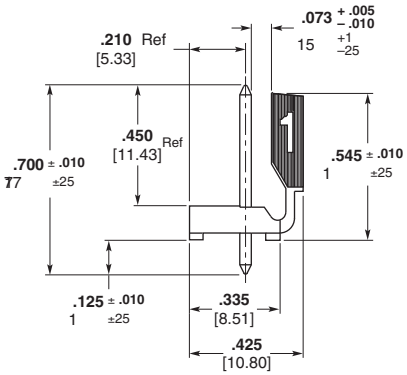

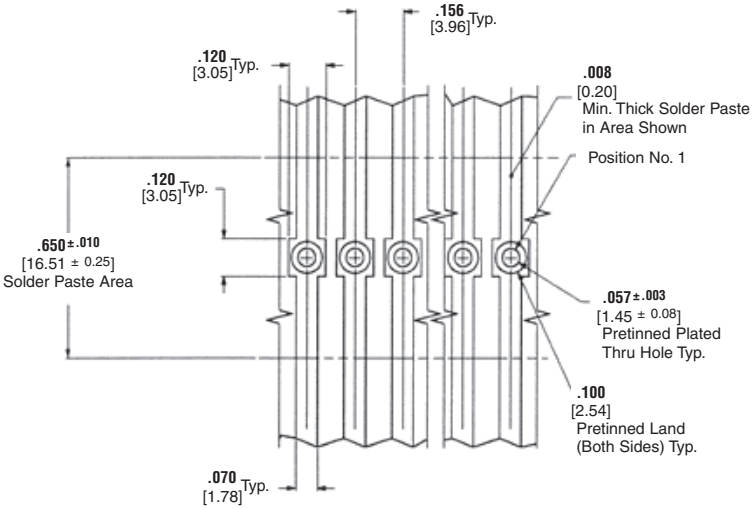

Recommended Mounting Hole Pattern for .062 [1.57] Thick PC Board

Note: Consult Product Drawing for details on placing headers onto PC boards.

Base Part Numbers

Round Post	
Header Part Nos.	**RoHS Equiv.**
Standard UL94V-0, Tin Plated	
647648	**32–42**
Standard UL94V-0, .000015 [0.00038] Gold Plated	
647649	**32–42**

Note:
Select load headers (omitted pin headers) are available upon request. Please contact product engineer or product manager for details.

Catalog 82056
Revised 6-08

www.tycoelectronics.com

Dimensions are in inches and millimeters unless otherwise specified. Values in brackets are metric equivalents.

Dimensions are shown for reference purposes only. Specifications subject to change.

USA: 1-800-522-6752
Canada: 1-905-470-4425
Mexico: 52-55-1106-0800
C. America: 57-1-254-4444

South America: 55-11-2103-6000
Hong Kong: 852-2735-1628
Japan: 81-44-844-8013
UK: 44-208-420-8341

MTA-156 Shrouded Headers—Straight and Right-Angle

Material and Finish

Housing — UL94V-0 rated, polyester, black

Posts — Copper alloy, tin plated; or .000030 [0.00076] or .000015 [0.00038] gold over nickel

Notes:

1. Post(s) can be omitted for keying purposes. Specify the desired post(s) to be omitted using the figure to identify Post No. 1.
2. Gold headers are duplex plated, gold on mating end of post and tin on the solder tail.
3. Peg holes are not required in PC boards when headers without pegs are used.
4. One peg only on a 2 position header, other position sizes have two pegs.
5. Right-angle front and rear bend headers with retention pegs can be made available upon request. Minimums may apply.

For mateability options, see matrix on pages 34, 35, 54 and 58.

For mating half visuals, see pages 36 thru 39 and 55.

Header Ordering Information

The "Base Part Numbers" Chart at right shows the base part number and number of posts available for the described headers.

Prefixes and suffixes are determined by the number of post positions in the header. For example, the complete part number for a 10-position header with straight, square posts and with pegs would be:

Base number **647127** plus prefix-and-suffix **4- — -0**

The correct ordering number is **4-647127-0**

No. of Pos.	Dim. A	RoHS Prefix/ Suffix
2	**.406** 10.31	2--2
3	**.562** 14.27	2--3
4	**.718** 18.24	2--4
5	**.874** 22.20	2--5
6	**1.030** 26.16	2--6
7	**1.186** 30.12	2--7
8	**1.342** 34.09	2--8
9	**1.498** 38.05	2--9
10	**1.654** 42.01	3--0
11	**1.810** 45.97	3--1
12	**1.966** 49.94	3--2

Note: All RoHS equivalent part numbers may not be available upon catalog release. If the number you need is not available, please contact Product Engineering to expedite your request.

Straight Post (.045 [1.14] Square or Round)

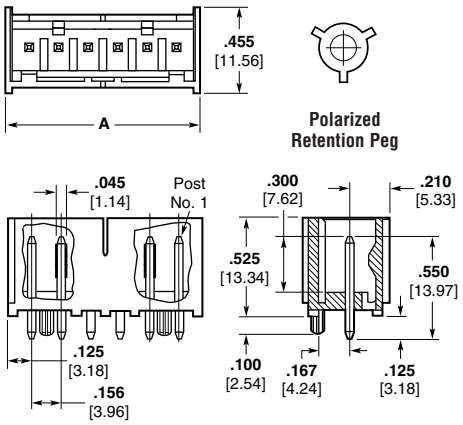

Right-Angle (.045 [1.14] Square)

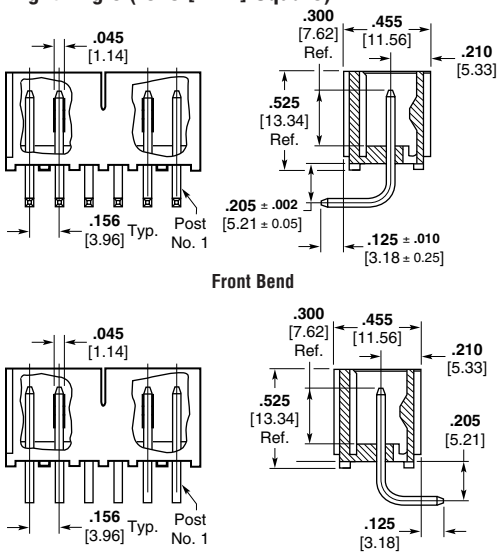

PC Board Hole Diameters

Square Post	Round Post
.069/.065 [1.75/1.65]	**.054/.050** [1.37/1.27]

Note: Consult Product Drawing for details on placing headers onto PC boards.

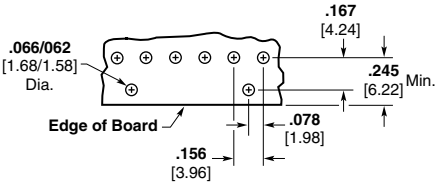

Recommended Mounting Hole Pattern for .062 [1.57] Thick PC Board Using a Straight Post Header

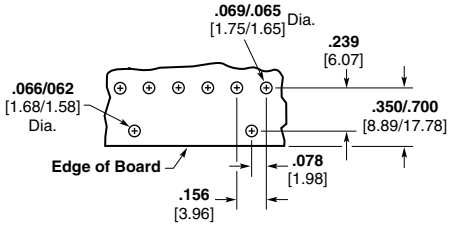

Recommended Mounting Hole Pattern for .062 [1.57] Thick PC Board Using a Right-Angle Header

Base Part Numbers

Straight Square Posts				Straight Round Posts			
Without Pegs		With Pegs		Without Pegs		With Pegs	
Header Part Nos.	RoHS Equiv.	Header Part Nos.	RoHS Equiv.	Header Part Nos.	RoHS Equiv.	Header Part Nos.	RoHS Equiv.
Standard UL94V-0, Tin Plated							
647123	**22–32**	647127	**22–32**	647124	**22–32**	647128	**22–32**
Standard UL94V-0, .000030 [0.00076] Gold Plated							
647131	**22–32**	647135	**22–32**	647132	**22–32**	647136	**22–32**
Standard UL94V-0, .000015 [0.00038] Gold Plated							
647139	**22–32**	647143	**22–32**	647140	**22–32**	647144	**22–32**

Square Posts			
Right-Angle Posts, Front Bend Without Pegs		Right-Angle Posts, Rear Bend Without Pegs	
Header Part Nos.	RoHS Equiv.	Header Part Nos.	RoHS Equiv.
Standard UL94V-0, Tin Plated			
647125	**22–32**	647126	**22–32**
Standard UL94V-0, .000030 [0.00076] Gold Plated			
647133	**22–32**	647134	**22–32**
Standard UL94V-0, .000015 [0.00038] Gold Plated			
647141	**22–32**	647142	**22–32**

Note: Select load headers (omitted pin headers) are available upon request. Please contact product engineer or product manager for details.

Catalog 82056
Revised 6-08

www.tycoelectronics.com

Dimensions are in inches and millimeters unless otherwise specified. Values in brackets are metric equivalents.

Dimensions are shown for reference purposes only. Specifications subject to change.

USA: 1-800-522-6752
Canada: 1-905-470-4425
Mexico: 52-55-1106-0800
C. America: 57-1-254-4444

South America: 55-11-2103-6000
Hong Kong: 852-2735-1628
Japan: 81-44-844-8013
UK: 44-208-420-8341

MTA-156 IDC Quad Connectors

Product Facts

- **Provides four points of contact**
- **Greater current carrying capability than Standard MTA-156 Connectors**
- **Connector styles include both closed end and feed-thru with locking ramp, with and without polarizing tabs in 2 through 12 positions**
- **Available for wire ranges of 18–22 AWG [0.9–0.3 mm²]**
- **Contacts are lubricated for fretting corrosion protection**
- **Complies with Tyco Electronics Quality Specification 102-6, "Preparation of Design Objectives"**
- **Uses existing MTA application tooling for termination**
- **Quad connectors preloaded with contacts**
- **All contacts are slotted for insulation displacement (IDC) termination technique**
- **Connectors and headers are end-to-end stackable**
- **AWG size is "frosted" on the side of the connector**
- **Recognized under the Component Program of Underwriters Laboratories Inc., File No. E28476**
- **Certified by Canadian Standards Association, File No. LR 7189**
- **Satisfies the VDE requirements according to VDE 110, Insulation Group B, 250 vac for air and creepage paths**

The MTA-156 Quad Connector provides a connection with four points of contact. The UL94V-0 rated connector with multi-point contacts provides greater current carrying capability than the Standard MTA-156 Connector. These connectors comply with Tyco Electronics Quality Specification 102-6* and satisfy the VDE requirements according to VDE 110.

The connectors are available for wire ranges of 18–22 AWG [0.9–0.3 mm²] and in a variety of styles including closed end and feed-thru with locking ramp, with and without polarizing tabs.

Only one wire to be terminated into an IDC contact slot.

*The 102-6 Quality Specification is the new procedure for "Preparation of Design Objectives". Its purpose is to provide a means for verifying the maximum current carrying capacity of the device.

Note: Refer to pages 70 through 74 for approved wire listings.

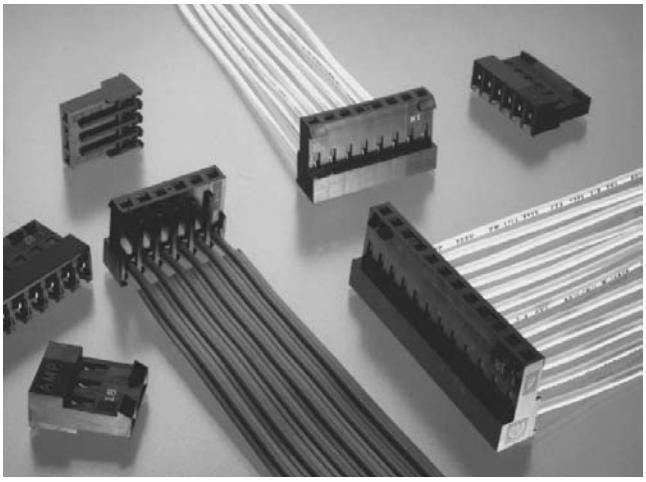

The MTA-156 Quad Connectors only mate with standard MTA-156 square post headers and use existing MTA application tooling for termination.

Performance Data

Voltage Rating — 600 vac

Current Rating — 12.5 amp max. on a single circuit.

For Multiple Circuit Loading — refer to Product Specification for current rating chart.

Low-Level Resistance — 3.0 mΩ max. initial

Dielectric Withstanding Voltage — 1500 vac/1 min.

Insulation Resistance — 5000 MΩ min. initial

Operating Temperature — -55° C to +105° C

Technical Documents

Product Specifications
108-1219 MTA-156 Quad Connector System

Application Specifications
114-1048 MTA-156 Quad Connector

This matrix has been prepared to assist you, our customer, in defining the correct mating halves for the MTA-156 header and connector combination. Where a "Y" is indicated the combination is a valid mating pair.

Headers

Connectors	640383	640385	640389	640445	644611	644613	644615	644617	644749	644751	644752	644754	647123	647125	647126	647127
644329	Y	Y	Y	Y	Y	Y	Y	Y	Y	Y	Y	Y	Y	Y	Y	Y
644370	Y	Y	Y	Y	Y	Y	Y	Y	Y	Y	Y	Y	Y	Y	Y	Y
644371	Y	Y	Y	Y	Y	Y	Y	Y	Y	Y	Y	Y	Y	Y	Y	Y
644375	Y	Y	Y	Y	Y	Y	Y	Y	Y	Y	Y	Y	Y	Y	Y	Y
644376	Y	Y	Y	Y	Y	Y	Y	Y	Y	Y	Y	Y	Y	Y	Y	Y
644377	Y	Y	Y	Y	Y	Y	Y	Y	Y	Y	Y	Y	Y	Y	Y	Y
644381	Y	Y	Y	Y	Y	Y	Y	Y	Y	Y	Y	Y	Y	Y	Y	Y
644382	Y	Y	Y	Y	Y	Y	Y	Y	Y	Y	Y	Y	Y	Y	Y	Y
644383	Y	Y	Y	Y	Y	Y	Y	Y	Y	Y	Y	Y	Y	Y	Y	Y
644387	Y	Y	Y	Y	Y	Y	Y	Y	Y	Y	Y	Y	Y	Y	Y	Y
644388	Y	Y	Y	Y	Y	Y	Y	Y	Y	Y	Y	Y	Y	Y	Y	Y
644389	Y	Y	Y	Y	Y	Y	Y	Y	Y	Y	Y	Y	Y	Y	Y	Y

Catalog 82056
Revised 6-08

www.tycoelectronics.com

Dimensions are in inches and millimeters unless otherwise specified. Values in brackets are metric equivalents.

Dimensions are shown for reference purposes only. Specifications subject to change.

USA: 1-800-522-6752
Canada: 1-905-470-4425
Mexico: 52-55-1106-0800
C. America: 57-1-254-4444

South America: 55-11-2103-6000
Hong Kong: 852-2735-1628
Japan: 81-44-844-8013
UK: 44-208-420-8341

MTA-156 IDC Quad Connectors—Closed End and Feed-Thru

Closed End with Locking Ramp

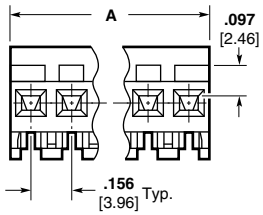

Feed-Thru with Locking Ramp

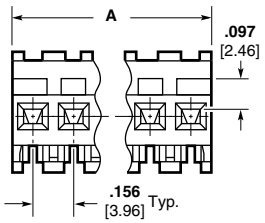

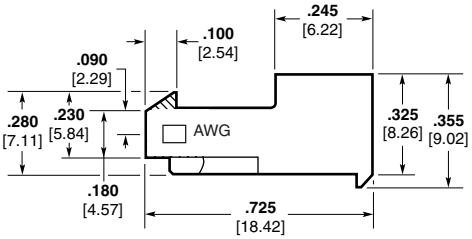

without Polarizing Tabs

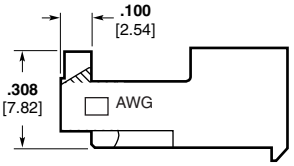

with Polarizing Tabs

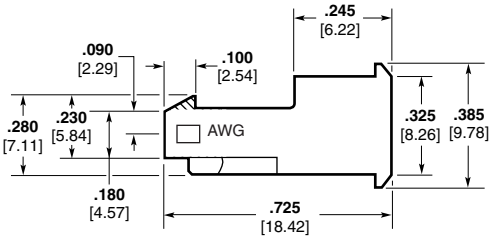

without Polarizing Tabs

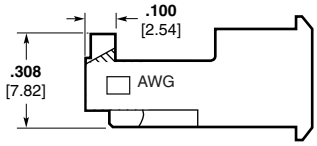

with Polarizing Tabs

Material and Finish

Housing — UL94V-0 rated, nylon, black

Contacts — High conductivity copper alloy, post tin plated

For mateability options, see matrix on page 54.

For strain relief and dust covers, see pages 40 and 41.

For mating half visuals, see pages 46 thru 48 and 50, 52 and 53, (49 and 51 Front Bend Headers only). **Mates with tin-plated** square **posts only.**

Refer to pages 70 thru 74 for approved wire listing.

Note: To determine connector overall length (Dim. A), multiply .156 x the number of circuits. Example: .156 x 10 circuits equals 1.560 inches [39.62 mm].

Base Part Numbers

Connector Type & Wire Size	Closed End with Locking Ramp				Feed-Thru with Locking Ramp			
	Without Tabs		With Tabs		Without Tabs		With Tabs	
	Connector Part Nos.	RoHS Equiv.	Connector Part Nos.	RoHS Equiv.	Connector Part Nos.	RoHS Equiv.	Connector Part Nos.	RoHS Equiv.
Standard UL94V-0, Tin Plated								
18 AWG 0.8-0.9 mm²	644329	**32–42**	644381	**32–42**	644375	**32–42**	644387	**32–42**
20 AWG 0.5-0.6 mm²	644370	**32–42**	644382	**32–42**	644376	**32–42**	644388	**32–42**
22 AWG 0.3-0.4 mm²	644371	**32–42**	644383	**32–42**	644377	**32–42**	644389	**32–42**

Connector Ordering Information

The "Base Part Numbers" Chart above shows the base part number and number of circuits available for the described connectors.

Prefixes and suffixes are determined by the number of circuit positions in the connector. For example, the complete part number for a 10-position closed end connector with locking ramp and without polarizing tabs for 18 AWG wire would be:

Base number **644329** plus
prefix-and-suffix
1- — -0

The correct ordering number is
1-644329-0

The set of numbers in **bold face** are the RoHS equivalent version of the standard product. Example:

No. of Pos.	Standard Prefix/Suffix	Lead Free RoHS Prefix/Suffix
2	644329–2	3-644329–2
	thru	
12	1-644329-2	4-644329-2

See page 15 for an explanation of RoHS lead free equivalents.

Note: All RoHS equivalent part numbers may not be available upon catalog release. If the number you need is not available, please contact Product Engineering to expedite your request.

Replacement IDC Contacts

Material and Finish

Contacts — High conductivity copper alloy post tin plated

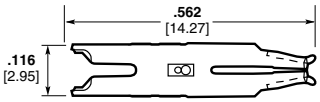

Wire Size		Part Numbers
AWG	mm²	
18	0.8-0.9	3-644508-1
20	0.5-0.6	3-644509-1
22	0.3-0.4	3-644510-1

Note: Tyco Electronics does not recommend terminating an MTA contact more than one time. Use replacement contacts when required for field repairs or wire gage changes.

Catalog 82056
Revised 6-08

www.tycoelectronics.com

Dimensions are in inches and millimeters unless otherwise specified. Values in brackets are metric equivalents.

Dimensions are shown for reference purposes only. Specifications subject to change.

USA: 1-800-522-6752
Canada: 1-905-470-4425
Mexico: 52-55-1106-0800
C. America: 57-1-254-4444

South America: 55-11-2103-6000
Hong Kong: 852-2735-1628
Japan: 81-44-844-8013
UK: 44-208-420-8341

MTA-156 IDC Card Edge Connectors—Closed End and Feed-Thru

Material and Finish

Housing — UL94V-0 rated, polyester, see chart for color

Contacts — Phosphor bronze, post tin plated

Note: Refer to pages 70 thru 74 for approved wire listings.

Color Coding by Wire Size for UL94V-0 Connectors

26 AWG — Blue
24 AWG — White
22 AWG — Red
20 AWG — Yellow
18 AWG — Orange

Connector Ordering Information

The "Base Part Numbers" Chart at right shows the base part number and number of circuits available for the described connectors.

Prefixes and suffixes are determined by the number of circuit positions in the connector. For example, the complete part number for a 12-position closed end connector without mounting ears for 18 AWG wire would be:

Base number **640859** plus prefix-and-suffix
1- — -2

The correct ordering number is

1-640859-2

See page 15 for an explanation of RoHS lead free equivalents.

Performance Data

Voltage Rating — 600 vac

Current Rating — 5 amp max.

Low-Level Resistance — 7 mΩ max. initial

Dielectric Withstanding Voltage — 1250 vac/1 min.

Insulation Resistance — 5000 MΩ min. initial

Operating Temperature — −55° C to +105° C

Technical Documents

Product Specification
108-1058 MTA-156 Card Edge Connectors

Application Specification
114-1020 MTA-156 Connectors, Posted Connectors and Card Edge Connectors

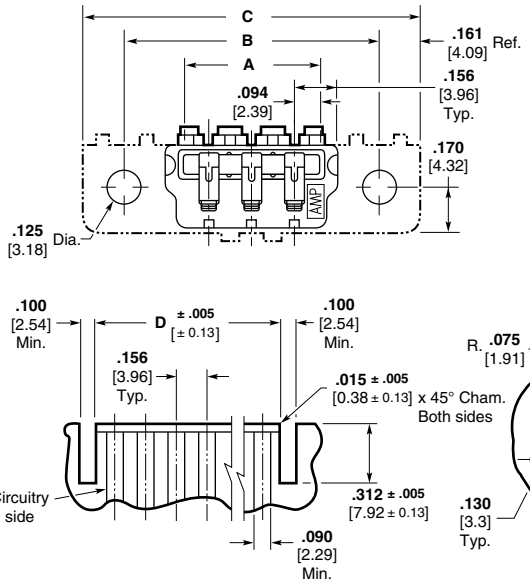

Recommended PC Board Layout for .062 [1.57] Thk. PC Board

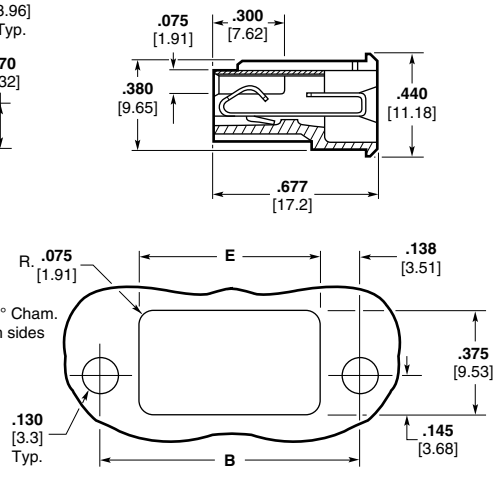

Recommended Panel Cutout

Base Part Numbers

Connector Type & Wire Size	Closed End				Feed-Thru			
	Without Mounting Ears		With Mounting Ears		Without Mounting Ears		With Mounting Ears	
	Connector Part Nos.	No. of Circuits/ RoHS Equiv.	Connector Part Nos.	No. of Circuits/ RoHS Equiv.	Connector Part Nos.	No. of Circuits/ RoHS Equiv.	Connector Part Nos.	No. of Circuits/ RoHS Equiv.
Standard UL94V-0, Tin Plated								
18 AWG 0.8-0.9 mm²	640859	3, 6, 9, 12, 15,18, 20-24 **33, 36, 39, 42, 45, 48, 50-54**	640864	3, 6, 9, 12, 15,18, 20-24 **33, 36, 39, 42, 45, 48, 50-54**	641283	3, 6, 9, 12, 15,18, 20-24 **33, 36, 39, 42, 45, 48, 50-54**	641288	3, 6, 9, 12, 15,18, 20-24 **33, 36, 39, 42, 45, 48, 50-54**
20 AWG 0.5-0.6 mm²	640860	3, 6, 9, 12, 15,18, 20-24 **33, 36, 39, 42, 45, 48, 50-54**	640865	3, 6, 9, 12, 15,18, 20-24 **33, 36, 39, 42, 45, 48, 50-54**	641284	3, 6, 9, 12, 15,18, 20-24 **33, 36, 39, 42, 45, 48, 50-54**	641289	3, 6, 9, 12, 15,18, 20-24 **33, 36, 39, 42, 45, 48, 50-54**
22 AWG 0.3-0.4 mm²	640861	3, 6, 9, 12, 15,18, 20-24 **33, 36, 39, 42, 45, 48, 50-54**	640866	3, 6, 9, 12, 15,18, 20-24 **33, 36, 39, 42, 45, 48, 50-54**	641285	3, 6, 9, 12, 15,18, 20-24 **33, 36, 39, 42, 45, 48, 50-54**	641290	3, 6, 9, 12, 15,18, 20-24 **33, 36, 39, 42, 45, 48, 50-54**
24 AWG 0.2 mm²	640862	3, 6, 9, 12, 15,18, 20-24 **33, 36, 39, 42, 45, 48, 50-54**	640867	3, 6, 9, 12, 15,18, 20-24 **33, 36, 39, 42, 45, 48, 50-54**	641286	3, 6, 9, 12, 15,18, 20-24 **33, 36, 39, 42, 45, 48, 50-54**	641291	3, 6, 9, 12, 15,18, 20-24 **33, 36, 39, 42, 45, 48, 50-54**
26 AWG 0.12-0.15 mm²	640863	3, 6, 9, 12, 15,18, 20-24 **33, 36, 39, 42, 45, 48, 50-54**	640868	3, 6, 9, 12, 15,18, 20-24 **33, 36, 39, 42, 45, 48, 50-54**	641287	3, 6, 9, 12, 15,18, 20-24 **33, 36, 39, 42, 45, 48, 50-54**	641292	3, 6, 9, 12, 15,18, 20-24 **33, 36, 39, 42, 45, 48, 50-54**

No. of Circuits	Dimensions					Prefix/ Suffix
	A	B	C	D	E	
3	**.500** [12.70]	**.926** [23.52]	**1.248** [31.70]	**.484** [12.29]	**.650** [16.51]	-3
6	**.968** [24.59]	**1.394** [35.41]	**1.716** [43.59]	**.952** [24.18]	**1.118** [28.40]	-6
9	**1.436** [36.47]	**1.862** [47.29]	**2.184** [55.47]	**1.420** [36.07]	**1.586** [40.28]	-9
12	**1.904** [48.36]	**2.330** [59.18]	**2.652** [67.36]	**1.888** [47.96]	**2.054** [52.17]	1- -2
15	**2.372** [60.25]	**2.798** [71.07]	**3.120** [79.25]	**2.356** [59.84]	**2.522** [64.06]	1- -5
18	**2.840** [72.14]	**3.266** [82.96]	**3.588** [91.14]	**2.824** [71.73]	**2.990** [75.95]	1- -8
20	**3.152** [80.06]	**3.578** [90.88]	**3.900** [99.06]	**3.136** [79.65]	**3.302** [83.87]	2- -0
21	**3.308** [84.02]	**3.734** [94.84]	**4.056** [103.02]	**3.292** [83.62]	**3.458** [87.83]	2- -1
22	**3.464** [87.99]	**3.890** [98.81]	**4.212** [106.98]	**3.448** [87.58]	**3.614** [91.80]	2- -2
23	**3.620** [91.95]	**4.046** [102.77]	**4.368** [110.95]	**3.604** [91.54]	**3.770** [95.76]	2- -3
24	**3.776** [95.91]	**4.202** [106.73]	**4.524** [114.91]	**3.760** [95.50]	**3.926** [99.72]	2- -4

Catalog 82056
Revised 6-08

www.tycoelectronics.com

Dimensions are in inches and millimeters unless otherwise specified. Values in brackets are metric equivalents.

Dimensions are shown for reference purposes only. Specifications subject to change.

USA: 1-800-522-6752
Canada: 1-905-470-4425
Mexico: 52-55-1106-0800
C. America: 57-1-254-4444

South America: 55-11-2103-6000
Hong Kong: 852-2735-1628
Japan: 81-44-844-8013
UK: 44-208-420-8341

MTA-156 IDC Card Edge Accessories

Dust Cover

Material (RoHS Compliant)

UL94V-0 rated, polyester, white

Cover is for both Closed End and Feed-Thru connectors

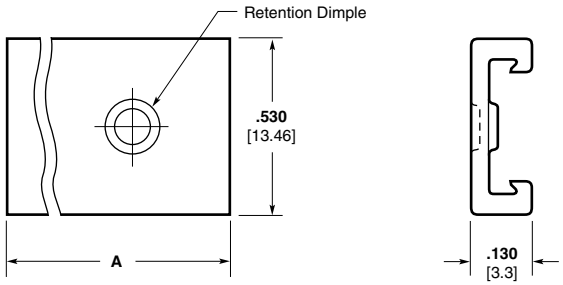

Cover Ordering Information

The "Base Part Numbers" Chart at right shows the base part number and number of circuits available for the described cover.

Prefixes and suffixes are determined by the number of circuit positions in the cover. For example, the complete part number for a 12-position dust cover would be:

Base number **641106** plus prefix-and-suffix

1- — -2

The correct ordering number is

1-641106-2

Base Part Number

Cover Part No.	No. of Circuits
641106	3, 6, 9, 12, 15, 18, 20-24

No. of Circuits	Dim. A	Prefix/ Suffix
3	**.504** 12.80	-3
6	**.972** 24.69	-6
9	**1.440** 36.58	-9
12	**1.908** 48.46	1- -2
15	**2.376** 60.35	1- -5
18	**2.844** 72.24	1- -8
20	**3.156** 80.16	2- -0
21	**3.312** 84.12	2- -1
22	**3.468** 88.09	2- -2
23	**3.624** 92.05	2- -3
24	**3.780** 96.01	2- -4

Locking Plugs

Material (RoHS Compliant)

UL94V-2 rated, nylon, white

Part Number 641101-1

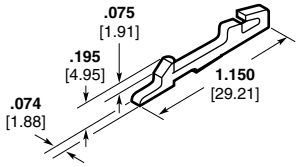

Note: Contact must be removed to install locking plug.

Material (RoHS Compliant)

UL94V-2 rated, nylon, white

Part Number 641293-1

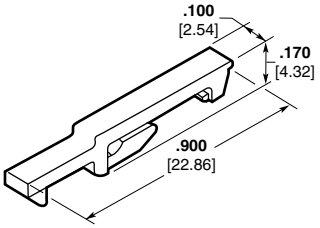

Note: Contact can remain during locking plug installation.

Replacement IDC Contacts

Material and Finish

Phosphor bronze; post tin plated

Part Numbers

3-640991-1 (18 AWG [0.8-0.9 mm²])
3-640992-1 (20 AWG [0.5-0.6 mm²])
3-640993-1 (22 AWG [0.3-0.4 mm²])
3-640994-1 (24 AWG [0.2 mm²])
3-640995-1 (26 AWG [0.12-0.15 mm²])

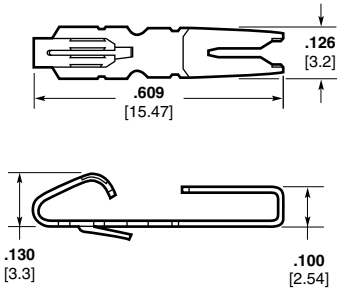

Catalog 82056
Revised 6-08

www.tycoelectronics.com

Dimensions are in inches and millimeters unless otherwise specified. Values in brackets are metric equivalents.

Dimensions are shown for reference purposes only. Specifications subject to change.

USA: 1-800-522-6752
Canada: 1-905-470-4425
Mexico: 52-55-1106-0800
C. America: 57-1-254-4444

South America: 55-11-2103-6000
Hong Kong: 852-2735-1628
Japan: 81-44-844-8013
UK: 44-208-420-8341

.156 [3.96] Centerline SL-156 Crimp Contacts and Housings

Product Facts

- **Rugged wire-to-board interconnection to mate with .045 square or round post headers or staked posts on .156 centers**
- **Standard Connectors accept wire range of 18–24 AWG [0.9–0.2 mm²] and LID Connectors accept wire range of 18–24 AWG [0.9–0.2 mm²] and a limited 16 AWG [1.29–1.42 mm²] (2550–2800 CMA)**
- **Two-piece interconnection system (connector/header)**
- **Housing made of flame retardant nylon**
- **Available in 1- through 24-position connector configurations**
- **Connectors are end-to-end stackable**
- **Wire-to-board system offers polarization with friction lock for positive mating**
- **Meets the material requirements of Table 23.1 of UL1410 Standard for High-Voltage Television Receivers and Video Productions**
- **Recognized under the Component Program of Underwriters Laboratories Inc., File No. E28476**
- **Certified by Canadian Standards Association, File No. LR7189**

Technical Documents

Product Specification
108-1049, 108-1049-1, 108-1049-2

Application Specification
114-1021

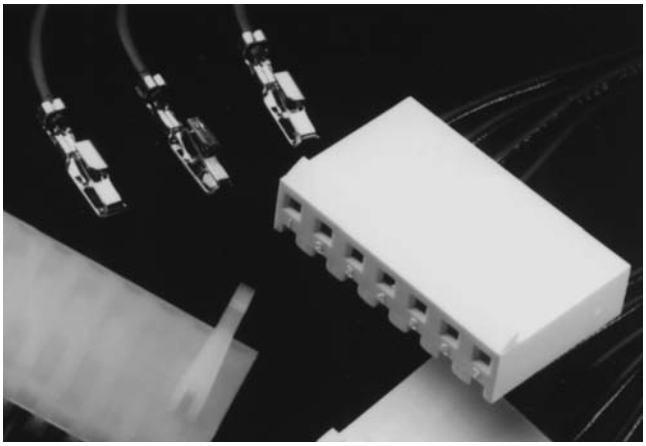

The AMP SL-156 connectors shown on the following pages are designed to mate with .045 [1.14] square or round post headers or staked posts on .156 [3.96] centers.

The wire-to-board connector is a two-piece connector system with the wire crimped to the contact, then inserted into the housing. This product mates with the MTA-156 flat, polarized and friction lock header, or staked posts (**not** MTA-156 shrouded headers).

Performance Data

Voltage Rating — 250 vac

Current Rating —
10 amp max. at 250 vac

Low-Level Resistance —
3.0 mΩ max. initial

Dielectric Withstanding Voltage —
2000 vac/1 min.

Insulation Resistance —
1000 MΩ min. initial

Operating Temperature —
−55° C to +105° C

The Large Insulation Diameter (LID) Contacts and Housings are for use in applications where wire insulation is up to .112 [2.84] in diameter.

These matrixes represent only the housing and header combinations. You also need to consider the plating on the contacts and headers. Gold contacts with gold headers and tin contacts with tin headers.

Matrix for Tin Plated Part Numbers

			Headers																											
			640383	640384	640385	640387	640388	640389	640445	644611	644612	644613	644614	644615	644616	644617	644749	644750	644751	644752	644753	644754	644755	647227	647228	647229	647230	647260	647262
	Standard	LID																											
Housings	640250	647401	Y	Y	Y	N	Y	Y	Y	Y	Y	Y	N	Y	Y	Y	Y	Y	Y	Y	Y	Y	N	Y	Y	Y	N	Y	Y
	640251	647400	Y	Y	Y	Y	Y	Y	Y	Y	Y	Y	Y	Y	Y	Y	Y	Y	Y	Y	Y	Y	Y	Y	Y	Y	Y	Y	Y
	770849	647402	Y	Y	Y	N	Y	Y	Y	Y	Y	Y	N	Y	Y	Y	Y	Y	Y	Y	Y	Y	N	Y	Y	Y	N	Y	Y

Matrix for .000030 [0.00076] Gold Plated Part Numbers

			Headers																											
			641202	641203	641204	641207	641208	641209	641210	644627	644628	644629	644630	644631	644632	644633	644756	644757	644758	644759	644760	644761	644762							
	Standard	LID																												
Housings	640250	647401	Y	Y	Y	N	Y	Y	Y	Y	Y	Y	N	Y	Y	Y	Y	Y	Y	Y	Y	Y	N							
	640251	647400	Y	Y	Y	Y	Y	Y	Y	Y	Y	Y	Y	Y	Y	Y	Y	Y	Y	Y	Y	Y	Y							
	770849	647402	Y	Y	Y	N	Y	Y	Y	Y	Y	Y	N	Y	Y	Y	Y	Y	Y	Y	Y	Y	N							

Matrix for .000015 [0.00038] Gold Plated Part Numbers

			Headers															
			641113	641114	641115	641118	641119	641120	641121	644322	644763	644764	644765	644766	644767	644768	644769	647261
	Standard	LID																
Housings	640250	647401	Y	Y	Y	N	Y	Y	Y	Y	Y	Y	Y	Y	Y	Y	N	Y
	640251	647400	Y	Y	Y	Y	Y	Y	Y	Y	Y	Y	Y	Y	Y	Y	Y	Y
	770849	647402	Y	Y	Y	N	Y	Y	Y	Y	Y	Y	Y	Y	Y	Y	N	Y

Catalog 82056
Revised 6-08

www.tycoelectronics.com

Dimensions are in inches and millimeters unless otherwise specified. Values in brackets are metric equivalents.

Dimensions are shown for reference purposes only. Specifications subject to change.

USA: 1-800-522-6752
Canada: 1-905-470-4425
Mexico: 52-55-1106-0800
C. America: 57-1-254-4444

South America: 55-11-2103-6000
Hong Kong: 852-2735-1628
Japan: 81-44-844-8013
UK: 44-208-420-8341

SL-156 Crimp Contacts and Keying Plugs

Contacts

Material and Finish

.012 [0.3] bright tin plated brass or phosphor bronze; .012 [0.3] pre-tin brass; or .012 [0.3] brass or phosphor bronze with .000030 [0.00076] gold over nickel (see chart)

- All tin-plated contacts are post lubricated to resist fretting corrosion
- Maximum insulation diameter is .105 [2.67]
- Wire range is 18-30 AWG [0.9-0.06 mm²]

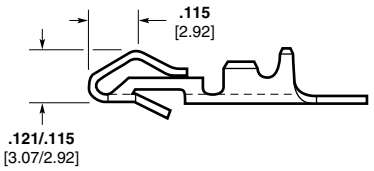

A
High Force
(6.5 Amp Max. Current Rating)

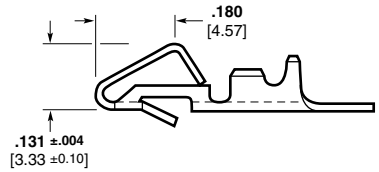

B
Low Force
(6.5 Amp Max. Current Rating)

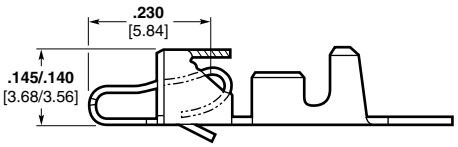

C
Hooded (Dual Wipe)
(10 Amp. Max. Current Rating)

Wire Size AWG mm²	Contact	Material and Finish	Part Numbers Strip	Part Numbers Loose Piece
24–30 0.2-0.06	A	brass, pre-tin plated	641550-1	—
18–24 0.9-0.2	A	brass, bright tin plated	640252-1	640706-1
		brass, pre-tin plated	640252-2	640706-2
		brass, **RoHS Compliant**	3-640252-1	3-640706-1
	B	brass, bright tin plated	350980-1	640707-1
		brass, pre-tin plated	350980-2	—
		brass, gold plated	350980-3	770258-1
		brass, **RoHS Compliant**	3-350980-1	3-640707-1
	C	phosphor bronze, bright tin plated	770476-1	770522-1
		phosphor bronze, gold plated	770476-2	770522-2
		phosphor bronze, **RoHS Compliant**	3-770476-1	3-770522-1

Application Note

Part No. 640252 has a higher mating and unmating force than Part No. 350980 and is recommended to be used only in housings with 1 through 12 positions.
Part No. 350980 can be used in any size housing but is recommended to be used in housings with 13 through 24 positions.
Part No. 770476 is recommended for use in any size housing. Its mating force is similar to Part No. 350980 while unmating force is similar to 640252.

For housings, see pages 60 and 61.

Application Tooling

Extraction Tool
Part No. 90471-1

Loose Piece Contacts —

PRO-CRIMPER II Hand Tool
Part No. 58614-1 (408-4228)
[For field service use only]

For CERTI-CRIMP hand tool, contact Technical Support.

Strip Contacts —

AMP-O-LECTRIC Model "G" Termination Machine* Applicator 680211-3 (Request Catalog 65828)

AMP-O-LECTRIC Model "K" Termination Machine* Applicator 466468-2

AMP-O-MATIC Stripper-Crimper Machine* SCA 466947-1 or 567828-1 (with CQM) (Request Catalog 65004)

AMPOMATOR CLS IV+ Lead Making Machine* Applicator 466468-1 (Request Catalog 82659)

*Requires applicators. For part numbers, call Technical Support.

Keying Plugs

Material (RoHS Compliant)

UL94V-2 rated, nylon, natural color

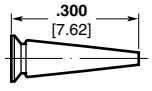

Keying Plug
Part No. 640254-1

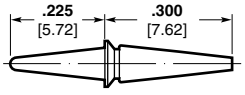

Keying Pin
Part No. 640255-1

Catalog 82056
Revised 6-08

www.tycoelectronics.com

Dimensions are in inches and millimeters unless otherwise specified. Values in brackets are metric equivalents.

Dimensions are shown for reference purposes only. Specifications subject to change.

USA: 1-800-522-6752
Canada: 1-905-470-4425
Mexico: 52-55-1106-0800
C. America: 57-1-254-4444

South America: 55-11-2103-6000
Hong Kong: 852-2735-1628
Japan: 81-44-844-8013
UK: 44-208-420-8341

SL-156 Housings—Wire-to-Board

Housings

Material (RoHS Compliant)

UL94V-0 rated, nylon, white

Notes:
1. Accepts either .045 [1.14] square or round posts. Housings mate with flat and friction lock headers, or staked posts on .156 [3.96] centers.
2. Housings without ramp, with polarizing tab, available upon request. Minimums may apply.
3. Recommend contact: Part No. 640252 for 1 thru 12 positions; Part No. 350980 for 13 thru 24 positions; Part No. 770476 for 1 thru 24 positions.

For contacts, see page 59.

For mateability options, see matrix on page 58.

For mating half visuals, for connectors with locking ramp, see pages 46, 47, 48, 50 and 52, (49 and 51 Front Bend Headers only.)

For mating half visuals, for connectors without locking ramp, see pages 46 thru 52.

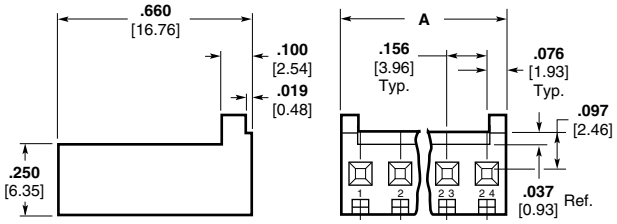

(A) With Locking Ramp/With Polarizing Tabs

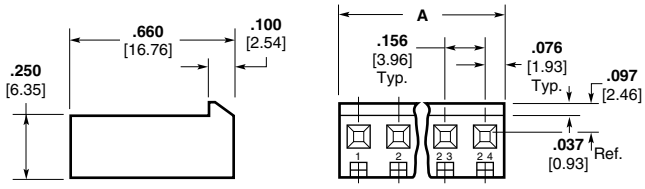

(B) With Locking Ramp/Without Polarizing Tabs

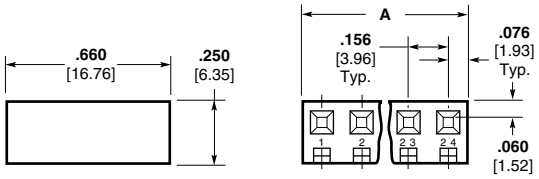

(C) Without Locking Ramp/Without PolarizingTabs

Note: Dim. A = 0.156 × (No. of Positions – 1) + 0.152

No. of Positions*	Housing	Description	Part Numbers*
2–24	A	With Locking Ramp and Polarizing Tabs	770849
1–24	B	With Locking Ramp and without Polarizing Tabs	640250
	C	Without Locking Ramp or Polarizing Tabs	640251

*Base Part Number Prefixes and Suffixes indicate number of contact positions, e.g. 2 Position = 0-xxxxxx-2 and 12 Position = 1-xxxxxx-2.

Note: Housings not for use with LID Contacts. Shown on page 62.

Catalog 82056
Revised 6-08

www.tycoelectronics.com

Dimensions are in inches and millimeters unless otherwise specified. Values in brackets are metric equivalents.

Dimensions are shown for reference purposes only. Specifications subject to change.

USA: 1-800-522-6752
Canada: 1-905-470-4425
Mexico: 52-55-1106-0800
C. America: 57-1-254-4444

South America: 55-11-2103-6000
Hong Kong: 852-2735-1628
Japan: 81-44-844-8013
UK: 44-208-420-8341

SL-156 Housings With Through Board Latch

Housings

Material (RoHS Compliant)

UL94V-2 rated, nylon, white

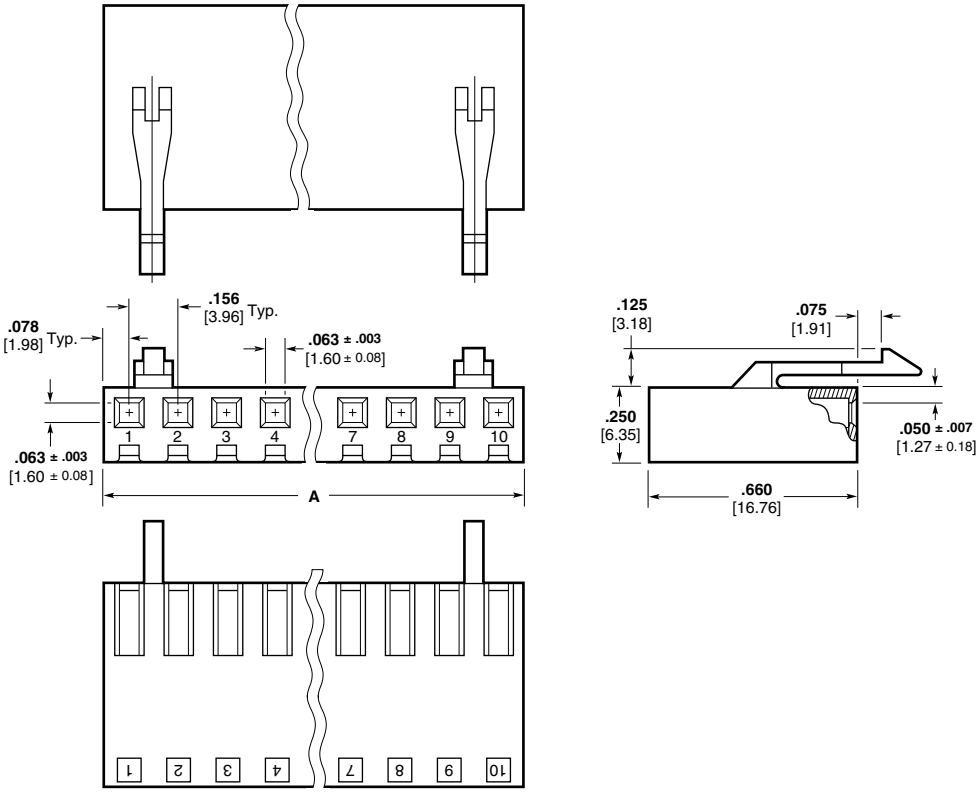

Mates with .045 square or round staked posts only.

For contacts, see page 59
.

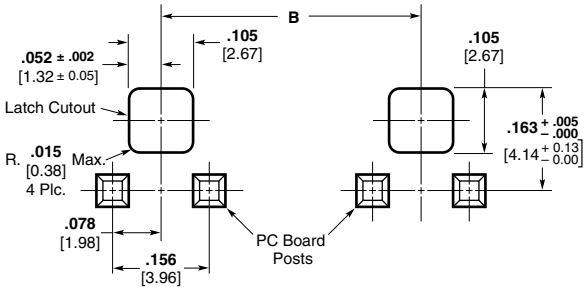

Recommended PC Board Cutout for .062 [1.57] Thick PC Board

No. of Pos.	Dimensions A	Dimensions B	Latch Location Centered Between Pos.	Part Number
2	**.312** 7.92	—	1 and 2	770894-2
3	**.468** 11.89	—	1 and 2	770894-3
4	**.624** 15.85	—	2 and 3	770894-4
5	**.780** 19.81	—	2 and 3	770894-5
6	**.936** 23.77	—	3 and 4	770894-6
7	**1.092** 27.74	—	3 and 4	770894-7
8	**1.248** 31.70	—	4 and 5	770894-8
9	**1.404** 35.66	**1.092** 27.74	1 and 2 & 8 and 9	770894-9
10	**1.560** 39.62	**1.248** 31.70	1 and 2 & 9 and 10	1-770894-0

Note: Not for use with LID Contacts. Shown on page 62.

Catalog 82056
Revised 6-08

www.tycoelectronics.com

Dimensions are in inches and millimeters unless otherwise specified. Values in brackets are metric equivalents.

Dimensions are shown for reference purposes only. Specifications subject to change.

USA: 1-800-522-6752
Canada: 1-905-470-4425
Mexico: 52-55-1106-0800
C. America: 57-1-254-4444

South America: 55-11-2103-6000
Hong Kong: 852-2735-1628
Japan: 81-44-844-8013
UK: 44-208-420-8341

SL-156 Housings and Contacts for Large Insulation Diameter (LID) Wire

Housings

Material (RoHS Compliant)

UL 94V-0 rated, nylon, white

Notes:
1. Accepts Standard and LID contacts.
2. Larger opening in housings eases contact insertion when using wires that have large insulation diameters (.100-.112 [2.54-2.84]).
3. Housings are not End-to-End stackable.

For mateability options, see matrix on page 58.

For mating half visuals, for connectors with locking ramp, see pages 46, 47, 48, 50 and 52, (49 and 51 Front Bend Headers only.)

For mating half visuals, for connectors without locking ramp, see pages 46 thru 52.

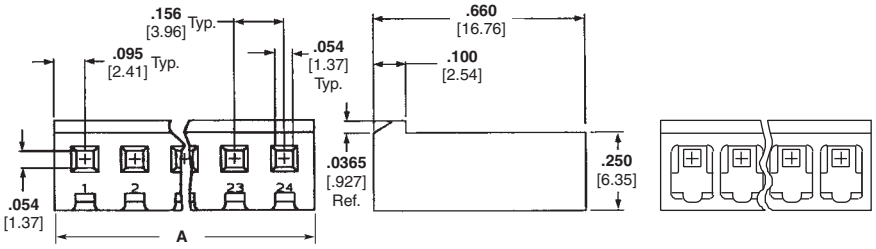

Note: Dim. A = 0.156 × (No. of Positions – 1) + 0.19

No. of Positions*	Description	Part Numbers* Housings with Larger Openings for Oversize Wire
1-24	Without Locking Ramp or Polarizing Tabs	647400
	With Locking Ramp and without Polarizing Tabs	647401 (shown above)
2–24	With Locking Ramp and Polarizing Tabs	647402

*Base Part Number Prefixes and Suffixes indicate number of contact positions, e.g. 2 Position = 0-xxxxxx-2 and 12 Position = 1-xxxxxx-2.

Contacts

Material and Finish

.012 [0.3] bright tin plated phosphor bronze; .012 [0.3] phosphor bronze with .000030 [0.00076] gold over nickel (see chart)

- All tin-plated contacts are post lubricated to resist fretting corrosion
- Maximum insulation diameter is .112 [2.85]
- Wire range is 18-24 AWG [0.9-0.2 mm²] and a limited 16 AWG [1.29-1.42 mm²] (2550-2800 CMA)

Product Specifications

108-1049-1 and 108-1049-2

Application Specification

114-1021

Application Tooling

Extraction Tool Part No. 90471-1

Loose Piece Contacts —
PRO-CRIMPER II Hand Tool
Part No. 91368-1 [18-24 AWG]
Part No. 91369-1 [16 AWG]
(For field service use only.)
For CERTI-CRIMP hand tool, contact Technical Support.

Strip Contacts —
AMP-O-LECTRIC Model "G"
Termination Machine*
Applicator 1385048-3 [18-24 AWG]
Applicator 1385219-3 [16 AWG]

AMP-O-LECTRIC Model "K"
Termination Machine*
Applicator 1385048-2 [18-24 AWG]
Applicator 1385219-2 [16 AWG]

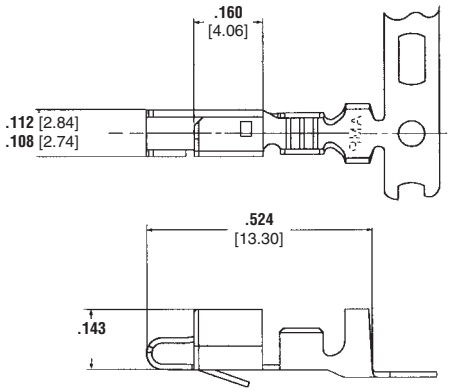

**Hooded (Dual Wipe)
(10 Amp Max. Current Rating)**

Wire Size	Material	Plating	Part Numbers For LID* Wire	
			Strip	Loose Piece
18-24 AWG	Phosphor Bronze	Tin	647406-1	647409-1
		Gold	647406-2	647409-2
		RoHS Compliant	3-647406-1	3-647409-1
16 AWG (2550-2800 CMA only)	Phosphor Bronze	Tin	647466-1	647485-1
		Gold	647466-2	647485-2
		RoHS Compliant	3-647466-1	3-647485-1

*Large Insulation Diameter (.100-.112 [2.54-2.84])
Notes: 1. For information on application tooling, call Technical Support.
2. Can **not** be used with Standard SL-156 Housings, must be used with LID Housings only.

*For additional part numbers and information contact Technical Support.

Catalog 82056
Revised 6-08

www.tycoelectronics.com

Dimensions are in inches and millimeters unless otherwise specified. Values in brackets are metric equivalents.

Dimensions are shown for reference purposes only. Specifications subject to change.

USA: 1-800-522-6752
Canada: 1-905-470-4425
Mexico: 52-55-1106-0800
C. America: 57-1-254-4444

South America: 55-11-2103-6000
Hong Kong: 852-2735-1628
Japan: 81-44-844-8013
UK: 44-208-420-8341

AMP Economy Power (EP) Wire-to-Board Connector System

Product Facts

- **.156 [3.96], .200 [5.08] and .312 [7.92] centerline**
- **Wire-to-board connectors comprised of plug housings, receptacle contacts for discrete wire, and mating post headers**
- **Hooded contact designed to accept wire with insulation diameters up to .118 [3.00]**
- **Positive locking feature built into header back wall**
- **Locking mechanism on connector housing maximizes retention**
- **Number of positions: 1 to 11 for .156 [3.96] centerline; 2 to 12 for .200 [5.08] centerline; and 2 to 5 for .312 [7.92] centerline**
- **Straight, through-hole headers**
- **Positive latch design for easier mating and unmating**
- **Polarization tabs help prevent post misalignment and mismating**
- **Low-profile mating height of .641 [16.3] for 2 to 11 positions**
- **Straight headers are end-to-end stackable to conserve PCB space**
- **Header packaging: bulk pack and tube loaded**
- **Plug housings and post headers intermateable with JST VH connectors**
- **Directive 2002/95/EC (RoHS Compliant**
- **Recognized under the Component Program of Underwriters Laboratories Inc., File No. E28476**
- **Certified by Canadian Standards Association, File No. LR 7189**

Applications

- **Household appliances, garage door openers, power supplies, power connections, or other areas requiring additional connector retention**

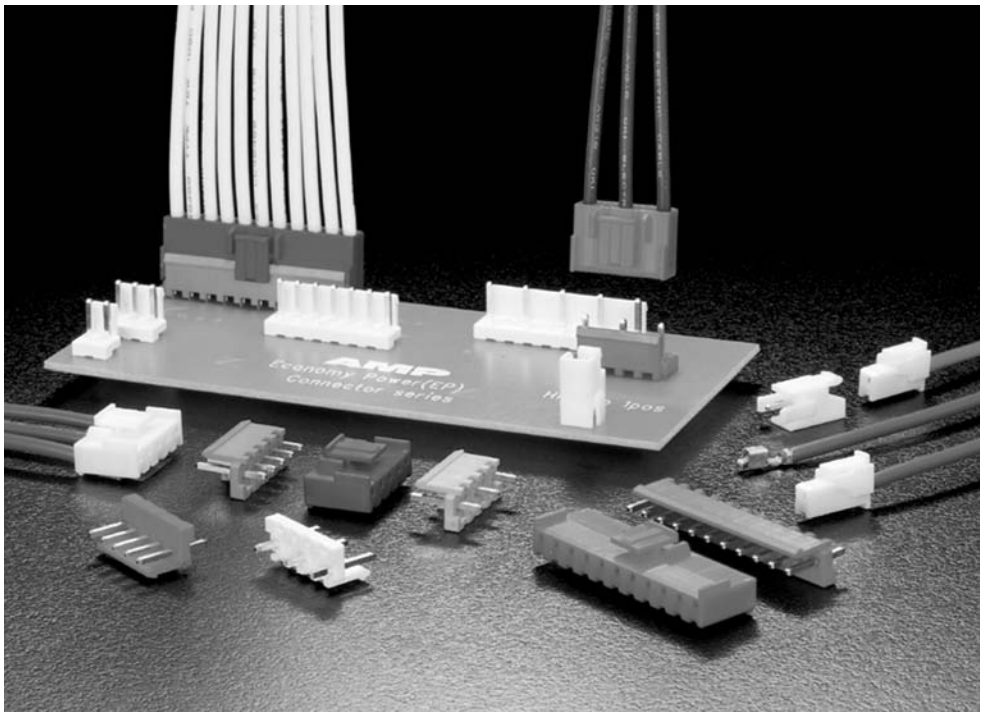

AMP Economy Power (EP) Connectors are designed for secondary power circuit applications. They consist of wire-to-pc board plug housings (for receptacle contacts) and mating post headers. Three contact centerline spacings are available: .156 [3.96], .200 [5.08] and .312 [7.92].

During mating, the positive locking lever on the outside of the plug housing engages the mating header housing to provide for greater retention. This helps maintain reliable connections, when other non-locking type connectors could vibrate apart. This same locking lever must be depressed to unmate the connectors.

The locking mechanism is also located high enough to help avoid interference with pc board clear plastic coating (potting), which is a common treatment for many home appliances.

Headers with .156 [3.96] centerline are offered in 2 through 11 positions; 2 through 12 positions for .200 [5.08] centerline; and .312 [7.92] centerline are available in 2 through 5 positions. Both versions are provided in bulk pack or in tubes for automatic machines.

The slim, straight, post headers are stackable end-to-end for greater flexibility when designing pc board configurations.

The mating height of a low-profile plug and vertical header is .642 [16.3]; even the 1-position high-profile style measures only .732 [18.6] above the pc board. Compact dimensions like these are well suited for most applications in confined spaces.

Performance Characteristics

Voltage Rating — 250 VAC

Current Rating — 7.5 amp max. (2 to 11 pos.), 8 amp max. (1 pos.)

Low Level Overall Resistance–
Initial — 10 mΩ max.
Final — 20 mΩ max.

Dielectric Withstanding Voltage — 1.5 kV AC, 1 min.

Insulation Resistance —
Initial — 1000 MΩ min.
Final — 500 MΩ min.

Durability — 50 mating and unmating cycles

Operating Temperature — -13˚F to +221˚F [-25°C to +105°C]

Wire Size Range — 18-22 AWG [0.89-0.30 mm^2]

Insulation Diameter — .118 [3.00] max.

Technical Documents

Product Specification
108-5609

Application Specification
114-5253

Instruction Sheet
411-5899

Catalog 82056
Revised 6-08

www.tycoelectronics.com

Dimensions are in inches and millimeters unless otherwise specified. Values in brackets are metric equivalents.

Dimensions are shown for reference purposes only. Specifications subject to change.

USA: 1-800-522-6752
Canada: 1-905-470-4425
Mexico: 52-55-1106-0800
C. America: 57-1-254-4444

South America: 55-11-2103-6000
Hong Kong: 852-2735-1628
Japan: 81-44-844-8013
UK: 44-208-420-8341

AMP Economy Power (EP) Wire-to-Board Connector System (Continued)

Contacts and Plug Housings, Low-Profile

Crimp, Snap-in Receptacle Contacts

Material and Finish (RoHS Compliant)
See chart.

Related Product Data
Plug Housings — Pages 64, 67 and 69

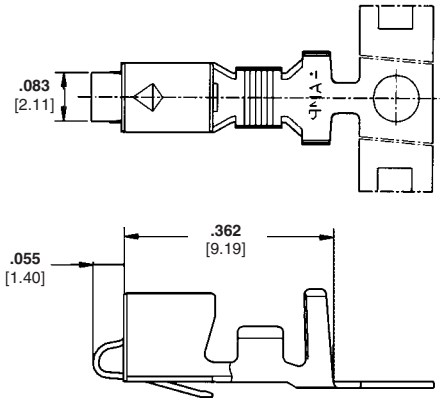

Wire Size Range AWG	Wire Size Range mm²	Wire Insulation Diameter	Material and Finish	Part Number Strip Form	Part Number Loose Piece	Applicator Part Number AMPOMATOR CLS IV+ Lead Maker Base Part No. 356500	Applicator Part Number AMP-O-LECTRIC Terminator Model K Part No. 1-471273-3	Applicator Part Number AMP-O-LECTRIC Terminator Model G Part No. 354500-1
18–22	0.89-0.30	**.067-.118** 1.70-3.00	Phos. Brz., Pre-Tin	1123721-1	1318912-1*	1385286-1	1385286-2	1385286-3
			Brass, Pre-Tin	1123721-2	—			

* For 18–20 AWG, use Straight Action Hand Tool (SAHT) Part Number 91579-1.

Plug Housings, Low-Profile

Material and Finish (RoHS Compliant)
Housing — UL 94V-0 rated nylon, natural color
Note: Alternate colors available upon request. Minimums may apply. Please contact product engineer or product manager for details.

Related Product Data
Contacts — see above
Mating Post Headers — Pages 65 and 66

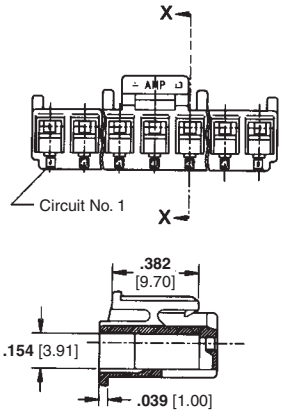

Section X-X

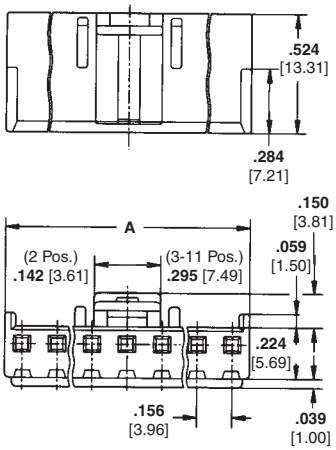

Number of Positions	Dimension A	Part Number
2	**.310** [7.86]	1-1123722-2
3	**.465** [11.82]	1-1123722-3
4	**.621** [15.78]	1-1123722-4
5	**.777** [19.74]	1-1123722-5
6	**.933** [23.70]	1-1123722-6
7	**1.089** [27.66]	1-1123722-7
8	**1.245** [31.62]	1-1123722-8
9	**1.401** [35.58]	1-1123722-9
10	**1.557** [39.54]	1-1123722-0
11	**1.713** [43.50]	1-1123722-1
12	**1.878** [47.70]	1-647690-2*

* Consult Product Drawing for dimensional detail.

Catalog 82056
Revised 6-08

www.tycoelectronics.com

Dimensions are in inches and millimeters unless otherwise specified. Values in brackets are metric equivalents.

Dimensions are shown for reference purposes only. Specifications subject to change.

USA: 1-800-522-6752
Canada: 1-905-470-4425
Mexico: 52-55-1106-0800
C. America: 57-1-254-4444

South America: 55-11-2103-6000
Hong Kong: 852-2735-1628
Japan: 81-44-844-8013
UK: 44-208-420-8341

AMP Economy Power (EP) Wire-to-Board Connector System (Continued)

Straight and Right-Angle Low-Profile Post Headers

.156 [3.96] Centerline

Material and Finish (RoHS Compliant)

Housing — UL 94V-0 rated natural color

Note: Alternate colors available upon request. Minimums may apply. Please contact product engineer or product manager for details.

Post — Tin-plated brass

Related Product Data

Mating Plug Housings — Page 64

Straight

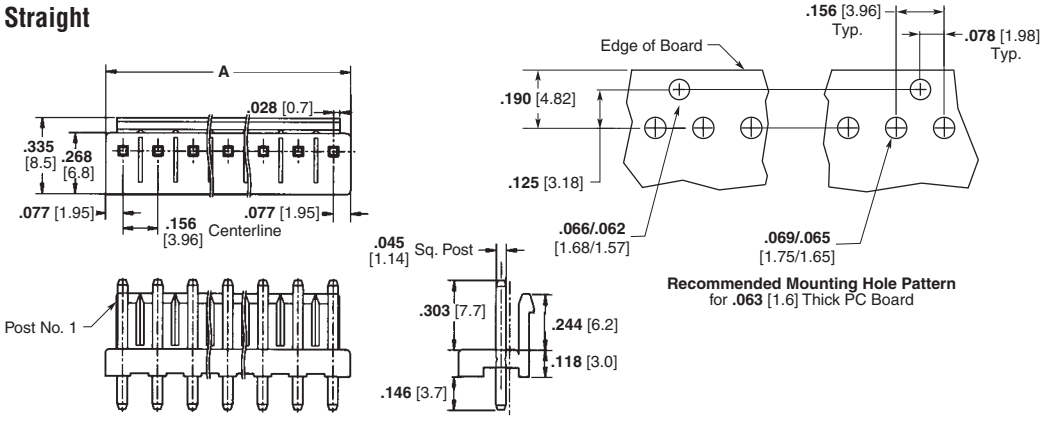

Number of Positions	Dimension A	Part Number		
		Bulk Pack	Tube Loaded (Pcs. per Tube)	Bulk Pack with Pegs
2	**.310** [7.86]	1-1123723-2	1-1318300-2 (61)	1744057-2
3	**.465** [11.82]	1-1123723-3	1-1318300-3 (40)	1744057-3
4	**.621** [15.78]	1-1123723-4	1-1318300-4 (30)	1744057-4
5	**.777** [19.74]	1-1123723-5	1-1318300-5 (24)	1744057-5
6	**.933** [23.70]	1-1123723-6	1-1318300-6 (20)	1744057-6
7	**1.089** [27.66]	1-1123723-7	1-1318300-7 (17)	1744057-7
8	**1.245** [31.62]	1-1123723-8	1-1318300-8 (15)	1744057-8
9	**1.401** [35.58]	1-1123723-9	1-1318300-9 (13)	1744057-9
10	**1.557** [39.54]	1-1123723-0	1-1318300-0 (12)	1-1744057-0
11	**1.713** [43.50]	1-1123723-1	1-1318300-1 (11)	1-1744057-1
12	**1.871** [47.52]	1-647689-2*	—	1-1744057-2

* Consult Product Drawing for dimensional detail.

.156 [3.96] Centerline

Material and Finish (RoHS Compliant)

Housing — UL 94V-0 rated nylon, natural color

Note: Alternate colors available upon request. Minimums may apply. Please contact product engineer or product manager for details.

Post — Tin-plated brass

Related Product Data

Mating Plug Housings — Page 64

Right-Angle

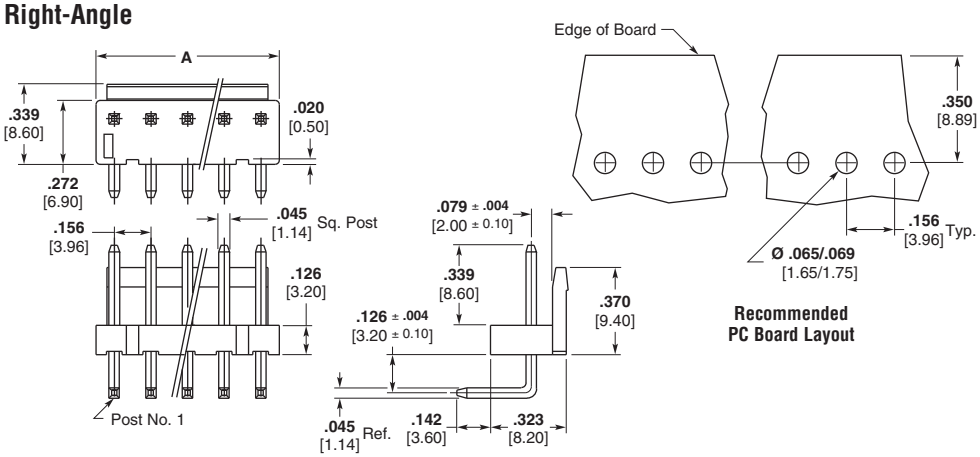

Number of Positions	Dimension A	Part Number
2	**.312** [7.92]	647676-2
3	**.468** [11.88]	647676-3
4	**.624** [15.84]	647676-4
5	**.780** [19.80]	647676-5
6	**.935** [23.76]	647676-6
7	**1.091** [27.72]	647676-7
8	**1.247** [31.68]	647676-8
9	**1.403** [35.64]	647676-9
10	**1.559** [39.60]	1-647676-0
11	**1.715** [43.56]	1-647676-1
12	**1.871** [47.52]	1-647676-2

Catalog 82056
Revised 6-08

www.tycoelectronics.com

Dimensions are in inches and millimeters unless otherwise specified. Values in brackets are metric equivalents.

Dimensions are shown for reference purposes only. Specifications subject to change.

USA: 1-800-522-6752
Canada: 1-905-470-4425
Mexico: 52-55-1106-0800
C. America: 57-1-254-4444

South America: 55-11-2103-6000
Hong Kong: 852-2735-1628
Japan: 81-44-844-8013
UK: 44-208-420-8341

AMP Economy Power (EP) Wire-to-Board Connector System (Continued)

Straight and Right-Angle Low-Profile Post Headers, High Temperature

.156 [3.96] Centerline

Material and Finish (RoHS Compliant)

Housing — UL 94V-0 rated nylon, high temperature, natural color

Note: Alternate colors available upon request. Minimums may apply. Please contact product engineer or product manager for details.

Post — Tin-plated brass

Related Product Data

Mating Plug Housings — Page 64

Straight

Maximum Temperature Rating: 280°C

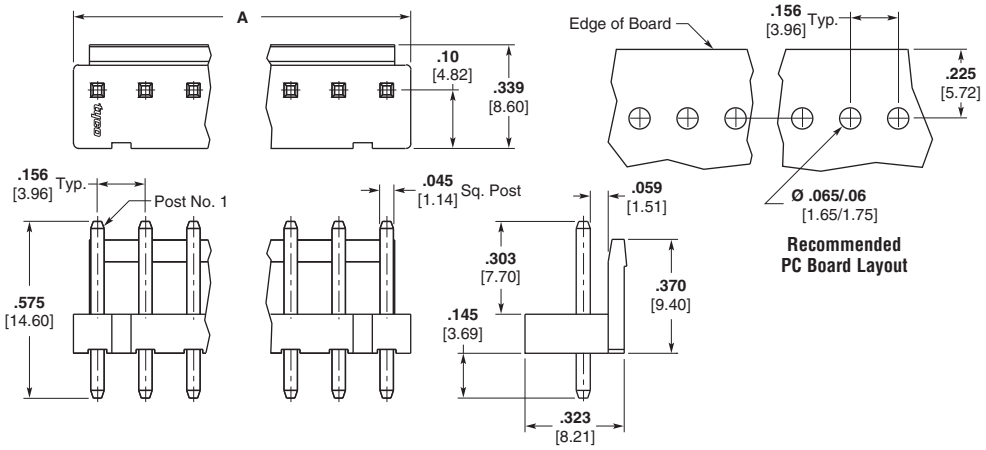

Number of Positions	Dimension A	Part Number
2	**.312** [7.92]	1744055-2
3	**.468** [11.88]	1744055-3
4	**.624** [15.84]	1744055-4
5	**.780** [19.80]	1744055-5
6	**.935** [23.76]	1744055-6
7	**1.091** [27.72]	1744055-7
8	**1.247** [31.68]	1744055-8
9	**1.403** [35.64]	1744055-9
10	**1.559** [39.60]	1-1744055-0
11	**1.715** [43.56]	1-1744055-1

Right-Angle

.156 [3.96] Centerline

Material and Finish (RoHS Compliant)

Housing — UL 94V-0 rated nylon, high temperature, natural color

Note: Alternate colors available upon request. Minimums may apply. Please contact product engineer or product manager for details.

Post — Tin-plated brass

Related Product Data

Mating Plug Housings — Page 64

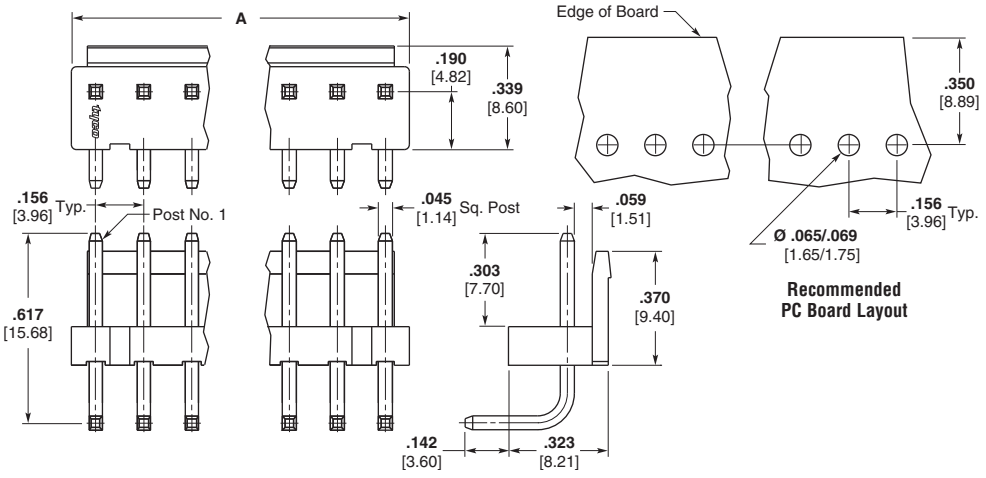

Number of Positions	Dimension A	Part Number
2	**.312** [7.92]	1744056-2
3	**.468** [11.88]	1744056-3
4	**.624** [15.84]	1744056-4
5	**.780** [19.80]	1744056-5
6	**.935** [23.76]	1744056-6
7	**1.091** [27.72]	1744056-7
8	**1.247** [31.68]	1744056-8
9	**1.403** [35.64]	1744056-9
10	**1.559** [39.60]	1-1744056-0
11	**1.715** [43.56]	1-1744056-1
12	**1.871** [47.52]	1-1744056-2

Catalog 82056
Revised 6-08

www.tycoelectronics.com

Dimensions are in inches and millimeters unless otherwise specified. Values in brackets are metric equivalents.

Dimensions are shown for reference purposes only. Specifications subject to change.

USA: 1-800-522-6752
Canada: 1-905-470-4425
Mexico: 52-55-1106-0800
C. America: 57-1-254-4444

South America: 55-11-2103-6000
Hong Kong: 852-2735-1628
Japan: 81-44-844-8013
UK: 44-208-420-8341

AMP Economy Power (EP) Wire-to-Board Connector System (Continued)

Plug Housings and Post Headers

Plug Housings .200 [5.08] Centerline

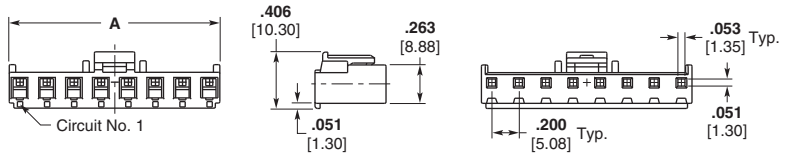

Material and Finish (RoHS Compliant)

Housing — UL 94V-0 rated nylon, natural color

Note: Alternate colors available upon request. Minimums may apply. Please contact product engineer or product manager for details.

Related Product Data

Contacts — Page 64

Mating Post Headers — See below

Number of Positions	Dimension A	Part Number
2	**.353** [8.98]	1744036-2
3	**.553** [14.06]	1744036-3
4	**.753** [19.14]	1744036-4
5	**.953** [24.22]	1744036-5
6	**1.153** [29.30]	1744036-6
7	**1.353** [34.38]	1744036-7
8	**1.553** [39.46]	1744036-8
9	**1.753** [44.54]	1744036-9
10	**1.953** [49.62]	1-1744036-0
11	**2.153** [54.70]	1-1744036-1
12	**2.353** [59.78]	1-1744036-2

Post Headers .200 [5.08] Centerline

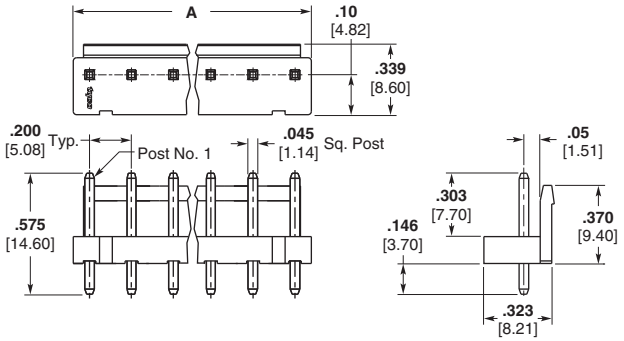

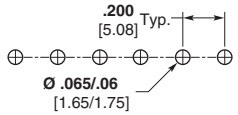

Recommended PC Board Layout

Material and Finish (RoHS Compliant)

Housing — UL 94V-0 rated nylon, natural color

Note: Alternate colors available upon request. Minimums may apply. Please contact product engineer or product manager for details.
Post—Tin-plated brass

Related Product Data

Mating Plug Housings — See above

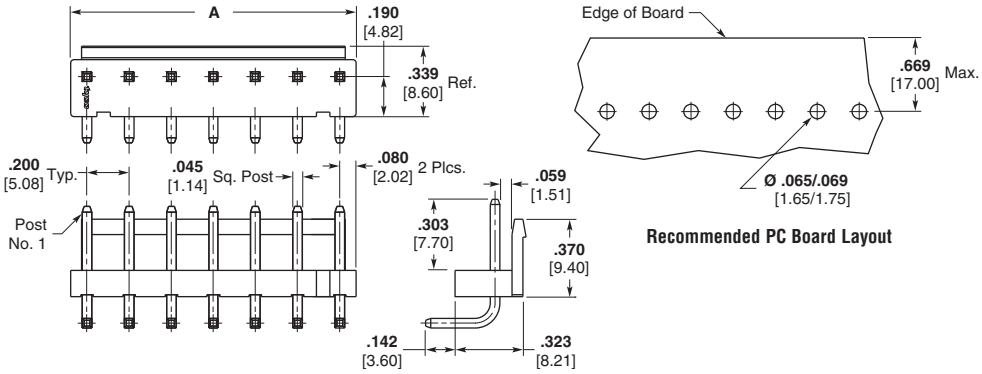

Recommended PC Board Layout

Number of Positions	Dimension A	Part Number	
		Straight	Right-Angle
2	**.302** [7.68]	1744037-2	1744048-2
3	**.502** [12.76]	1744037-3	1744048-3
4	**.702** [17.84]	1744037-4	1744048-4
5	**.902** [22.92]	1744037-5	1744048-5
6	**1.102** [28.00]	1744037-6	1744048-6
7	**1.302** [33.08]	1744037-7	1744048-7
8	**1.502** [38.16]	1744037-8	1744048-8
9	**1.702** [43.24]	1744037-9	1744048-9
10	**1.902** [48.32]	1-1744037-0	1-1744048-0
11	**2.102** [53.40]	1-1744037-1	1-1744048-1
12	**2.302** [58.48]	1-1744037-2	1-1744048-2

Catalog 82056
Revised 6-08

www.tycoelectronics.com

Dimensions are in inches and millimeters unless otherwise specified. Values in brackets are metric equivalents.

Dimensions are shown for reference purposes only. Specifications subject to change.

USA: 1-800-522-6752
Canada: 1-905-470-4425
Mexico: 52-55-1106-0800
C. America: 57-1-254-4444

South America: 55-11-2103-6000
Hong Kong: 852-2735-1628
Japan: 81-44-844-8013
UK: 44-208-420-8341

AMP Economy Power (EP) Wire-to-Board Connector System (Continued)

Straight Post Headers, Low-Profile

.312 [7.92] Centerline

Material and Finish (RoHS Compliant)

Housing — UL 94V-0 rated natural color

Note: Alternate colors available upon request. Minimums may apply. Please contact product engineer or product manager for details.

Post — Tin-plated brass

Related Product Data

Mating Plug Housings — Page 64

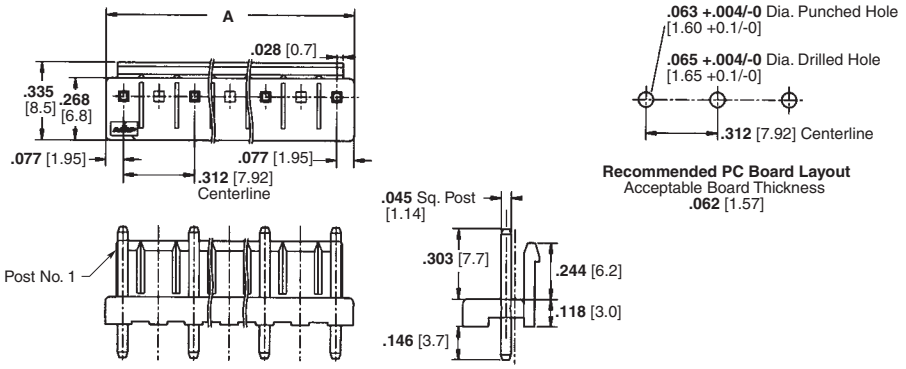

Number of Positions	Dimension A	Part Number	
		Bulk Pack	Tube Loaded (Pcs. per Tube)
2	.465 [11.82]	1-1123724-2	1-1318301-2 (40)
3	.777 [19.74]	1-1123724-3	1-1318301-3 (24)
4	1.089 [27.66]	1-1123724-4	1-1318301-4 (17)
5	1.401 [35.58]	1-1123724-5	1-1318301-5 (13)

Mating Height (Low-Profile)

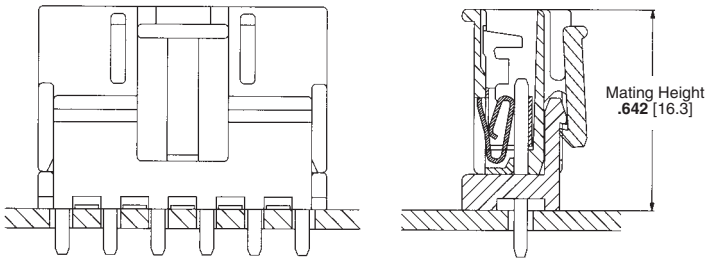

Catalog 82056
Revised 6-08

www.tycoelectronics.com

Dimensions are in inches and millimeters unless otherwise specified. Values in brackets are metric equivalents.

Dimensions are shown for reference purposes only. Specifications subject to change.

USA: 1-800-522-6752
Canada: 1-905-470-4425
Mexico: 52-55-1106-0800
C. America: 57-1-254-4444

South America: 55-11-2103-6000
Hong Kong: 852-2735-1628
Japan: 81-44-844-8013
UK: 44-208-420-8341

AMP Economy Power (EP) Wire-to-Board Connector System (Continued)

Plug Housing and Post Header, High-Profile

1 Position Plug Housing Part Number 1-1123823-1

Material and Finish (RoHS Compliant)

Housing — UL 94V-0 rated nylon, natural color

Note: Alternate colors available upon request. Minimums may apply. Please contact product engineer or product manager for details.

Related Product Data

Contacts — Page 64

Mating Post Header — See below

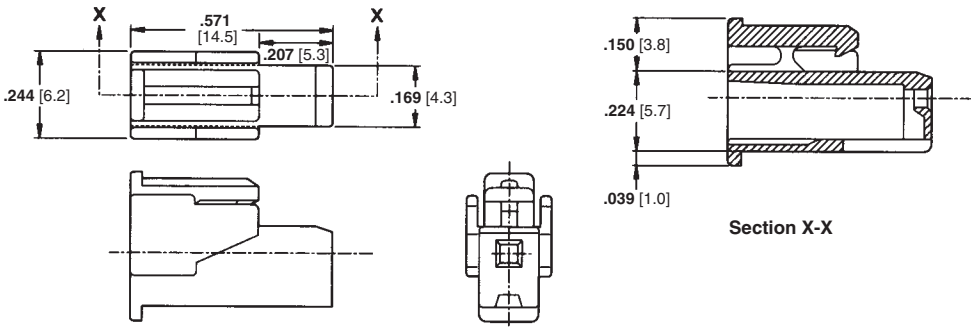

1 Position Post Header, Straight Part Numbers 1-1123824-1 (Bulk Pack) 1-1318831-1 (Tube Loaded, 55 pcs. per Tube)

Material and Finish (RoHS Compliant)

Housing — UL 94V-0 rated nylon, natural color

Note: Alternate colors available upon request. Minimums may apply. Please contact product engineer or product manager for details.

Post — Tin-plated brass

Related Product Data

Mating Plug Housing — See above

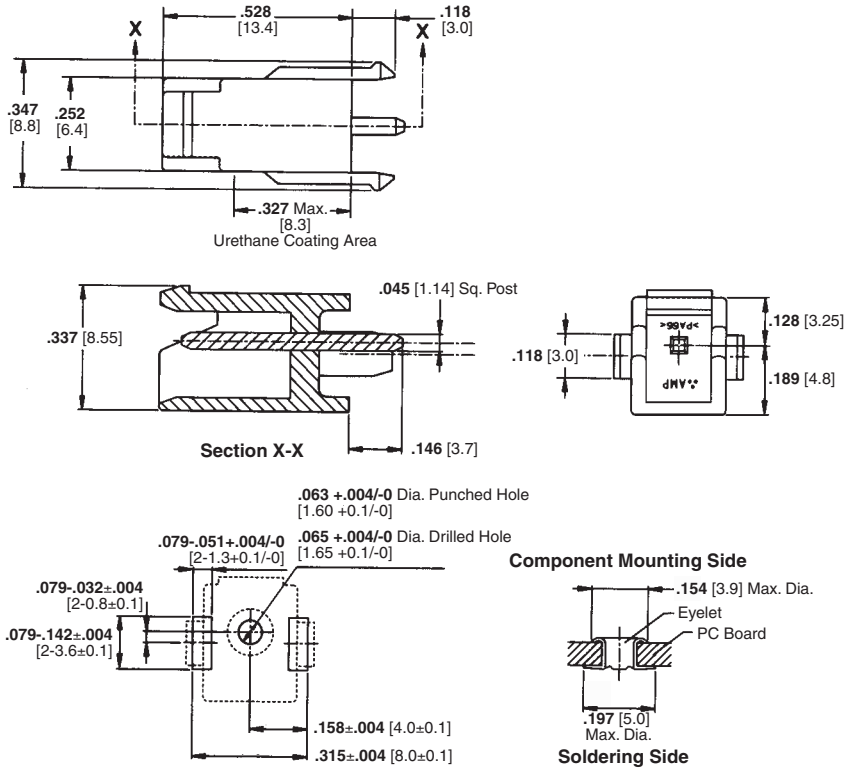

Mating Height (High-Profile)

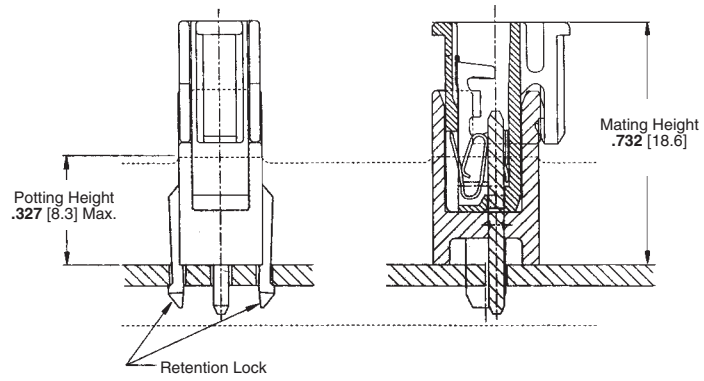

Catalog 82056
Revised 6-08

www.tycoelectronics.com

Dimensions are in inches and millimeters unless otherwise specified. Values in brackets are metric equivalents.

Dimensions are shown for reference purposes only. Specifications subject to change.

USA: 1-800-522-6752
Canada: 1-905-470-4425
Mexico: 52-55-1106-0800
C. America: 57-1-254-4444

South America: 55-11-2103-6000
Hong Kong: 852-2735-1628
Japan: 81-44-844-8013
UK: 44-208-420-8341

MTA Wire Selection

Proper wire selection is critical to the success of a wire-to-board application. The chart identifies wires that have been evaluated and approved by the product engineering section. If you plan to use a wire not on the approved list, please submit a sample 12" length of wire to Tyco Electronics for evaluation.

AWG Metric Equivalents

18—0.8–0.9 mm^2
20—0.5–0.6 mm^2
22—0.3–0.4 mm^2
24—0.2 mm^2
26—0.12–0.15 mm^2
28—0.08–0.09 mm^2

Product Specifications

108-1050—MTA-100 Connectors
108-1050-1—MTA-100 Posted Connectors
108-1051—MTA-156 Connectors
108-1219—MTA-156 Quad Connector System
108-1065—MTA-156 Posted Connectors
108-1058—MTA-156 Card Edge Connectors

Application Specifications

114-1019—MTA-100 Connectors
114-1020—MTA-156 Connectors
114-1031—MTA-100 Ribbon Cable Connector Assembly
114-1032—MTA-156 Ribbon Cable Connector Assembly
114-1048—MTA-156 Quad Connector

MTA Connectors Approved Wire Listing

MTA-100 Connectors	Wall	Approved Wire AWG
UL 1007 PVC Insulation	.015″ [0.381]	22, 24, 26, 28
UL 1061 Semi-Rigid PVC Insulation	.009″ [0.229]	22, 24, 26, 28
UL 1095 Semi-Rigid PVC Insulation	.012″ [0.305]	24
UL 1371 TEFLON Insulation—TFE	.006″ [0.152]	22, 26
UL 1429 Irradiated PVC—X.L.P.V.C.	.010″ [0.254]	22, 24, 26, 28
UL 2464 PVC	.013″ [0.330]	24
UL 3265 Irradiated Polyethylene—X.L.P.E.	.010″ [0.254]	22, 24
UL 3266 Irradiated Polyethylene—X.L.P.E.	.015″ [0.381]	22, 24
MIL-W-16878, Type B-PVC Insulation	.010″ [0.254]	22
UL 1213 TEFLON Insulation—T.F.E.	.010″ [0.254]	22
MTA-156 Connectors		
UL 1007 PVC Insulation	.015″ [0.381]	18, 20, 22, 24
UL 1061 Semi-Rigid PVC Insulation	.009″ [0.229]	18, 20, 22, 24
UL 1180 TEFLON Insulation—T.F.E.	.015″ [0.381]	22
UL 1213 TEFLON Insulation—T.F.E.	010″ [0.254]	18, 22, 24
UL 1316 PVC/Nylon Wall	.015″ [0.381]	18, 22
UL 1429 Irradiated PVC—X.L.P.V.C.	.010″ [0.254]	18, 20, 22, 24
UL 1430 Irradiated PVC—X.L.P.V.C.	.015″ [0.381]	18, 20, 22, 24
UL 1569 PVC	.015″ [0.381]	18
UL 3265 Irradiated Polyethylene—X.L.P.E.	.010″ [0.254]	22
UL 3266 Irradiated Polyethylene—X.L.P.E.	.015″ [0.381]	18, 20, 22, 24

Note: When selecting approved wire styles noted on this list, the MTA Application Specifications guidelines must be followed. Also, due to wire variations in insulation wall thickness, hardness and wire stranding we would recommend evaluating the wire selected before final application approval.

TEFLON is a trademark of E.I. DuPont de Nemours and Company.

MTA-100 Ribbon Cable Preparation

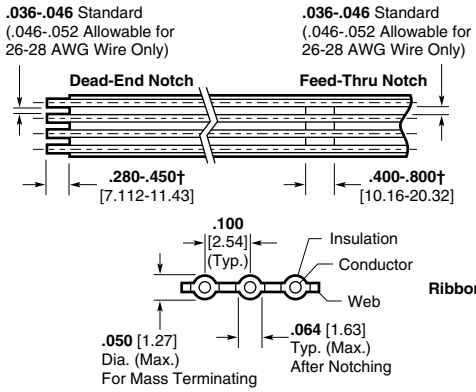

MTA-156 Ribbon Cable Preparation

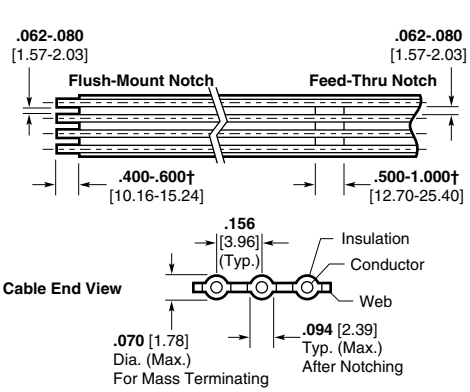

Ribbon Cable End View

† The dimensions shown represent the recommended minimum and maximum for notches; the actual dimension will depend on your application requirements.

Notes:
1. Cable shall be notched, as indicated in the individual ribbon cable connector assembly drawing, according to the requirements specified in these figures. Conductor shall not be exposed after notching, nor shall individual wire stands be cut or nicked.
2. U.L. Style #2651 ribbon cable is approved for use with MTA-100 and MTA-156 connectors per Application Specification 114-1031 and 114-1032.

Ribbon Cable

Notes:
1. For MTA Cable Assemblies Contact US Engineering Cable Assembly Group.
2. For IDC Cable, see pages 71 thru 74.

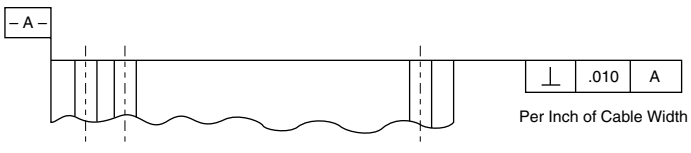

Cable Edge-to-End Alignment
(Ends of the cable shall be prepared as indicated in this figure)

Catalog 82056
Revised 6-08

www.tycoelectronics.com

Dimensions are in inches and millimeters unless otherwise specified. Values in brackets are metric equivalents.

Dimensions are shown for reference purposes only. Specifications subject to change.

USA: 1-800-522-6752
Canada: 1-905-470-4425
Mexico: 52-55-1106-0800
C. America: 57-1-254-4444

South America: 55-11-2103-6000
Hong Kong: 852-2735-1628
Japan: 81-44-844-8013
UK: 44-208-420-8341

IDC Ribbon Cable

Product Facts

- **Compatible with a variety of Insulation Displacement Connectors**
- **Available on .025 [0.63], .0394 [1.00], .050 [1.27], .100 [2.54] and .156 [3.96] centerline**
- **Color code edge mark on conductor #1**
- **Gray flame retardant flexible PVC insulation**
- **Insulation rated for temperature of -20°C to +105°C**
- **Recognized under the Component Program of Underwriters Laboratories Inc., File No. E53793**

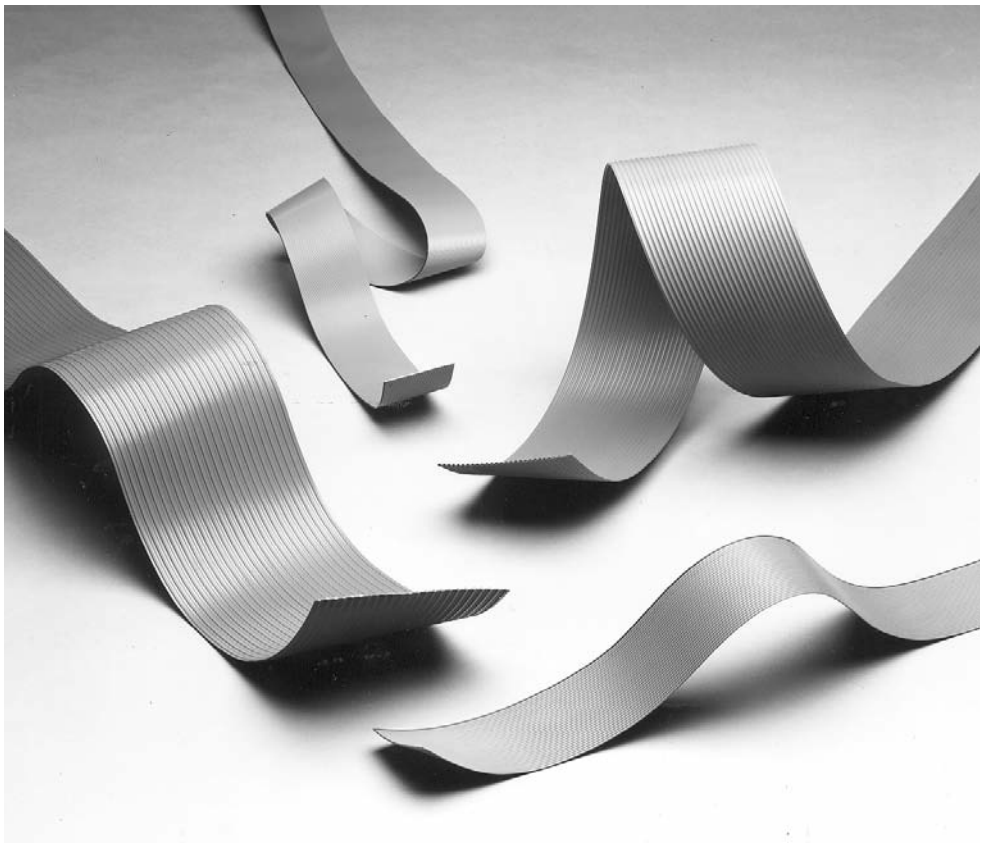

Tyco Electronics Corporation has an expanding array of MADISON CABLE planar PVC insulated product designed for compatibility with a variety of Insulation Displacement Connectors. AMP IDC terminations offer a quick, reliable, cost-effective cabling system which can be automated.

The .100 [2.54] centerline cable is available in 28 to 22 AWG, either as tinned or as overcoated tinned wire, in 2 to 28 conductors.

The .156 [3.96] centerline is available in 22 AWG and 18 AWG, either as tinned or overcoated tinned, in 2 to 24 conductors.

IDC Ribbon Cable is produced to tighter standards than usually required for high yield insulation displacement terminations. The extra precision offers uncomplicated operation in fully automatic stripping, notching and termination equipment.

.050 [1.27] Centerline, IDC Ribbon Cable

Product Specifications

Voltage Rating — 30 VAC

Component Recognized by UL to US and Canadian Standards — AWM Style 2651

Sizes —

26 AWG, 7/34 Tinned copper, PVC insulation (9 – 64 conductors), 500-ft reels (Base AMP Part Number 57034)

28 AWG, 7/36 Tinned copper, PVC insulation (9 – 64 conductors), 100-ft reels (Base AMP Part Number 57040) and 500-ft reels (Base AMP Part Number 971111)

30 AWG, Other conductor counts available on request. For ordering information, call Toll-Free: **1-877-623-4766** or visit: **http://www.madisoncable.com/fsproducts.htm**

Catalog 82056
Revised 6-08

www.tycoelectronics.com

Dimensions are in inches and millimeters unless otherwise specified. Values in brackets are metric equivalents.

Dimensions are shown for reference purposes only. Specifications subject to change.

USA: 1-800-522-6752
Canada: 1-905-470-4425
Mexico: 52-55-1106-0800
C. America: 57-1-254-4444

South America: 55-11-2103-6000
Hong Kong: 852-2735-1628
Japan: 81-44-844-8013
UK: 44-208-420-8341

.100 [2.54] Centerline, IDC Ribbon Cable, PVC Insulation

Product Specifications

Voltage Rating — 300 Volts

UL Recognized — AWM Style 2651

CSA — Available on request

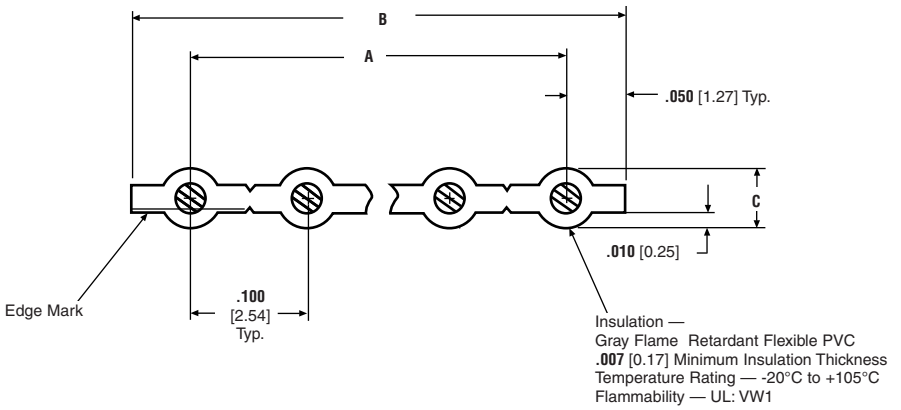

No. of Conductors	Dimensions A	B	C	Part Number
28 AWG 7/32 Tinned Copper				
2	0.100 [2.54]	0.200 [5.08]	0.044 [1.12]	02WFY00006P
5	0.400 [10.16]	0.500 [12.70]	0.044 [1.12]	05WFY00006P
10	0.900 [22.86]	1.000 [25.40]	0.044 [1.12]	10WFY00006P
15	1.400 [35.56]	1.500 [38.10]	0.044 [1.12]	15WFY00006P
20	1.900 [48.26]	2.000 [50.80]	0.044 [1.12]	20WFY00006P
25	2.400 [60.96]	2.500 [63.50]	0.044 [1.12]	25WFY00006P
28	2.700 [68.58]	2.800 [71.12]	0.044 [1.12]	28WFY00006P
26 AWG 7/34 Tinned Copper				
2	0.100 [2.54]	0.200 [6.08]	0.039 [.99]	02WEY00008P
5	0.400 [10.16]	0.500 [12.70]	0.039 [.99]	05WEY00004P
10	0.900 [22.86]	1.000 [25.40]	0.039 [.99]	10WEY00012P
15	1.400 [35.56]	1.500 [38.10]	0.039 [.99]	15WEY00002P
20	1.900 [48.26]	2.000 [50.80]	0.039 [.99]	20WEY00008P
25	2.400 [60.96]	2.500 [63.50]	0.039 [.99]	25WEY00008P
28	2.700 [68.58]	2.800 [71.12]	0.039 [.99]	28WEY00008P
26 AWG 7/34 Overcoated Tinned Copper				
2	0.100 [2.54]	0.200 [5.08]	0.039 [.99]	02WEY00007P
5	0.400 [10.16]	0.500 [12.70]	0.039 [.99]	05WEY00007P
10	0.900 [22.86]	1.000 [25.40]	0.039 [.99]	10WEY00007P
15	1.400 [35.56]	1.500 [38.10]	0.039 [.99]	15WEY00007P
20	1.900 [48.26]	2.000 [50.80]	0.039 [.99]	20WEY00007P
25	2.400 [60.96]	2.500 [63.50]	0.039 [.99]	25WEY00007P
28	2.700 [68.58]	2.800 [71.12]	0.039 [.99]	28WEY00007P

No. of Conductors	Dimensions A	B	C	Part Number
24 AWG 7/32 Overcoated Tinned Copper				
2	0.100 [2.54]	0.200 [5.08]	0.044 [1.12]	02WFY00007P
5	0.400 [10.16]	0.500 [12.70]	0.044 [1.12]	05WFY00007P
10	0.900 [22.86]	1.000 [25.40]	0.044 [1.12]	10WFY00007P
15	1.400 [35.56]	1.500 [38.10]	0.044 [1.12]	15WFY00007P
20	1.900 [48.26]	2.000 [50.80]	0.044 [1.12]	20WFY00007P
25	2.400 [60.96]	2.500 [63.50]	0.044 [1.12]	25WFY00007P
28	2.700 [68.58]	2.800 [71.12]	0.044 [1.12]	28WFY00007P
22 AWG 7/30 Tinned Copper				
2	0.100 [2.54]	0.200 [5.08]	0.051 [1.30]	02WGY00001P
5	0.400 [10.16]	0.500 [12.70]	0.051 [1.30]	05WGY00006P
10	0.900 [22.86[	1.000 [25.40]	0.051 [1.30]	10WGY00002P
15	1.400 [35.56]	1.500 [38.10]	0.051 [1.30]	15WGY00006P
20	1.900 [48.26]	2.000 [50.80]	0.051 [1.30]	20WGY00006P
25	2.400 [60.96]	2.500 [63.50]	0.051 [1.30]	25WGY00006P
28	2.700 [68.58]	2.800 [71.12]	0.051 [1.30]	28WGY00006P

Other Conductor Counts Available on Request.

Contact MADISON CABLE **(**1-877-MADISON**), a Division of Tyco Electronics Corporation, for engineering questions or for order placement of this cable.**

Catalog 82056
Revised 6-08

www.tycoelectronics.com

Dimensions are in inches and millimeters unless otherwise specified. Values in brackets are metric equivalents.

Dimensions are shown for reference purposes only. Specifications subject to change.

USA: 1-800-522-6752
Canada: 1-905-470-4425
Mexico: 52-55-1106-0800
C. America: 57-1-254-4444

South America: 55-11-2103-6000
Hong Kong: 852-2735-1628
Japan: 81-44-844-8013
UK: 44-208-420-8341

.156 [3.96] Centerline, Flat Ribbon Cable, PVC Insulation

Product Specifications

Voltage Rating — 300 Volts
UL Recognized — AWM Style 2651
CSA — Available on request

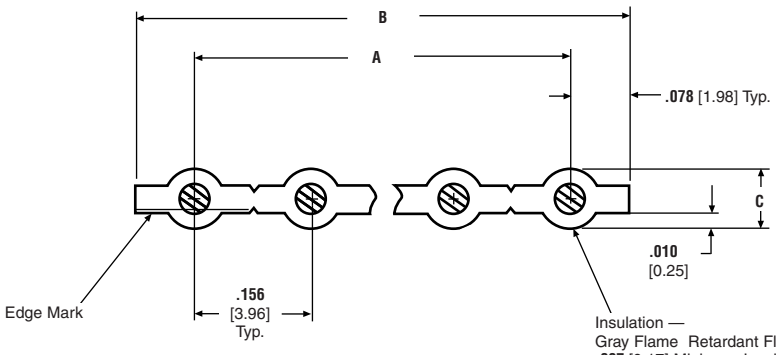

No. of Conductors	Dimensions			Part Number
	A	B	C	
22 AWG 7/30 Tinned Copper				
2	0.156 [3.96]	0.312 [7.92]	0.051 [1.30]	02WGY00008P
5	0.624 [15.85]	0.780 [19.81]	0.051 [1.30]	05WGY00008P
10	1.404 [35.66]	1.560 [39.62]	0.051 [1.30]	10WGY00008P
15	2.184 [55.47]	2.340 [59.44]	0.051 [1.30]	15WGY00008P
20	2.964 [75.29]	3.120 [79.25]	0.051 [1.30]	20WGY00008P
24	3.588 [91.14]	3.744 [95.10]	0.051 [1.30]	24WGY00008P
18 AWG 7/26 Tinned Copper				
2	0.156 [3.96]	0.312 [7.92]	0.068 [1.73]	02WJY000001P
5	0.624 [15.85]	0.780 [19.81]	0.068 [1.73]	05WJY000010P
10	1.404 [35.66]	1.560 [39.62]	0.068 [1.73]	10WJY000010P
15	2.184 [55.47]	2.340 [59.44]	0.068 [1.73]	15WJY000010P
20	2.964 [75.29]	3.120 [79.25]	0.068 [1.73]	20WJY000010P
24	3.588 [91.14]	3.744 [95.10]	0.068 [1.73]	24WJY000010P

Other Conductor Counts Available on Request.

Contact MADISON CABLE (1-877-MADISON**), a Division of Tyco Electronics Corporation, for engineering questions or for order placement of this cable.**

Catalog 82056
Revised 6-08

www.tycoelectronics.com

Dimensions are in inches and millimeters unless otherwise specified. Values in brackets are metric equivalents.

Dimensions are shown for reference purposes only. Specifications subject to change.

USA: 1-800-522-6752
Canada: 1-905-470-4425
Mexico: 52-55-1106-0800
C. America: 57-1-254-4444

South America: 55-11-2103-6000
Hong Kong: 852-2735-1628
Japan: 81-44-844-8013
UK: 44-208-420-8341

Prepared IDC Ribbon Cable

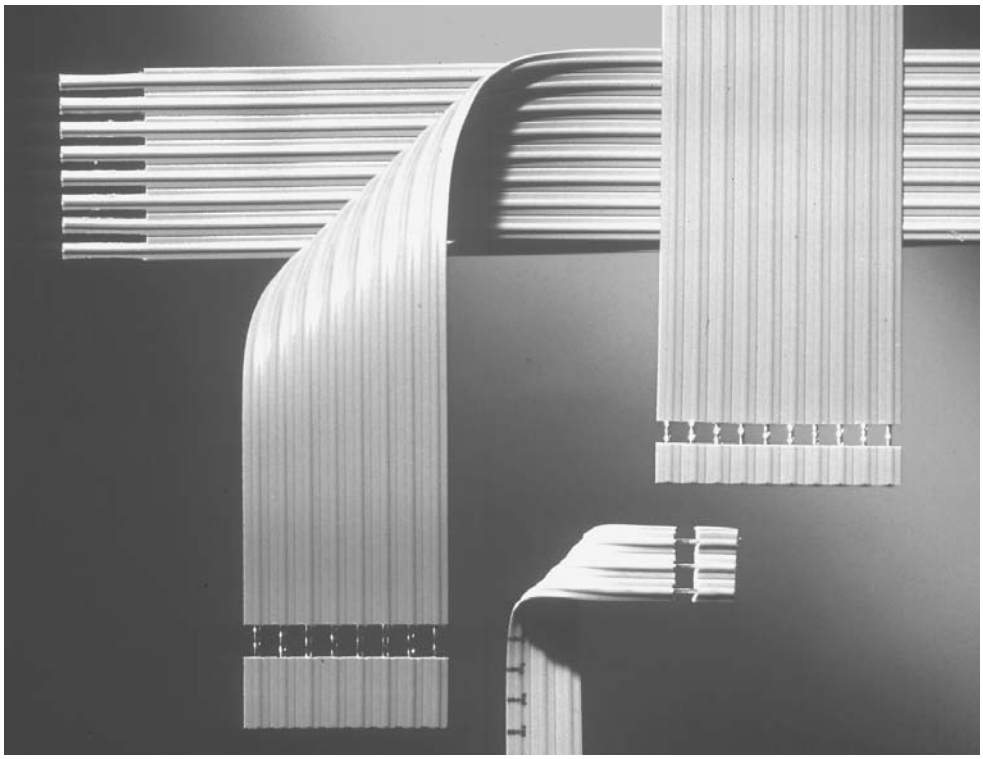

In addition to bulk cable, the US Engineering Cable Assembly Group offers Prepared Cable for the .100 [2.54] and .156 [3.96] centerline cables. This can be in the form of prenotched cable on reels or cut-to-length cable segments.

Prenotched 250 foot reels of cable can be produced with notches at varying increments or repeating all along the cable. The maximum width of these cables is 20 conductor for the .100 [2.54] centerline and 13 conductor for the .156 [3.96] centerline.

Prepared Cable is also available with a Strip and Retain feature allowing the cable assembly to be soldered directly to the PC Board. This saves space and cost and reduces spare parts inventory. Strip and Retain on both ends is used in family board applications to maintain the electrical connection when the PC Board is separated into smaller boards after soldering. Widths are limited to 20 conductors for the .100 [2.54] centerline and 13 conductors for the .156 [3.96] centerline. However, multiple cables can be placed side-by-side in a single connector. For other styles and configurations contact the product engineer or product manager.

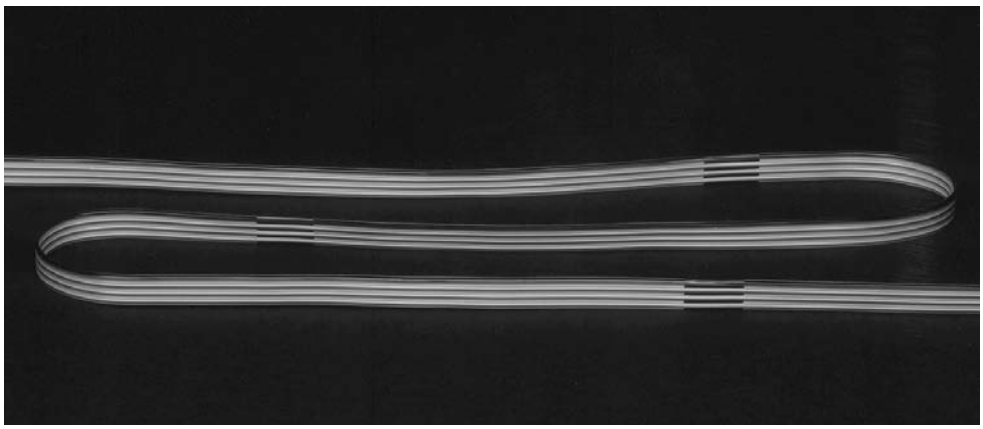

Catalog 82056
Revised 6-08

www.tycoelectronics.com

Dimensions are in inches and millimeters unless otherwise specified. Values in brackets are metric equivalents.

Dimensions are shown for reference purposes only. Specifications subject to change.

USA: 1-800-522-6752
Canada: 1-905-470-4425
Mexico: 52-55-1106-0800
C. America: 57-1-254-4444

South America: 55-11-2103-6000
Hong Kong: 852-2735-1628
Japan: 81-44-844-8013
UK: 44-208-420-8341

MTA Wire Termination Flowchart

Choose the appropriate MTA Connector from the MTA Catalog 82056.

↓

Select the proper wire style and AWG for the chosen MTA Connector (Refer to pages 70-74).

↓

Choose the MTA Termination Tooling (Refer to pages 76-79).

↓

Terminate the Wire-to-MTA Connector per Application Tooling Instruction Sheet.

↓

Inspect the MTA Wire Termination per Application Specification, especially the wire depth. See illustrations: 114-13072 — MTA-50 Connectors, 114-1019 — MTA-100 Connectors, 114-1020 — MTA-156 Connectors, Posted Connector, Card Edge, 114-1048 — MTA-156 Quad Connectors, 114-1031 — MTA-100 Ribbon Cable Connector Assembly, and 114-1032 — MTA-156 Ribbon Cable Connector Assembly.

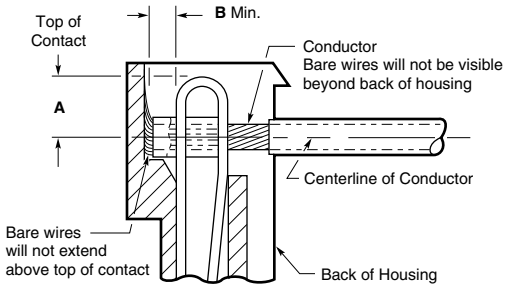

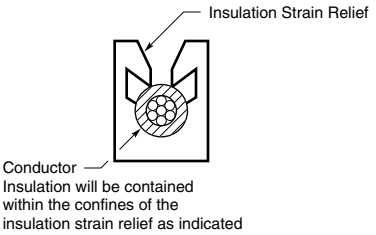

Connector	A	B
MTA-100	**.069–.087** [1.75-2.21]	**.040** [1.02]
MTA-156	**.090–.113** [2.29-2.87]	**.060** [1.52]

↓

Adjust the Termination Tooling (if needed) per Tooling Instruction Sheet (repeat the step above).

Catalog 82056
Revised 6-08

www.tycoelectronics.com

Dimensions are in inches and millimeters unless otherwise specified. Values in brackets are metric equivalents.

Dimensions are shown for reference purposes only. Specifications subject to change.

USA: 1-800-522-6752
Canada: 1-905-470-4425
Mexico: 52-55-1106-0800
C. America: 57-1-254-4444

South America: 55-11-2103-6000
Hong Kong: 852-2735-1628
Japan: 81-44-844-8013
UK: 44-208-420-8341

MTA Application Tooling Options

One-At-A-Time Termination Tooling Part Numbers

Note: Max. Insulation Outside Diameter Wire:
.060 [1.52] for MTA-100 Connectors/.095 [2.41] for MTA-156 Connectors

MTA Connector Assembly		Interchangeable Head: Manual Hand Tool 58074-1, Air Hand Tool 58075-1, Air Bench Mount Tool 58338-1, Electric Bench Machine 931800-1	Interchangeable Head and Loose-Piece Feed Track: Air Bench Mount Tool 58338-1, Electric Bench Machine 931800-1	Interchangeable Head and Tape Feed Track: Air Bench Mount Tool 58338-1, Electric Bench Machine 931800-1	Special Applicator	T-Handle✓ Maintenance Tool
MTA-50	Closed End	1583503-1	—	—	—	—
	Feed Thru					
MTA-100 Connector	Closed End	58246-1 (Standard)*	933567-1	853546-1 & 853542-1 (Base)	466728-1	59803-1
		58246-2 (Ext Wear)				
		58246-3 (Ribbon Cable)				
	Feed Thru	58442-1	—	—	—	59803-1
	Posted (Closed-End)	58638-1	—	—	—	59803-1
MTA-156 Connector	Closed End	58247-1 (Standard)**	933568-1	853547-1 & 853542-1 (Base)	466727-1	59804-1
		58247-2 (Ext Wear)				
		58247-3 (Ribbon Cable)				
	Feed Thru	58443-1	—	—	—	59804-1
	Posted (Closed-End)	58082-1	—	—	—	59804-1
MTA-156 Card-Edge	Closed End	58061-1	—	—	567020-1	59839-1
MTA-156 Quad	Closed End	58392-1	—	—	—	59804-1

*Repair Kit 856600-1 **Repair Kit 856600-2

Notes:
1. A repair kit consists of a cam, a feed-slide sub-assembly and a locating pawl. Repair kits can be made available for other interchangeable heads. Consult Tyco Electronics.
2. Standard modular heads 58246-1 and 58247-1 are recommended for low volume use.
3. Extended wear modular heads 58246-2 and 58247-2 are recommended for high volume use.
4. T-Handle Maintenance Tools are for maintenance (field) use only. They are not recommended for production.
5. Some Manual Hand Tool Assemblies are available:
   a. Order 58579-1, comprised of Head 58246-1 with Manual Hand Tool 58074-1.
   b. Order 58580-1, comprised of Head 58247-1 with Manual Hand Tool 58074-1.
   c. Order 58639-1, comprised of Head 58638-1 with Manual Hand Tool 58074-1.

MTA-50 Mass Termination Tooling Part Numbers

Manual Arbor Frame (with slide)
Part Number 1583518-1*

Upper Tooling
Part Number 1583514-1*

Fixture, Discrete Wire, Closed End
Part Number 1583515-1 (28-26 AWG)
Part Number 1583515-2 (30-28 AWG)

Fixture, Discrete Wire, Feed-Thru
Part Number 1583516-1 (28-26 AWG)
Part Number 1583516-2 (30-28 AWG)

Fixture, Ribbon Cable, Closed End or Feed-Thru
Part Number 1583517-1

*Required, plus appropriate Fixture(s).

MTA-100 and MTA-156 Mass Termination Tooling Part Numbers

Note: Max. Insulation Outside Diameter Wire:
.050 [1.27] for MTA-100 Connectors/.070 [1.78] for MTA-156 Connectors

MTA Connector Assembly		Interchangeable Head: Part Number	Interchangeable Head: Used With	Harness Board Holding Fixture: Part Number	Harness Board Holding Fixture: Used With: Applicator Assembly	Harness Board Holding Fixture: Used With: Tooling Assembly	Interchangeable Head and Tape Feed Track: Part Number	Interchangeable Head and Tape Feed Track: Used With
MTA-100 Connector	Closed End	—	—	58242-1	—	Manual Bench Tool 58024-1 and Tooling Assembly 58039-1	854175-1 & 854200-1 (Base)	312522-1
				58242-3	58575-1			
	Feed Thru	58644-1 (Discrete Wire)† 58644-2 (Notched Cable)†	58074-1 (Man Hd Tl)	58243-1	—		—	—
				58243-3	58575-1			
	Closed End (Posted)	—	—	58635-1	58575-1		—	—
	Feed Thru (Posted)	—	—	58636-1	58575-1		—	—
MTA-156 Connector	Closed End	—	—	58244-1	—	Manual Bench Tool 58024-1 and Tooling Assembly 58040-1	854176-1 & 854200-1 (Base)	312522-1
				58244-3	58576-1			
	Feed Thru	58646-1 (Discrete Wire)†† 58646-2 (Notched Cable)††	58074-1 (Man Hd Tl)	58245-1	—		—	—
				58245-3	58576-1			
	Card Edge	—	—	59848-1	—		—	—
				59848-3	58576-1			
	Closed End (Posted)	—	—	58009-1	—		—	—
				58009-2	58576-1			
	Feed Thru (Posted)	—	—	58010-2	58576-1		—	—
MTA-156 Quad	Closed End	—	—	58244-1	—	Manual Bench Tool 58024-1 and Tooling Assy 58040-1	—	—
				58244-3	58576-1			
	Feed Thru	—	—	58245-1	—	58024-1 and Tooling Assy 58040-1	—	—
				58245-3	58576-1			

†2- through 12-positions. ††2- through 8-positions.

Application Tooling

Catalog 82056
Revised 6-08

www.tycoelectronics.com

Dimensions are in inches and millimeters unless otherwise specified. Values in brackets are metric equivalents.

Dimensions are shown for reference purposes only. Specifications subject to change.

USA: 1-800-522-6752
Canada: 1-905-470-4425
Mexico: 52-55-1106-0800
C. America: 57-1-254-4444

South America: 55-11-2103-6000
Hong Kong: 852-2735-1628
Japan: 81-44-844-8013
UK: 44-208-420-8341

MTA Application Tooling Options (Continued)

One-At-A-Time Termination Tooling (Typical Tooling Combinations)

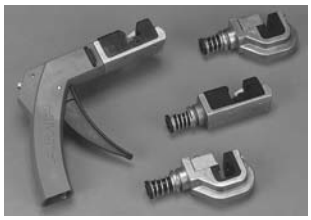

Manual Hand Tool with Interchangeable Head

Air Hand Tool with Interchangeable Head

Air Bench Mount Tool with Interchangeable Head and Foot Switch

Electric Bench Machine with Interchangeable Head

Power Units

Manual Hand Tool — Pistol Grip Handle Part No. 58074-1

- Easy to use
- Ratchet control will not release the trigger until it is fully bottomed
- Head may be rotated for user convenience

Air Hand Tool — Pistol Grip Pneumatic Handle Part No. 58075-1

- Light weight
- Operates at air pressure between 40 and 70 psi [2.76 and 4.83 bar]
- Head may be rotated for user convenience

Air Bench Mount Tool — Bench Mount Power Assembly Part No. 58338-1

- May be mounted with interchangeable head pointed up or down
- Operated by a foot switch
- Operates at air pressure between 40 and 70 psi [2.76 and 4.83 bar]

Electric Bench Machine — IDC Power Unit Part No. 931800-1

- All electric: 120 VAC, 60 Hz, 2 A
- Compact, portable and quiet
- Operated by a foot switch

Air Bench Mount Tool with Interchangeable Head and Loose-Piece Feed Track

Electric Bench Machine with Interchangeable Head and Tape Feed Track

AMP-O-LECTRIC Bench Machine with Special Applicator

Interchangeable Heads and Applicators (Refer to page 76 for part numbers.)

Interchangeable Head

- Terminates one unstripped wire per cycle
- Aligns and holds the connector in place for each termination
- Automatically advances the connector after each termination

T-Handle Maintenance Tool

Interchangeable Head and Loose-Piece Feed Track

- No special setup required
- Connectors are easily loaded into feed track
- Connectors are fed using a simple spring-loaded pusher

Interchangeable Head and Tape Feed Track

- No special setup required
- Tape-mounted connectors are transferred from product reel to feed track by simply pulling on the free end of the carrier tape
- Connectors are fed using a simple spring-loaded pusher

Special Applicator

- Connectors are easily hand loaded into feed track
- Automatically advances the connector after each termination
- Cannot be cycled until the connector is properly positioned

Catalog 82056
Revised 6-08

www.tycoelectronics.com

Dimensions are in inches and millimeters unless otherwise specified. Values in brackets are metric equivalents.

Dimensions are shown for reference purposes only. Specifications subject to change.

USA: 1-800-522-6752
Canada: 1-905-470-4425
Mexico: 52-55-1106-0800
C. America: 57-1-254-4444

South America: 55-11-2103-6000
Hong Kong: 852-2735-1628
Japan: 81-44-844-8013
UK: 44-208-420-8341

MTA Application Tooling Options (Continued)

Mass Termination Tooling (Typical Tooling Combinations)

Manual Bench Tool with Applicator and Holding Fixture

Air Harness Tool with Applicator

Air Bench Machine

2700 lb Air Bench Machine with Ribbon Cable Notcher Assembly

Power Units

Manual Bench Tool — Arbor Frame Assembly Part No. 58024-1

- Applicator and holding fixture can be oriented for operator convenience for closed-end or feed-thru terminations
- Ram height (insertion depth) is easily adjusted
- May be bench mounted

Air Harness Tools — Hand-Held Power Unit with Applicator Part No. 58575-1 (MTA-100) Part No. 58576-1 (MTA-156)

- Applicator can be rotated 360° for orientation with holding fixture
- Insertion depth is easily adjusted
- Operates at air pressure between 75 and 95 psi [5.17 and 6.55 bar]

Air Bench Machine — Pneumatic Unit Part No. 91112-2

- Operated by a foot switch
- Operates at air pressure between 80 and 90 psi [5.52 and 6.21 bar]
- Not recommended for notching cable with more than 14 conductors

2700 lb Air Bench Machine — Part No. 312522-1

- Operated by a foot switch
- Capable of exerting 2,700 lb [12,000 N] of force at minimum 80 psi [5.52 bar] air pressure
- May be bench mounted

Applicators and Notcher Assemblies

Manual Bench Tool with Applicator and Tape Feed Track

Applicator and Holding Fixture

- Wires are laced into plastic combs for mass termination
- Trims excess wire for closed-end terminations
- Holding fixture may be mounted to a harness board

Applicator and Tape Feed Track

- Tape-mounted connectors are transferred from product reel to feed track by simply pulling on the free end of the carrier tape
- Connectors are fed using a simple spring-loaded pusher
- Feed stop easily adjusted for different connector sizes

Ribbon Cable Notcher Assembly

- Notch cable with up to 28 conductors for .100 centerline, and 24 conductors for .156 centerline
- Pressure plate holds cable in position during notching
- Scrap conveniently removed through a chute with a blast of air from a built-in air valve

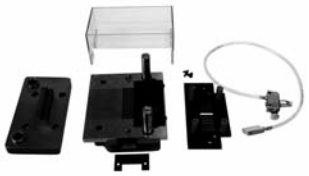

Ribbon Cable Notcher Assembly

Part Number	Wire Size AWG	Centerline	Used With
854449-2	26-28	**.100** 2.54	Manual Bench Tool 58024-1
854449-4	22-28	**.100** 2.54	Air Bench Machine 91112-2
854449-3	18-24	**.156** 3.96	2700 lb Bench Machine 312522-1 AMP-O-LECTRIC Bench Machine 1-471273-3 (with Conversion Kit 690675-2)

Use Adapter 854468-1 when putting Notcher in the AMP-O-LECTRIC Machine. Use Adapter 854468-2 when putting Notcher in the 2700 lb Air Bench Machine.

Application Tooling

Catalog 82056
Revised 6-08

www.tycoelectronics.com

Dimensions are in inches and millimeters unless otherwise specified. Values in brackets are metric equivalents.

Dimensions are shown for reference purposes only. Specifications subject to change.

USA: 1-800-522-6752
Canada: 1-905-470-4425
Mexico: 52-55-1106-0800
C. America: 57-1-254-4444

South America: 55-11-2103-6000
Hong Kong: 852-2735-1628
Japan: 81-44-844-8013
UK: 44-208-420-8341

MTA Application Tooling Options (Continued)

Technical Documents

The following is a list of technical documents covering the installation, operation, adjustment, maintenance and repair of MTA application tooling.

Instruction Sheets (IS) provide instructions for assembling or applying the product. They are intended for the Manufacturing Assembler or Operator.

Customer Manuals (CM) provide complete, detailed instructions on the installation, operation, adjustment, maintenance and repair of complex tools and application machines.

Applicator Instructions (AI) are similar to instruction sheets (which cover products and tools), and provide instructions for installation, adjustment and maintenance of applicators used in automatic and semiautomatic machines.

Hand Tools, Power Units & Accessories

Manual Arbor Frame (MTA-50)	1583518-1	IS 408-8812	2700 lb Air Bench Machine	312522-1	CM 409-5843
Upper Tooling (MTA-50)	1583514-1	IS 408-8812	Terminator Assembly, "G" Term	354500-1	CM 409-5842
Manual Arbor Frame Assembly	58024-1	IS 408-6923	AMP-O-LECTRIC Bench Machine	1-471273-3	CM 409-5128
Ribbon Cable Applicator, .100	58039-1	IS 408-6685	Conversion Kit	690675-2	IS 408-8022
Ribbon Cable Applicator, .156	58040-1	IS 408-6701	Base Assembly	853542-1	IS 408-9636
Manual Hand Tool	58074-1	IS 408-6790	Base	854200-1	IS 408-9650
Air Bench Mount Tool	58338-1	IS 408-9393	Adapter (AMP-O-LECTRIC)	854468-1	IS 408-9687
Air Hand Tool (MTA-100)	58575-1	IS 408-4260	Adapter (2700 lb Machine)	854468-2	IS 408-9687
Air Harness Tool (MTA-156)	58576-1	IS 408-4260	Repair Kit	856600-1	IS 408-9745
T-Handle Maintenance Tool (MTA-100)	59803-1	IS 408-7907	Repair Kit	856600-2	IS 408-9745
T-Handle Maintenance Tool (MTA-156)	59804-1	IS 408-7907	Electric Bench Mount Tool	931800-1	CM 409-5746
Air Arbor Frame Assembly	91112-2	IS 408-7763			

One-At-A-Time Termination Tooling

Interchangeable Heads

MTA-50		MTA-156	
1583503-1	IS 408-8801	58247-1	IS 408-6930
MTA-100		58247-2	IS 408-9380
58246-1	IS 408-6929	58247-3	IS 408-4146
58246-2	IS 408-9379	58443-1	IS 408-9607
58246-3	IS 408-4147	58061-1	IS 408-6794
58442-1	IS 408-9603	58082-1	IS 408-6795
58638-1	IS 408-4358	58392-1	IS 408-9450

Interchangeable Head & Loose Piece Feed Track

MTA-100		MTA-156	
933567-1	IS 408-9435	933568-1	IS 408-9466

Interchangeable Heads & Tape Feed Track

MTA-100		MTA-156	
853546-1	IS 408-9636	853547-1	IS 408-9637

Special Applicators

MTA-100		MTA-156	
466728-1	AI 408-8054	466727-1	AI 408-8054
		567020-1	AI 408-8069

Mass Termination Tooling

MTA-50		MTA-100		MTA-156		Die Set Assembly MTA-100	
1583515-1	IS 408-8812	58242-1	IS 408-7994	58009-1	IS 408-7995	854175-1	IS 408-9667
1583515-2	IS 408-8812	58242-3	IS 408-7994	58009-2	IS 408-7995	**Die Set Assembly MTA-156**	
1583516-1	IS 408-8812	58243-1	IS 408-7994	58010-2	IS 408-7995	854176-1	IS 408-9650
1583516-2	IS 408-8812	58635-1	IS 408-7994	58244-1	IS 408-7995		
1583517-1	IS 408-8812	58636-1	IS 408-7994	58244-3	IS 408-7995		
		58644-1	IS 408-4406	58245-1	IS 408-7995		
		58644-2	IS 408-4440	58245-3	IS 408-7995		
		59844-1	IS 408-7994	58646-1	IS 408-4405		
		59845-1	IS 408-7994	58646-2	IS 408-4439		
		59845-3	IS 408-7994	59848-1	IS 408-7995		
				59848-3	IS 408-7995		

Typical Application Rates

Produce 6-in. [15 cm] Long Jumpers, One 4-Position MTA-100 Connector per End, Discrete Wire

Method	Terminations Per Hour
Manual Hand Tool 58074-1 with Interchangeable Head 58246-1	—
Electric Bench Machine 931800-1 with Interchangeable Head 58246-1	900
Electric Bench Machine 931800-1 with Interchangeable Head and Loose-Piece Feed Track 933567-1	1,100
Electric Bench Machine 931800-1 with Interchangeable Head and Tape Feed Track 853546-1 and 853542-1 (Base)	1,250

Apply One 4-Position MTA-100 Feed-Thru Connector per Assembly, Discrete Wire

Method	Terminations Per Hour
Manual Bench Tool 58024-1 with Applicator and Holding Fixture	650

For further information about tooling call Technical Support.

Produce 6-in. [15 cm] Long Jumpers, One 4-Position MTA-100 Connector per End, Ribbon Cable*

Method	Terminations Per Hour
2700 lb Air Bench Machine 312522-1 with Applicator and Tape Feed Track 854175-1 and 854200-1 (Base)	7,500

* Procedure: Mass terminate 12-conductor ribbon cable with three connectors per end. After terminating, separate by tearing the 12-conductor assembly into three 4-conductor assemblies.

Cable Notching

Method	Cable Ends Per Hour
2700 lb Air Bench Machine 312522-1 with Ribbon Cable Notcher Assembly 854449-2 and 854468-2 (Adapter)	1,000

Catalog 82056
Revised 6-08

www.tycoelectronics.com

Dimensions are in inches and millimeters unless otherwise specified. Values in brackets are metric equivalents.

Dimensions are shown for reference purposes only. Specifications subject to change.

USA: 1-800-522-6752
Canada: 1-905-470-4425
Mexico: 52-55-1106-0800
C. America: 57-1-254-4444

South America: 55-11-2103-6000
Hong Kong: 852-2735-1628
Japan: 81-44-844-8013
UK: 44-208-420-8341

Part Number Index

Note: This index lists all cataloged parts by base no. only. Complete part nos. (with prefixes and/or suffixes) are shown on the page(s) indicated.

Part No.	Page
02WEY00007P	72
02WEY00008P	72
02WFY00006P	72
02WFY00007P	72
02WGY00001P	72
02WGY00008P	73
02WJY000001P	73
05WEY00004P	72
05WEY00007P	72
05WFY00006P	72
05WFY00007P	72
05WGY00006P	72
05WGY00008P	73
05WJY000010P	73
10WEY00007P	72
10WEY00012P	72
10WFY00006P	72
10WFY00007P	72
10WGY00002P	72
10WGY00008P	73
10WJY000010P	73
15WEY00002P	72
15WEY00007P	72
15WFY00006P	72
15WFY00007P	72
15WGY00006P	72
15WGY00008P	73
15WJY000010P	73
20WEY00007P	72
20WEY00008P	72
20WFY00006P	72
20WFY00007P	72
20WGY00006P	72
20WGY00008P	73
20WJY000010P	73
24WGY00008P	73
24WJY000010P	73
25WEY00007P	72
25WEY00008P	72
25WFY00006P	72
25WFY00007P	72
25WGY00006P	72
28WEY00007P	72
28WEY00008P	72
28WFY00006P	72
28WFY00007P	72
28WGY00006P	72
57034	71
57040	71
350980	59, 60
640250	60
640251	60
640252	59, 60
640383	46
640384	46
640385	47
640387	49
640388	48
640389	49
640426	37
640427	37
640428	37
640429	37
640430	37
640431	37
640432	37
640433	37
640434	37
640435	37
640440	15
640441	15
640442	15
640443	15
640445	48
640452	21
640453	21
640454	23
640455	23
640456	24
640457	24
640468	15
640469	15
640470	15
640471	15
640472	37
640473	37
640474	37
640475	37
640476	37
640477	37
640478	37
640479	37
640480	37
640481	37
640550	16
640551	40
640556	41
640557	41
640558	41
640559	41
640595	39
640599	39
640600	39
640601	39
640602	39
640604	39
640605	39
640606	39
640607	39
640608	39
640620	15
640621	15
640622	15
640623	15
640629	42
640630	42
640631	41
640632	41
640633	41
640634	41
640635	41
640636	17
640637	17
640638	17
640639	17
640642	16
640643	40
640706	59
640707	59
640708	17
640709	17
640859	56
640860	56
640861	56
640862	56
640863	56
640864	56
640865	56
640866	56
640867	56
640868	56
641101	57
641106	57
641113	46
641114	46
641115	47
641118	49
641119	48
641120	48
641121	49
641122	21
641123	21
641124	23
641125	23
641126	24
641127	24
641143	41
641144	41
641145	41
641146	41
641147	41
641148	37
641149	37
641150	37
641151	37
641152	37
641153	37
641154	37
641155	37
641156	37
641157	37
641168	39
641169	39
641170	39
641171	39
641172	39
641173	39
641174	39
641175	39
641176	39
641177	39
641186	17
641187	17
641188	17
641189	17
641190	15
641191	15
641192	15
641193	15
641198	15
641199	15
641200	15
641201	15
641202	46
641203	46
641204	47
641207	49
641208	48
641209	48
641210	49
641211	21
641212	21
641213	23
641214	23
641215	24
641216	24
641217	37
641218	37
641219	37
641220	37
641221	37
641222	37
641223	37
641224	37
641225	37
641226	37
641227	39
641228	39
641229	39
641230	39
641231	39
641232	39
641233	39
641234	39
641235	39
641236	39
641237	15
641238	15
641239	15
641240	15
641241	15
641242	15
641243	15
641244	15
641283	56
641284	56
641285	56
641286	56
641287	56
641288	56
641289	56
641290	56
641291	56
641292	56

Catalog 82056
Revised 6-08

www.tycoelectronics.com

Dimensions are in inches and millimeters unless otherwise specified. Values in brackets are metric equivalents.

Dimensions are shown for reference purposes only. Specifications subject to change.

USA: 1-800-522-6752
Canada: 1-905-470-4425
Mexico: 52-55-1106-0800
C. America: 57-1-254-4444

South America: 55-11-2103-6000
Hong Kong: 852-2735-1628
Japan: 81-44-844-8013
UK: 44-208-420-8341

Part Number Index (Continued)

Part No.	Page
641293	57
641301	39
641302	39
641303	39
641304	39
641305	39
641306	39
641307	39
641308	39
641309	39
641310	39
641311	15
641312	15
641313	15
641314	15
641425	45
641426	45
641427	45
641428	45
641429	45
641435	45
641436	45
641437	45
641438	45
641439	45
641440	42
641522	45
641523	45
641524	45
641525	45
641526	45
641533	42
641534	15
641535	15
641536	15
641537	15
641550	59
641623	42
641643	17
641644	17
641645	17
641646	17
641653	15
641654	15
641655	15
641656	15
641994	17
643067	40
643071	40
643075	16
643077	16
643498	15
643813	15
643814	15
643815	15
643816	15
643817	37
643818	37
643819	37
643820	37
643821	37
643828	15

Part No.	Page
643995	45
644020	15
644038	15
644040	15
644042	15
644043	15
644044	15
644082	37
644083	15
644284	37
644312	15
644313	15
644329	55
644370	55
644371	55
644375	55
644376	55
644377	55
644381	55
644382	55
644383	55
644387	55
644388	55
644389	55
644456	22
644457	22
644460	37
644461	37
644462	37
644463	37
644464	37
644465	39
644466	39
644467	39
644468	39
644469	39
644470	39
644471	39
644472	39
644486	30
644487	30
644488	30
644489	30
644497	15
644501	37
644502	37
644508	55
644509	55
644510	55
644511	15
644512	15
644513	15
644514	15
644540	15
644563	15
644564	15
644565	15
644566	37
644567	39
644569	39
644570	39
644572	39

Part No.	Page
644574	15
644575	15
644576	15
644577	15
644578	15
644579	15
644611	50
644612	50
644613	51
644614	51
644615	50
644616	50
644617	51
644627	50
644628	50
644629	51
644630	51
644631	50
644632	50
644633	51
644662	37
644663	37
644687	37
644694	22
644695	22
644702	15
644718	39
644720	39
644726	15
644749	46
644750	46
644751	47
644752	48
644753	48
644754	49
644755	49
644756	46
644757	46
644758	47
644759	48
644760	48
644761	49
644762	49
644763	46
644764	46
644765	47
644766	48
644767	48
644768	49
644769	49
644783	37
644791	37
644795	15
644803	30
644807	45
644809	45
644812	45
644814	45
644860	37
644861	30
644874	24
644875	24

Part No.	Page
644876	23
644877	23
644878	37
644884	22
644885	22
644886	22
644887	22
644888	22
644889	22
644890	22
644891	22
644892	32
644893	32
644894	32
644896	32
644897	32
644898	32
647000	20
647001	20
647002	20
647003	20
647004	20
647005	20
647006	20
647007	20
647008	20
647009	20
647010	20
647011	20
647012	20
647013	20
647014	20
647015	20
647016	20
647017	20
647018	20
647019	20
647020	20
647021	20
647022	20
647023	20
647030	20
647031	20
647032	20
647033	20
647047	27
647048	27
647050	28
647051	28
647075	27
647076	27
647078	28
647079	28
647106	29
647107	29
647108	29
647109	27
647114	27
647116	28
647117	28
647123	53
647124	53

Catalog 82056
Revised 6-08

www.tycoelectronics.com

Dimensions are in inches and millimeters unless otherwise specified. Values in brackets are metric equivalents.

Dimensions are shown for reference purposes only. Specifications subject to change.

USA: 1-800-522-6752
Canada: 1-905-470-4425
Mexico: 52-55-1106-0800
C. America: 57-1-254-4444

South America: 55-11-2103-6000
Hong Kong: 852-2735-1628
Japan: 81-44-844-8013
UK: 44-208-420-8341

Part Number Index (Continued)

Part No.	Page
647125	53
647126	53
647127	53
647128	53
647131	53
647132	53
647133	53
647134	53
647135	53
647136	53
647139	53
647140	53
647141	53
647142	53
647143	53
647144	53
647166	29
647167	29
647168	29
647295	28
647296	28
647297	28
647298	27
647299	27
647300	27
647400	62
647401	62
647402	62
647406	62
647409	62
647466	62
647476	45
647477	15

Part No.	Page
647478	37
647479	39
647480	15
647481	45
647485	62
647496	39
647497	45
647609	25
647623	25
647624	25
647625	25
647626	25
647627	25
647628	26
647629	26
647630	26
647646	47
647648	52
647649	52
647651	26
647652	26
647653	26
647676	65
647689	65
647690	64
770258	59
770476	59, 60
770522	59
770849	60
770894	61
971111	71
1123721	64
1123722	64

Part No.	Page
1123723	65
1123724	68
1123823	69
1123824	69
1318300	65
1318301	68
1318831	69
1318912	64
1375819	31
1375820	31
1445120	9
1445121	10
1445123	9
1445124	10
1445125	9
1445126	10
1445169	9
1445170	9
1445171	9
1445172	10
1445173	10
1445174	10
1445336	31
1445341	7
1445342	7
1445343	7
1445344	7
1445345	7
1445346	7
1445347	7
1445348	7
1445349	7
1445350	7

Part No.	Page
1445351	7
1445352	7
1445353	7
1445354	7
1445355	7
1445356	7
1445357	7
1445358	7
1445359	5
1445360	5
1445361	5
1445362	5
1445363	5
1445364	5
1445365	5
1445366	5
1445367	5
1445368	5
1445369	5
1445370	5
1445371	5
1445372	5
1445373	5
1445374	5
1445375	5
1445376	5
1744017	48
1744020	15
1744036	67
1744037	67
1744048	67
1744055	66
1744056	66

Application Tooling Part Number Index

Part No.	Page
58009	76, 79
58010	76, 79
58024	76, 78, 79
58039	76, 79
58040	76, 79
58061	76, 79
58074	76, 77, 79
58075	76, 77
58082	76, 79
58242	76, 79
58243	76, 79
58244	76, 79
58245	76, 79
58246	76, 79
58247	76, 79
58338	76, 77, 79
58392	76, 79
58442	76, 79
58443	76, 79

Part No.	Page
58517	31
58575	76, 78, 79
58576	76, 78, 79
58579	76
58614	59
58635	76, 79
58636	76, 79
58638	76, 79
58639	76
58644	76, 79
58646	76, 79
59803	76, 79
59804	76, 79
59836	17
59837	41
59839	76
59845	79
59848	76, 79
90471	59

Part No.	Page
91112	78, 79
91579	64
312522	76, 78, 79
354500	79
466468	59
466727	76, 79
466728	76, 79
466747	17
466947	59
471273	78, 79
567020	76, 79
567373	31
567827	31
567828	59
567910	31
680211	59
690675	78, 79
853542	76, 79
853546	76, 79

Part No.	Page
853547	76, 79
854175	76, 79
854176	76, 79
854200	76, 79
854449	78
854468	78, 79
856600	76, 79
931800	76, 77, 79
933567	76, 79
933568	76, 79
1385286	64
1583503	76, 79
1583514	76, 79
1583515	76, 79
1583516	76, 79
1583517	76, 79
1583518	76, 79

Catalog 82056
Revised 6-08

www.tycoelectronics.com

Dimensions are in inches and millimeters unless otherwise specified. Values in brackets are metric equivalents.

Dimensions are shown for reference purposes only. Specifications subject to change.

USA: 1-800-522-6752
Canada: 1-905-470-4425
Mexico: 52-55-1106-0800
C. America: 57-1-254-4444

South America: 55-11-2103-6000
Hong Kong: 852-2735-1628
Japan: 81-44-844-8013
UK: 44-208-420-8341

Tyco Electronics

Global Contacts

Americas

Argentina – Buenos Aires
Phone: +54-11-4733-2200
Fax: +54-11-4733-2211

Brasil – São Paulo
Phone: +55-11-2103-6000
Fax: +55-11-2103-6030

Chile – Santiago
Phone: +56-2-345-0361
Fax: +56-2-223-1477

Canada – Toronto
Phone: +905-475-6222
Fax: +905-474-5520
Product Information Center:
Phone: +905-470-4425
Fax: +905-474-5525

Colombia – Bogota
Phone: +57-1-319-8959
Fax: +57-1-319-8960

Mexico – Mexico City
Phone: +52-55-1106-0800
+01-800-733-8926
Fax: +52-55-1106-0901

For Latin/South American Countries not shown
Phone: +54-11-4733-2015
Fax: +54-11-4733-2083

United States
Harrisburg, PA
Phone: +1-717-564-0100
Fax: +1-717-986-7575
Product Information Center:
Phone: +1-800-522-6752
Fax: +1-717-986-7575

Troy, MI
Phone: +1-248-273-3359
Fax: +1-248-273-3322

Asia/Pacific

Australia – Sydney
Phone: +61-2-9554-2600
Fax: +61-2-9502-2556
Product Information Center:
Phone: +61-2-9840-8200
Fax: +61-2-9634-6188

India – Bangalore
Phone: +91-80-285-40800
Fax: +91-80-285-40820

Indonesia – Jakarta
Phone: +65-6482-0311
Fax: +65-6482-1012

Japan – Kawasaki, Kanagawa
Phone: +81-44-844-8111
Fax: +81-44-812-3207
Product Information Center:
Phone: +81-44-844-8013
Fax: +81-44-812-3200

Korea – Seoul
Phone: +82-2-3415-4500
Fax: +82-2-3486-3810

Malaysia – Selangor
Phone: +60-3-7805-3055
Fax: +60-3-7805-3066

New Zealand – Auckland
Phone: +64-9-634-4580
Fax: +64-9-634-4586

Philippines – Makati City
Phone: +632-848-0171
Fax: +632-867-8661

People's Republic of China
Hong Kong
Phone: +852-2735-1628
Fax: +852-2735-0243

Shanghai
Phone: +86-21-2407-1588
Fax: +86-21-2407-1599

Singapore – Singapore
Phone: +65-6482-0311
Fax: +65-6482-1012

Taiwan – Taipei
Phone: +886-2-8768-2788
Fax: +886-2-8768-2268

Thailand – Bangkok
Phone: +66-2-955-0500
Fax: +66-2-955-0505

Vietnam – Ho Chi Minh City
Phone: +84-8-930-5546
Fax: +84-8-930-3443

Europe/Middle East/Africa

Austria – Vienna
Phone: +43-1-905-60-0
Fax: +43-1-905-60-1333
Product Information Center:
Phone: +43-1-905-60-1249
Fax: +43-1-905-60-1251

Belarus – Minsk
Phone: +375 17 237 47 94
Fax: +375 17 237 47 94

Belgium – Kessel-Lo
Phone: +32-16-352-300
Fax: +32-16-352-355

Bulgaria – Sofia
Phone: +359-2-971-2152
Fax: +359-2-971-2153

Czech Republic and Slovakia
Czech Republic – Kurim
Phone: +420-541-162-111
Fax: +420-541-162-223
Product Information Center:
Phone: +420-541-162-113
Fax: +420-541-162-132

Denmark – Glostrup
Phone: +45-43-48-04-00
Fax: +45-43-44-14-14

Egypt – Cairo
Phone: +202-419-2334
Fax: +202-417-7647

Estonia – Tartu
Phone: +372-5138-274
Fax: +372-7400-779

Finland – Helsinki
Phone: +358-95-12-34-20
Fax: +358-95-12-34-250

France – Cergy-Pontoise Cedex
Phone: +33-1-3420-8888
Fax: +33-1-3420-8600
Product Information Center:
Phone: +33-1-3420-8686
Fax: +33-1-3420-8623

France Export Divisions –
Cergy-Pontoise Cedex
Phone: +33-1-3420-8804
Fax: +33-1-3420-8699

Germany – Bensheim
Phone: +49-6251-133-0
Fax: +49-6251-133-1600
Product Information Center:
Phone: +49-6251-133-1999
Fax: +49-6251-133-1988

Greece – Athens
Phone: +30-210-9370-396/397
Fax: +30-210-9370-655

Hungary – Budapest
Phone: +36-1-289-1000
Fax: +36-1-289-1010
Product Information Center:
Phone: +36-1-289-1016
Fax: +36-1-289-1017

Ireland – Dublin
Phone: +353-1-866-5612
Fax: +353-1-866-5714

Israel – Petach-Tikva
Phone: +972-3-929-0999
Fax: +972-3-919-1088

Italy – Collegno (Torino)
Phone: +39-011-4012-111
Fax: +39-011-4031-116
Product Information Center:
Phone: +39-011-4012-428
Fax: +39-011-40-287-428

Lithuania and Latvia
Lithuania – Vilnius
Phone: +370-5-213-1402
Fax: +370-5-213-1403
Product Information Center:
Phone: +370-5-211-3016
Fax: +370-5-213-1403

Netherlands – 's-Hertogenbosch
Phone: +31-73-6246-246
Fax: +31-73-6212-365
Product Information Center:
Phone: +31-73-6246-999
Fax: +31-73-6246-998

Norway – Nesbru
Phone: +47-66-77-88-50
Fax: +47-66-77-88-55

Poland – Warsaw
Phone: +48-22-4576-700
Fax: +48-22-4576-720
Product Information Center:
Phone: +48-22-4576-704
Fax: +48-22-4576-720

Romania – Bucharest
Phone: +40-21-311-3479/3596
Fax: +40-21-312-0574

Russia – Moscow
Phone: +7-495-790-7902
Fax: +7-495-721-1893
Product Information Center:
Phone: +7-495-790-7902-404
Fax: +7-495-790-7902-401

Russia – St. Petersburg
Phone: +7-812-718-8192
Fax: +7-812-718-8193

Slovenia – Ljubljana
Phone: +386-1561-3270
Fax: +386-1561-3240

South Africa – Port Elizabeth
Phone: +27-41-503-4500
Fax: +27-41-581-0440

Spain – Barcelona
Phone: +34-93-291-0330
Fax: +34-93-201-7879

Sweden – Upplands Väsby
Phone: +46-8-50-72-50-00
Fax: +46-8-50-72-50-01

Switzerland – Steinach
Phone: +41-71-447-0447
Fax: +41-71-447-0444

Turkey – Istanbul
Phone: +90-212-281-8181/2/3
+90-212-282-5130/5430
Fax: +90-212-281-8184

Ukraine – Kiev
Phone: +380-44-206-2265
Fax: +380-44-206-2264
Product Information Center:
Phone: +380-44-206-2265
Fax: +380-44-206-2264

United Kingdom –
Stanmore, Middlesex
Phone: +44-8706-080208
Fax: +44-208-954-6234
Product Information Center:
Freephone (UK only):
0800-267-666
Phone: +44-8706-080208
Fax: +44-208-420-8095

Tyco Electronics Corporation
Harrisburg, PA

82056-10K-MS-FP-6-08-OG3B

Tyco Electronics

Our commitment. Your advantage.