This document was generated on 03/27/2015

PLEASE CHECK WWW.MOLEX.COM FOR LATEST PART INFORMATION

Part Number: 15-04-0297
Status: Active
Description: Custom Polarizing Key

Documents:
3D Model
Drawing (PDF)
RoHS Certificate of Compliance (PDF)

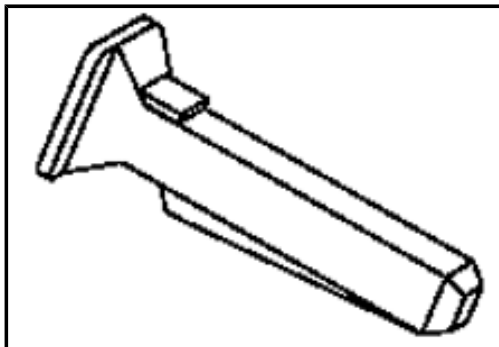

Series image - Reference only

General

Product Family	Accessories
Series	42324
Component Type	Polarizing Key
Product Name	N/A
UPC	800753605442

Physical

Circuits (Loaded)	1
Color - Resin	Natural
Lock to Mating Part	No
Material - Resin	Nylon
Net Weight	1.640/g
Packaging Type	Bag

Material Info

Old Part Number	42324-A

Reference - Drawing Numbers

Sales Drawing	SD-42324

EU RoHS
ELV and RoHS Compliant
REACH SVHC
Contains SVHC: No
Low-Halogen Status
Low-Halogen

China RoHS

Need more information on product environmental compliance?

Email productcompliance@molex.com
For a multiple part number RoHS Certificate of Compliance, click here

Please visit the Contact Us section for any non-product compliance questions.

Search Parts in this Series
42324Series

Use With
41695 KK® Crimp Terminal Housing. 41815 KK® PC Board Connector

This document was generated on 03/27/2015

PLEASE CHECK WWW.MOLEX.COM FOR LATEST PART INFORMATION