METRAL®

HEADER, 5 ROW, SIGNAL, RIGHT ANGLE, PIN-IN-PASTE, WIDE BODY

FEATURES & BENEFITS

- In accordance with IEC 60917 and IEC 61076-4-104 (Futurebus+)
- 5 row and 2 mm pitch permit high signal density (250 contacts per 100 mm connector length)
- Modular design guarantees flexibility

PRODUCT

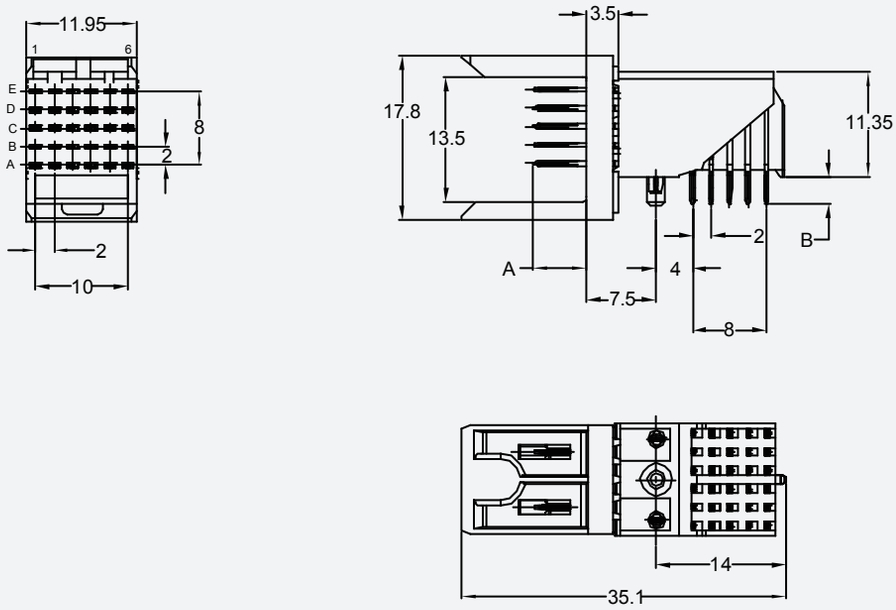

HEADER, 5 ROW, SIGNAL, RIGHT ANGLE, PIN-IN-PASTE, WIDE BODY

TECHNICAL INFORMATION

MATERIALS

- Spacing: 2,00 mm x 2,00 mm
- Housing: Glass-filled LCP, colour natural
- Flammability rating: UL 94 V-0
- Pin material: Phosphor bronze
- Performance level: Telcordia CO

ELECTRICAL PERFORMANCE

- Current rating: 1 A
- Insulation resistance: $5x10^3$ MΩ initially, $1x10^3$ MΩ after tests
- Withstanding voltage: 1000 V rms (sea level)

ENVIRONMENTAL

- Operating temperature range: -55°C to + 125°C
- RoHs information, this product is compatible according to the European Union Directive 2002/95/IEC

MECHANICAL PERFORMANCE

- Insertion force: 0,45 N max. per individual signal contact (mating)
- Withdrawal force: 0,15 N max. per individual signal contact (unmating)
- Recommended hole diameter: 0,65 – 0,80 mm

SPECIFICATIONS

- Product specification: GS-12-446

APPROVALS & CERTIFICATIONS

- For application equipment, check out the application equipment table

PACKAGING

- Standard: Trays

PROCESSING INFORMATION

- Pick&place by vacuum nozzle or mechanical gripper
- Automatic Surface-mount reflow process, resistance for Lead Free reflow temperature

TYPICAL APPLICATIONS

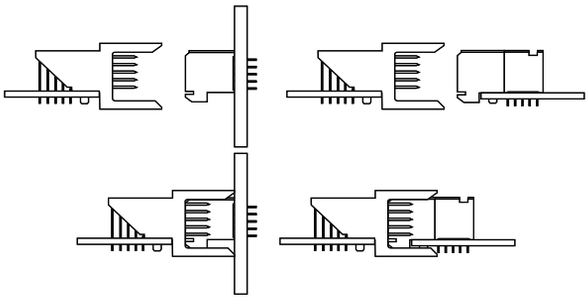

MATING DATA

- Receptacle, straight, press-fit
  - 1 mod – Part number 85761-1101LF
- Receptacle, straight, solder-to-board
  - 1 mod – Part number HM1S51FRR000H6PLF

PART NUMBERS

HM1L5 x LFP000H6PLF

BASE PART NUMBER	TYPE	NO. OF ROWS	NO. OF POS.	CONFIGURATION	000	PERFORMANCE	PACKAGING	LF
HM1	L = Signal header right angle, wide body	5 = 5 row	1 = 1 module (5 x 6 pos.)	LFP = Pin-in-Paste		H6 = Telcordia CO	P = Trays	LF = Lead free

Mating length (A)	Tail length (B)
5,75 mm	2,90 mm
1,6 mm PCB thickness	

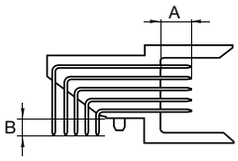

BPLMSRH5RPPW0314EA4

Note: For other special patterns or loadings, please check drawings, all other configurations on request only

For more information,
please contact: Communications@fci.com
or visit us at www.fci.com

Disclaimer
Please note that the above information is subject to change without notice.