Midas Components Limited
Electra House
32 Southtown Road
Great Yarmouth
Norfolk
NR31 0DU
England

Telephone +44 (0)1493 602602
Fax +44 (0)1493 665111
Email sales@midasdisplays.com
Website www.midasdisplays.com

Specification	
Part Number:	MCCOG240160B6W-FPTLW
Version:	
Date:	

Revision

No.	Date	Description	Item	Page

Midas LCD Part Number System

MC	COG	132033	A	*	6	W	*	*	-	S	N	T	L	W	*	*
1	2	3	4	5	6	7	8	9	-	10	11	12	13	14	15	16

1 = **MC:** Midas Components

2 = **Blank:** COB (chip on board) **COG**: chip on glass

3 = **No of dots** (e.g. 240064 = 240 x 64 dots) (e.g. 21605 = 2 x 16 5mm C.H.)

4 = **Series**

5 = **Series Variant:** A to Z – **see addendum**

6 = **3:** 3 o'clock **6:** 6 o'clock **9**: 9 o'clock **12**: 12 o'clock

7 = S: Normal (0 to + 50 deg C) **W:** Wide temp. (-20 to + 70 deg C) **X:** Extended temp (-30 + 80 Deg C)

8 = **Character Set**

Blank: Standard (English/Japanese)
C: Chinese Simplified (Graphic Displays only)
CB: Chinese Big 5 (Graphic Displays only)
H: Hebrew
K: European (std) (English/German/French/Greek)
L: English/Japanese (special)
M: European (English/Scandinavian)
R: Cyrillic
W: European (English/Greek)
U: European (English/Scandinavian/Icelandic)

9 = **Bezel Height** (where applicable /available)

	Top of Bezel to Top of PCB	LED Connection Common (via pins 1 and 2)	Array or Edge Lit
Blank	9.5mm / not applicable	via pins 15+ 16-	Array
2	8.9 mm	Common	Array
3	7.8 mm	Separate	Array
4	7.8 mm	Common	Array
5	9.5 mm	Separate	Array
6	7 mm	Common	Array
7	7 mm	Separate	Array
8	6.4 mm	Common	Edge
9	6.4 mm	Separate	Edge
A	5.5 mm	Common	Edge
B	5.5 mm	Separate	Edge
D	6.0mm	Separate	Edge
E	5.0mm	Separate	Edge
F	4.7mm	Common	Edge
G	3.7mm	Separate	EL
H	7 mm	Separate	Edge

10 = **T:** TN S: STN **B:** STN Blue **G:** STN Grey **F:** FSTN **F2:** FFSTN **V:** VA (Vertically Aligned)

11 = **P:** Positive **N**: Negative

12 = **R:** Reflective **M**: Transmissive **T:** Transflective

13 = **Backlight: Blank:** Reflective **L:** LED

14 = **Backlight Colour: Y:** Yellow-Green **W:** White **B:** Blue **R:** Red **A:** Amber **O:** Orange **G:** Green **RGB:** R.G.B.

15 = **Driver Chip: Blank:** Standard **I:** I²C S: SPI **T:** Toshiba T6963C **A:** Avant SAP1024B **R:** Raio RA6963

16 = **Voltage Variant**: e.g. **3** = 3v

CONTENTS

1. FUNCTIONS & FEATURES

1.1. Format	: 240x160 Dots
1.2. LCD mode	: FSTN /Positive /Transflective
1.3. Viewing direction	: 6 o'clock
1.4. Driving scheme	: 1/160 Duty cycle, 1/12 Bias
1.5. Power supply voltage (V_{DD})	: 3.3V
1.6. LCD driving voltage (VLCD)	: 15.6V (Reference voltage)
1.7. Operation temp	: -20~+70℃
1.8. Storage temp	: -30~+80℃
1.9. Back light	: EDGE White
1.10. RoHS compliant.	

2. MECHANICAL SPECIFICATIONS

2.1. Module size	: 60.0mm (L)*51.7 mm (W) (Not include FPC length)*5.0mm (H)
2.2. Viewing area	: 56.0mm(L)*38.7mm(W)
2.3. Dot pitch	: 0.2165mm(L)*0.2165mm(W)
2.4. Dot size	: 0.1965mm(L)*0.1965mm(W)
2.5. Weight	: Approx.

3. BLOCK DIAGRAM

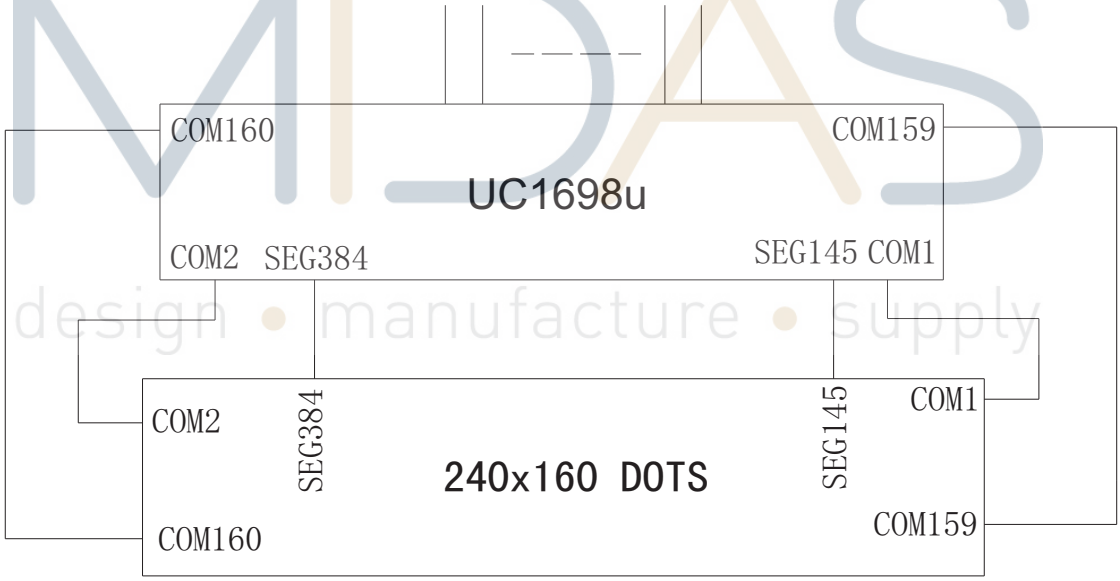

Figure 1.Block diagram

4. DIMENSIONAL OUTLINE

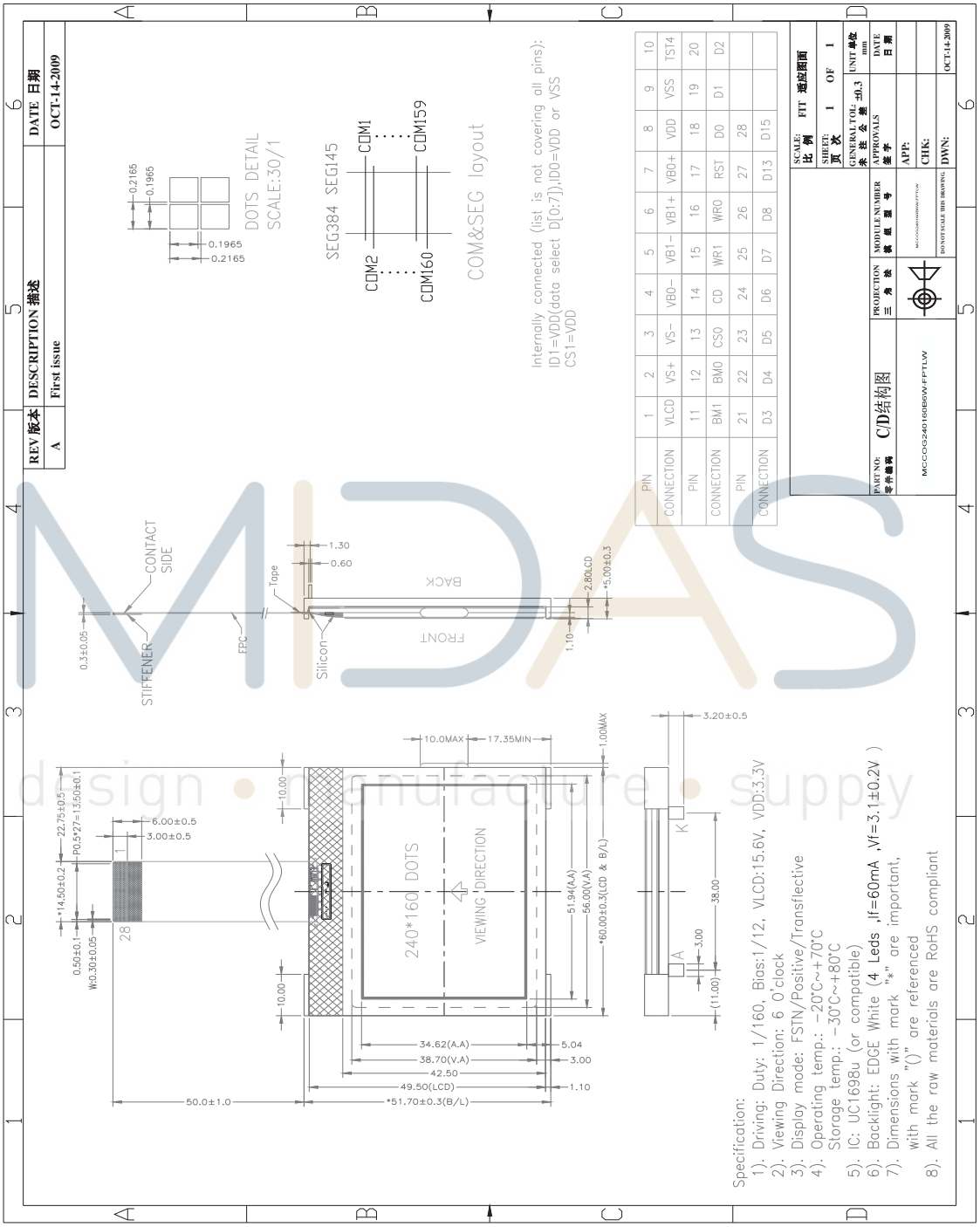

Figure2. Dimensional outline

5. LCD Driving voltage generator and bias reference circuit

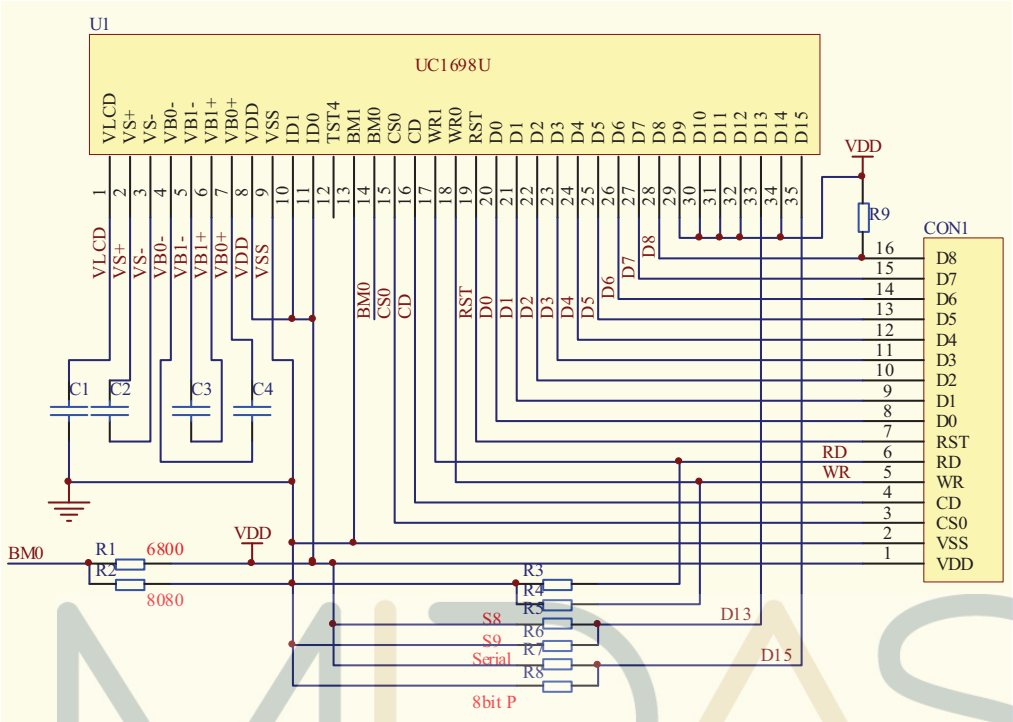

NOTE:

■Recommended component values:

C1,C3~C4: 1.0 to 4.7uF； C2: 0.1~1.0uF

R1~R9: select voltage level resistor, use 0 Ohm value to choose your application interface.

6. PIN DESCRIPTION

<table>
<tr><th>No.</th><th>Symbol</th><th>Function</th></tr>
<tr><td>1</td><td>VLCD</td><td>High voltage LCD power supply. Connect a capacitor to VSS</td></tr>
<tr><td>2</td><td>VS+</td><td rowspan="6">LCD SEG driving voltage, these voltages are generated internally, connect capacitors between these terminals. Please find <u>section 5</u> for details.</td></tr>
<tr><td>3</td><td>VS-</td></tr>
<tr><td>4</td><td>VB0-</td></tr>
<tr><td>5</td><td>VB1-</td></tr>
<tr><td>6</td><td>VB1+</td></tr>
<tr><td>7</td><td>VB0+</td></tr>
<tr><td>8</td><td>VDD</td><td>Power Supply (+3.0V).</td></tr>
<tr><td>9</td><td>VSS</td><td>Power ground.</td></tr>
<tr><td>10</td><td>TST4</td><td>Test control. This pin has on-chip pull-up resistor. Leave it open during normal operation.
TST4 is also used as one of the high voltage power supply for MTP programming operation.</td></tr>
<tr><td>11</td><td>BM1</td><td rowspan="2">Bus mode: The interface bus mode is determined by BM[1:0] and {DB15, DB13} by the following relationship:
<table>
<tr><th>BM[1:0]</th><th>{DB15, DB13}</th><th>Mode</th></tr>
<tr><td>11</td><td>Data</td><td>6800/16-bit</td></tr>
<tr><td>10</td><td>Data</td><td>8080/16-bit</td></tr>
<tr><td>01</td><td>0x</td><td>6800/8-bit</td></tr>
<tr><td>00</td><td>0x</td><td>8080/8-bit</td></tr>
<tr><td>00</td><td>10</td><td>4-wire SPI w/ 8-bit token
(S8: conventional)</td></tr>
<tr><td>00</td><td>11</td><td>3/4-wire SPI w/ 8-bit token
(S8uc: Ultra-Compact)</td></tr>
<tr><td>01</td><td>10</td><td>3-wire SPI w/ 9-bit taken
(S9: conventional)</td></tr>
</table></td></tr>
<tr><td>12</td><td>BM0</td></tr>
<tr><td>13</td><td>CS0</td><td>Chip select signal. chip is selected when CS0=”L”.</td></tr>
<tr><td>14</td><td>CD</td><td>Register select input pin: In S9 mode CD pin is not used.
CD = “H”: display data.
CD = “L”: control data.</td></tr>
<tr><td>15</td><td>WR1</td><td rowspan="2">WR[1:0] control the read/write operation of the host interface. See section Host Interface for more detail.
In parallel mode, the meaning of WR[1:0] depends on whether the interface is in the 6800 mode or the 8080 mode. In serial interface modes, these two pins are not used, connect them to V_{SS}.</td></tr>
<tr><td>16</td><td>WR0</td></tr>
<tr><td>17</td><td>RST</td><td>Reset signal. Chip will be initialized when RST=”L”.</td></tr>
</table>

18~28	D0~D8, D13,D15	Bi-directional bus for parallel host interfaces. In serial modes, connect DB[0] to SCK, DB[8] to SDA. Always connect unused pins to either V_{SS} or V_{DD}.

	BM=1x (16-bit)	BM=0x (8-bit) ID1=0	BM=0x (8-bit) ID1=1	BM=00 (S8/S8uc)	BM=01 (S9)
DB0	D0	D0/D8	D0/D8	SCK	SCK
DB1	D1	–	D1/D9	–	–
DB2	D2	D1/D9	D2/D10	–	–
DB3	D3	–	D3/D11	–	–
DB4	D4	D2/D10	D4/D12	–	–
DB5	D5	–	D5/D13	–	–
DB6	D6	D3/D11	D6/D14	–	–
DB7	D7	–	D7/D15	–	–
DB8	D8	D4/D12	–	SDA	SDA
DB9	D9	–	–	–	–
DB10	D10	D5/D13	–	–	–
DB11	D11	–	–	–	–
DB12	D12	D6/D14	–	–	–
DB13	D13	–	–	0:S8/1:S8uc	0
DB14	D14	D7/D15	–	–	–
DB15	D15	0	0	1	1

7. MAXIMUM ABSOUTE LIMIT

Maximum Ratings (Voltage Reference to VSS)(for IC)

ABSOLUTE MAXIMUM RATINGS

In accordance with IEC134, Note 1 and 2

Symbol	Parameter	Min.	Max.	Unit
V_{DD}	Logic Supply voltage	-0.3	+4.0	V
V_{DD2}	LCD Generator Supply voltage	-0.3	+4.0	V
V_{DD3}	Analog Circuit Supply voltage	-0.3	+4.0	V
$V_{DD2/3}$-V_{DD}	Voltage difference between V_{DD} and $V_{DD2/3}$	--	1.6	V
V_{LCD}	LCD Driving voltage (-25°C ~ +75°C)	-0.3	+19.8	V
V_{IN}	Digital input signal	-0.4	V_{DD} + 0.5	V
T_{OPR}	Operating temperature range	-30	+85	°C
T_{STR}	Storage temperature	-55	+125	°C

NOTE:

1. V_{DD} is based on V_{SS} = 0V
2. Stress beyond ranges listed above may cause permanent damages to the device.

8. ELECTRICAL CHARACTERISTICS

DC CHARACTERISTICS

DC CHARACTERISTICS

Symbol	Parameter	Conditions	Min.	Typ.	Max.	Unit
V_{DD}	Supply for digital circuit		1.65		3.3	V
$V_{DD2/3}$	Supply for bias & pump		2.7		3.3	V
V_{LCD}	Charge pump output	$V_{DD2/3}$ = 2.8V, 25°C		15.2	18	V
V_D	LCD data voltage	$V_{DD2/3}$ = 2.8V, 25°C	1.09		1.95	V
V_{IL}	Input logic LOW				$0.2V_{DD}$	V
V_{IH}	Input logic HIGH		$0.8V_{DD}$			V
V_{OL}	Output logic LOW				$0.2V_{DD}$	V
V_{OH}	Output logic HIGH		$0.8V_{DD}$			V
I_{IL}	Input leakage current				1.5	μA
I_{SB}	Standby current	V_{DD} = $V_{DD2/3}$ = 3.3V, Temp = 85°C			50	μA
C_{IN}	Input capacitance			5	10	PF
C_{OUT}	Output capacitance			5	10	PF
$R_{ON(SEG)}$	SEG output impedance	V_{LCD} = 16.5V		850	1100	Ω
$R_{ON(COM)}$	COM output impedance	V_{LCD} = 16.5V		950	1100	Ω
f_{LINE}	Average line rate	LC[4:3] = 10b, 25°C	-10%	37.0	+10%	Klps

9. TIMING CHARACTERISTICS

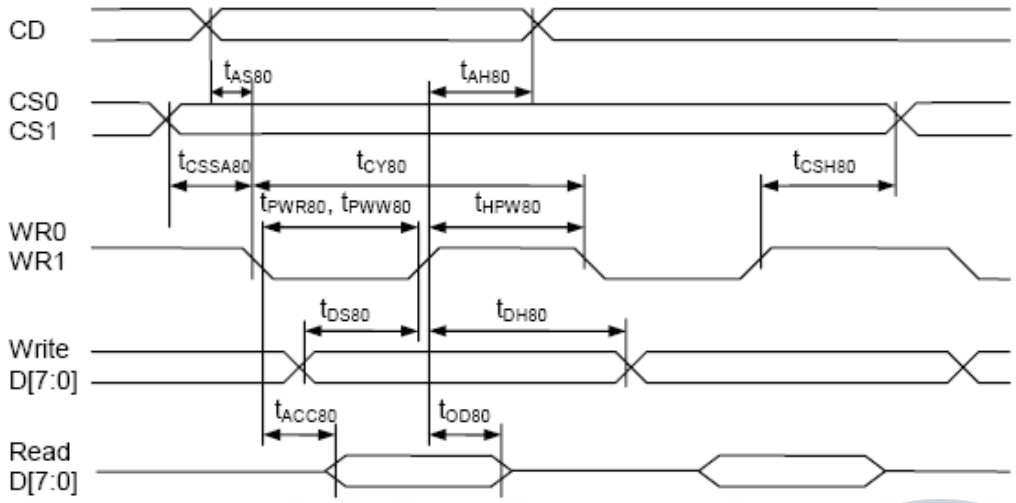

Parallel Bus Timing Characteristics (for 8080 MCU)

(2.5V ≤ V_{DD} < 3.3V, Ta= –30 to +85°C)

Symbol	Signal	Description	Condition	Min.	Max.	Units
t_{AS80} t_{AH80}	CD	Address setup time Address hold time		0 0	–	nS
t_{CY80}		System cycle time 16-bit bus (read) (write) 8-bit bus (read) (write)	 LC[7:6]=10b LC[7:6]=01b	 170 130 100 80 90	–	nS
t_{PWR80}	WR1	Pulse width 16-bit (read) 8-bit		85 50	–	nS
t_{PWW80}	WR0	Pulse width 16-bit (write) 8-bit	 LC[7:6]=10b LC[7:6]=01b	65 40 45	–	nS
t_{HPW80}	WR0, WR1	High pulse width 16-bit bus (read) (write) 8-bit bus (read) (write)	 LC[7:6]=10b LC[7:6]=01b	 85 65 50 40 45	–	nS
t_{DS80} t_{DH80}	D0~D15	Data setup time Data hold time		30 0	–	nS
t_{ACC80} t_{OD80}		Read access time Output disable time	C_L = 100pF	– 15	60 30	nS
T_{CSSA80} t_{CSH80}	CS1/CS0	Chip select setup time		5 5		nS

RESET TIMING

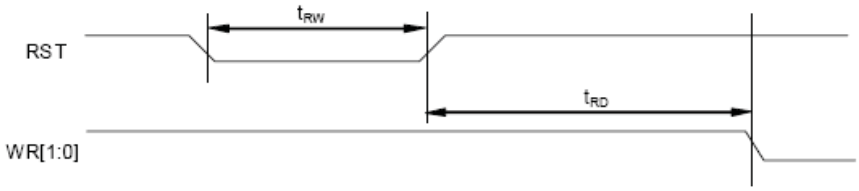

Reset Characteristics

(1.65V ≤ V_{DD} < 3.3V, Ta= –30 to +85°C)

Symbol	Signal	Description	Condition	Min.	Max.	Units
t_{RW}	RST	Reset low pulse width		3	–	µS
t_{RD}	RST, WR	Reset to WR pulse delay		10	–	mS

10. CONTROL AND DISPLAY INSTRUCTION

The following is a list of host commands supported by UC1698u

C/D: 0: Control, 1: Data
W/R: 0: Write Cycle, 1: Read Cycle
#: Useful Data bits –: Don't Care

	Command	C/D	W/R	D7	D6	D5	D4	D3	D2	D1	D0	Action	Default
1	Write Data Byte	1	0	#	#	#	#	#	#	#	#	Write 1 byte	N/A
2	Read Data Byte	1	1	#	#	#	#	#	#	#	#	Read 1 byte	N/A
3	Get Status & PM	0	1	GE	MX	MY	WA	DE	WS	MD	MS	Get {Status, Ver, PMO, Product Code, PID, MID}	N/A
				Ver	PMO[6:0]								
				Product Code (8h)				PID[1:0]		MID[1:0]			
4	Set Column Address LSB	0	0	0	0	0	0	#	#	#	#	Set CA[3:0]	0
	Set Column Address MSB	0	0	0	0	0	1	0	#	#	#	Set CA[6:4]	0
5	Set Temp. Compensation	0	0	0	0	1	0	0	1	#	#	Set TC[1:0]	0
6	Set Power Control	0	0	0	0	1	0	1	0	#	#	Set PC[1:0]	10b
7	Set Adv. Program Control (double-byte command)	0	0	0	0	1	1	0	0	0	R	Set APC[R][7:0], R = 0 or 1	N/A
		0	0	#	#	#	#	#	#	#	#		
8	Set Scroll Line LSB	0	0	0	1	0	0	#	#	#	#	Set SL[3:0]	0
	Set Scroll Line MSB	0	0	0	1	0	1	#	#	#	#	Set SL[7:4]	0
9	Set Row Address LSB	0	0	0	1	1	0	#	#	#	#	Set RA[3:0]	0
	Set Row Address MSB	0	0	0	1	1	1	#	#	#	#	Set RA[7:4]	0
10	Set V_{BIAS} Potentiometer (double-byte command)	0	0	1	0	0	0	0	0	0	1	Set PM[7:0]	40H
		0	0	#	#	#	#	#	#	#	#		
11	Set Partial Display Control	0	0	1	0	0	0	0	1	0	#	Set LC[8]	0
12	Set RAM Address Control	0	0	1	0	0	0	1	#	#	#	Set AC[2:0]	001b
13	Set Fixed Lines	0	0	1	0	0	1	0	0	0	0	Set {FLT, FLB}	0
		0	0	#	#	#	#	#	#	#	#		
14	Set Line Rate	0	0	1	0	1	0	0	0	#	#	Set LC[4:3]	10b
15	Set All-Pixel-ON	0	0	1	0	1	0	0	1	0	#	Set DC[1]	0
16	Set Inverse Display	0	0	1	0	1	0	0	1	1	#	Set DC[0]	0
17	Set Display Enable	0	0	1	0	1	0	1	#	#	#	Set DC[4:2]	110b
18	Set LCD Mapping Control	0	0	1	1	0	0	0	#	#	#	Set LC[2:0]	0
19	Set N-Line Inversion	0	0	1	1	0	0	1	0	0	0	Set NIV[4:0]	1DH
				-	-	-	#	#	#	#	#		
20	Set Color Pattern	0	0	1	1	0	1	0	0	0	#	Set LC[5]	0 (BGR)
21	Set Color Mode	0	0	1	1	0	1	0	1	#	#	Set LC[7:6]	10b
22	Set COM Scan Function	0	0	1	1	0	1	1	#	#	#	Set CSF[2:0]	000b
23	System Reset	0	0	1	1	1	0	0	0	1	0	System Reset	N/A
24	NOP	0	0	1	1	1	0	0	0	1	1	No operation	N/A
25	Set Test Control (double-byte command)	0	0	1	1	1	0	0	1	TT		For testing only. Do not use.	N/A
		0	0	#	#	#	#	#	#	#	#		
26	Set LCD Bias Ratio	0	0	1	1	1	0	1	0	#	#	Set BR[1:0]	11b: 12
27	Set COM End	0	0	1	1	1	1	0	0	0	1	Set CEN[6:0]	159
		0	0	-	#	#	#	#	#	#	#		
28	Set Partial Display Start	0	0	1	1	1	1	0	0	1	0	Set DST[6:0]	0
		0	0	-	#	#	#	#	#	#	#		
29	Set Partial Display End	0	0	1	1	1	1	0	0	1	1	Set DEN[6:0]	159
		0	0	-	#	#	#	#	#	#	#		
30	Set Window Program Starting Column Address	0	0	1	1	1	1	0	1	0	0	Shared with MTP commands: Set WPC0	0
		0	0	-	#	#	#	#	#	#	#		
31	Set Window Program Starting Row Address	0	0	1	1	1	1	0	1	0	1	Shared with MTP commands: Set WPP0	0
		0	0	#	#	#	#	#	#	#	#		
32	Set Window Program Ending Column Address	0	0	1	1	1	1	0	1	1	0	Shared with MTP commands: Set WPC1	127
		0	0	-	#	#	#	#	#	#	#		
33	Set Window Program Ending Row Address	0	0	1	1	1	1	0	1	1	1	Shared with MTP commands: Set WPP1	159
		0	0	#	#	#	#	#	#	#	#		
34	Window Program Mode	0	0	1	1	1	1	1	0	0	#	Set AC[3]	0: Inside
35	Set MTP Operation control	0	0	1	0	1	1	1	0	0	0	Set MTPC[4:0]	10H
		0	0	-	-	-	#	#	#	#	#		

	Command	C/D	W/R	D7	D6	D5	D4	D3	D2	D1	D0	Action		Default
36	Set MTP Write Mask	0 0 0	0 0 0	1 - -	0 # -	1 # -	1 # -	1 # -	0 # -	0 # #	1 # #	Set MTPM[6:0] MTPM1[1:0]		0
37	Set V_{MTP1} Potentiometer	0 0	0 0	1 #	1 #	1 #	1 #	0 #	1 #	0 #	0 #	Shared with Window Program commands	Set MTP1	N/A
38	Set V_{MTP2} Potentiometer	0 0	0 0	1 #	1 #	1 #	1 #	0 #	1 #	0 #	1 #		Set MTP2	N/A
39	Set MTP Write Timer	0 0	0 0	1 #	1 #	1 #	1 #	0 #	1 #	1 #	0 #		Set MTP3	N/A
40	Set MTP Read Timer	0 0	0 0	1 #	1 #	1 #	1 #	0 #	1 #	1 #	1 #		Set MTP4	N/A

NOTE:

- All other bit patterns other than commands listed above may result in undefined behavior.
- The interpretation of commands (36)~(40) depends on the setting of register MTPC[3].
  - Commands (37)~(40) are shared with commands (30)~(33). These two sets of commands share exactly the same code and control registers. When MTPC[3]=0, they are interpreted as Window Program commands and registers. When MTPC[3]=1, they function as MTP Control commands and registers.
- After MTP ERASE or PROGRAM operation, before resuming normal operation, please always
  a) Remove TST4 power source,
  b) Do a full V_{DD} ON-OFF-ON cycle.
- Under 16-bit bus mode and CD=0, D[15:8] is ignored and only D[7:0] is used. As a result, the bus cycles for commands under 16-bit bus and 8-bit bus are the same, and double-byte commands still need two bus cycles under 16-bit bus mode.

  Example:

  8-bit bus mode:

  Set PL[1:0] = 2'b11 : D[7:0] = 0010 1011

  Set PM[7:0] = 8'h8b : 1st D[7:0] = 1000 0001

  2nd D[7:0] = 1000 1011

  16-bit bus mode:

  Set PL[1:0] = 2'b11: D[15:0] = 0000 0000 0010 1011

  Set PM[7:0] = 8'h8b: 1st D[15:0] = 0000 0000 1000 0001

  2nd D[15:0] = 0000 0000 1000 1011

11. ELECTRO-OPTICAL CHARACTERISTICS

(V_{DD} = 3.3V, Ta = 25°C)

Item	Symbol	Condition	Min	Typ	Max	Unit
Operating Voltage for LCD	Vop	Ta =-20°C	15.8	16.1	16.4	V
		Ta = 25°C	15.3	15.6	15.9	
		Ta = 70°C	14.8	15.1	15.4	
Response time	Tr	Ta = 25°C	---	250	500	ms
	Tf		---	300	600	ms
Contrast	Cr	Ta = 25°C	2	4	---	---
Viewing angle range	θ	Cr≥2	-35	---	+35	deg
	Φ		-35	---	+40	deg

The following charts is for your reference of the data in the above form.

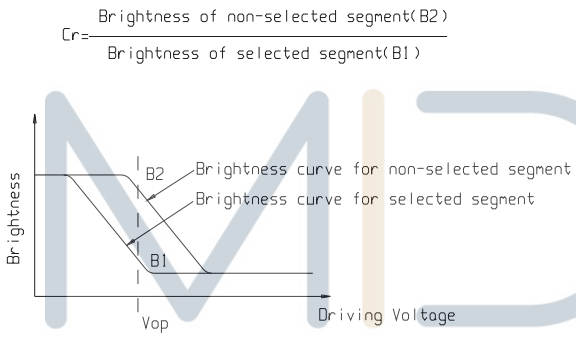

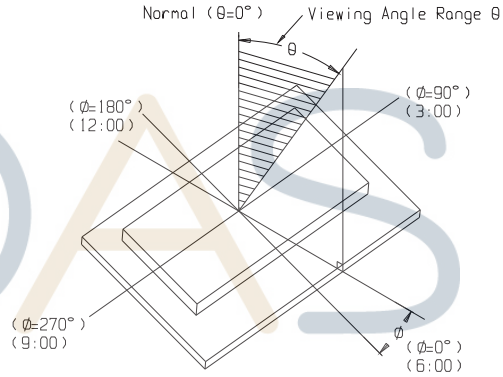

12. BACK LIGHT CHARACTERISTICS

LCD Module with edge LED Backlight. Electrical ratings. Ta = 25°C

Item	Symbol	Condition	Min	Typ	Max	Unit
Forward Voltage	IF	IF=60 mA	2.9	3.1	3.3	V
Reverse Current	IR	VR=0.8V	---	20	---	mA
Luminous Intensity (Without LCD)	LV	IF=60 mA	350	400	---	Cd/m^2
Wave length	λρ	IF=60 mA	X=0.28 Y=0.28	---	X=0.32 Y=0.32	nm
Color	white					

Note:
when the temperature exceed 25℃, the approved current decrease rate for Backlight change as the temperature increase is: -0.36*4mA/℃(below 25℃, the current refer to constant, which would not change with temperature).

13. PRECAUTION FOR USING LCD/LCM

After reliability test, recovery time should be 24 hours minimum. Moreover, functions, performance and appearance shall be free from remarkable deterioration within 50,000 hours(average) under ordinary operating and storage conditions room temperature (20±8°C), normal humidity (below 65% RH), and in the area not exposed to direct sun light. Using LCM beyond these conditions will shorten the life time.

Precaution for using LCD/LCM

LCD/LCM is assembled and adjusted with a high degree of precision. Do not attempt to make any alteration or modification. The followings should be noted.

General Precautions:

1. LCD panel is made of glass. Avoid excessive mechanical shock or applying strong pressure onto the surface of display area.
2. The polarizer used on the display surface is easily scratched and damaged. Extreme care should be taken when handling. To clean dust or dirt off the display surface, wipe gently with cotton, or other soft material soaked with isoproply alcohol, ethyl alcohol or trichlorotriflorothane, do not use water, ketone or aromatics and never scrub hard.
3. Do not tamper in any way with the tabs on the metal frame.
4. Do not made any modification on the PCB without consulting Midas.
5. When mounting a LCM, make sure that the PCB is not under any stress such as bending or twisting. Elastomer contacts are very delicate and missing pixels could result from slight dislocation of any of the elements.
6. Avoid pressing on the metal bezel, otherwise the elastomer connector could be deformed and lose contact, resulting in missing pixels and also cause rainbow on the display.
7. Be careful not to touch or swallow liquid crystal that might leak from a damaged cell. Any liquid crystal adheres to skin or clothes, wash it off immediately with soap and water.

Static Electricity Precautions:

1. CMOS-LSI is used for the module circuit; therefore operators should be grounded whenever he/she comes into contact with the module.
2. Do not touch any of the conductive parts such as the LSI pads; the copper leads on the PCB and the interface terminals with any parts of the human body.
3. Do not touch the connection terminals of the display with bare hand; it will cause disconnection or defective insulation of terminals.
4. The modules should be kept in anti-static bags or other containers resistant to static for storage.
5. Only properly grounded soldering irons should be used.
6. If an electric screwdriver is used, it should be grounded and shielded to prevent sparks.

7. The normal static prevention measures should be observed for work clothes and working benches.
8. Since dry air is inductive to static, a relative humidity of 50-60% is recommended.

Soldering Precautions:

1. Soldering should be performed only on the I/O terminals.
2. Use soldering irons with proper grounding and no leakage.
3. Soldering temperature: 280°C±10°C
4. Soldering time: 3 to 4 second.
5. Use eutectic solder with resin flux filling.
6. If flux is used, the LCD surface should be protected to avoid spattering flux.
7. Flux residue should be removed.

Operation Precautions:

1. The viewing angle can be adjusted by varying the LCD driving voltage Vo.
2. Since applied DC voltage causes electro-chemical reactions, which deteriorate the display, the applied pulse waveform should be a symmetric waveform such that no DC component remains. Be sure to use the specified operating voltage.
3. Driving voltage should be kept within specified range; excess voltage will shorten display life.
4. Response time increases with decrease in temperature.
5. Display color may be affected at temperatures above its operational range.
6. Keep the temperature within the specified range usage and storage. Excessive temperature and humidity could cause polarization degradation, polarizer peel-off or generate bubbles.
7. For long-term storage over 40°C is required, the relative humidity should be kept below 60%, and avoid direct sunlight.

Limited Warranty

Midas LCDs and modules are not consumer products, but may be incorporated by Midas' customers into consumer products or components thereof, Midas does not warrant that its LCDs and components are fit for any such particular purpose.

1. The liability of Midas is limited to repair or replacement on the terms set forth below. Midas will not be responsible for any subsequent or consequential events or injury or damage to any personnel or user including third party personnel and/or user. Unless otherwise agreed in writing between Midas and the customer, Midas will only replace or repair any of its LCD which is found defective electrically or visually when inspected in accordance with Midas general LCD inspection standard . (Copies available on request)
2. No warranty can be granted if any of the precautions state in handling liquid crystal display above has been disregarded. Broken glass, scratches on polarizer mechanical damages as well as defects that are caused accelerated environment tests are excluded from warranty.
3. In returning the LCD/LCM, they must be properly packaged; there should be detailed description of the failures or defect.

14. LCM TEST CRITERIA

1. Objective

The criteria is made for customer and company to check on delivery LCM end product, guarantee the production quality to meet with customer's demand.

2. Range

2.1 Suit for our company's LCD end production.

3. Testing equipment

Function tester、sliding calipers、microscope、visual magnifying glass、ESD arm protector、finger cover、label、 high-low temperature experiment case、refrigerator、fixed-voltage power supply（DC），table lamp and so on.

4. Sampling plan and quote superscript

4.1.1 According to GB/T 2828.1---2003/ISO2859-1:1999，normal check of one sampling plan, general level of inspection II.

Testing item	Sample quantity	AQL judgment
cosmetic	II one time sample	MA=0.4 MI=1.5
scale	N=3	C=0
function	II one time sample	MA=0.4 MI=1.5

4.1.2 GB/T 2828.1---2003/ISO2859-1:1999 check and count the sampling procedure and table one by one.

4.1.3 GB/T 1619.96 Test method of twisting out LCD device.

4.1.4 GB/T 12848.91 General standard of super-out LCD device.

4.1.5 GB2421-89 Basic experience environment of electrical and electronic products

4.1.6 IPC-A-610C Check condition of electrical assemblies.

5. Test condition and basis

5.1 visual：General under the condition of 25±5℃，45±20%RH，with enough light（>300cd/cm2），the distance between operator and LCD is 30cm， use the method of reflective to test is normal，the backlight products, must test under the condition of luminance smaller than 100cd/cm2，and lit up the backlight.

5.2 The test left and right direction is 45°,up and down view angle is 0-45°

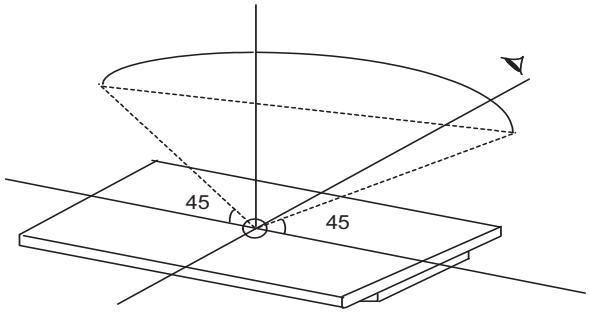

（STN depends on -20-55°）to have a test，as follows：

5.3 Viewing area definition

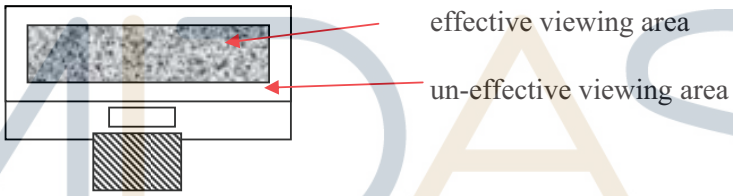

5.4 Naked eye examination（except with assistant of magnifying glass to do defect test）.

5.5 Electricity property

Testing use self-made/professional LCM test installation: contrast with the products file and designed drawing, ask for the display content and parameters accord with the document, and the result in line with the pattern

5.5.1 Testing voltage（V）：Refer to the requirement of test device，customer have no special statement, think the external circuit adjustable, effect controlled in agreed voltage fluctuation（without special agreement，accord to LCD driving voltage at 9V or bellowed control in±0.3V, above 9V, at least is LCD driving voltage ±3%），to the products with special voltage demand, assurance display effect through circuit adjust，when necessary made the maximum and minimum receivable samples.

5.5.2 Power consumption of electric current（I）：refer to product document or designed blueprint identify.

6. Defective item and testing criteria

6.1 Scale：To the whole cosmetic scale and which could influence the assemble position , should accord to the drawing, main defect.

6.2 capacity test:

order	item	description	MAJ	MIN	Accept standard
6.2.1	Segment missing	SEG/COM showed line or spot missing caused by line break/bad connection，i8nner short 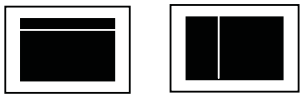	√		reject
6.2.3	No display/no action	Normal connection, no display	√		reject
6.2.4	mistake/abnormal	Accord to common scanner procedure, picture and order inconsistent with requirement	√		reject
6.2.5	Viewing angle mistake	The clearest direction inconsistent with requirement	√		reject
6.2.6	Display dark/light	Normal display the whole ratio too light or dark	√		Over voltage standard,reject
6.2.7	Slow reflect	Reflection of lit or off on part dose not uniform with others.	√		reject
6.2.8	Show more symbol, more lines and rows	due to lack of matching unrightenousness or etched caused alignment or logo when lit display of symbols, row or line.		√	refer to spot/line standard
6.2.9	light/dim segment	On the condition of normal voltage, the display contrast is not uniformed		√	Reject or refer to samples
6.2.10	PI black/white spot	Poor connect in LCD lead to black/white spot in word change procedure		√	Suspended screen , refer to spot/line，others OK
6.2.11	pinhole/white spot	ITO missing lead to picture incomplete when lit up  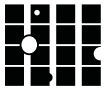 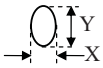 d = (X+Y)/2		√	refer to spot/line standard
6.2.12	word deformed	Mistaken match caused the display width dose not conform to standard, then lead to convex or air leakage: |Ia-Ib|≤1/4W(W is the normal width) 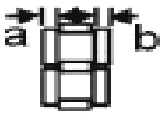		√	accept |Ia-Ib|>1/4W, reject
6.2.13	High current	LCM current exceed requirement		√	reject

6.3 LCD visual defect

6.4 6.3.1 spot defect(controlled in viewing area, in un-viewing area, OK)

Defective item	average diameter（d）	Accept number	MAJ	MIN
Spot defect（black spot, impurity, pinhole,, contain LC defect）	d≤0.2	3		√
	0.2<d≤0.25	2		
	0.25<d≤0.30	1		

6.3.2 Line defect(controlled in viewing area, in un-viewing area, OK)

Defective item	length(L)	width(W)	Accept number	MAJ	MIN
line defect (segment, impurity) 	≤5.0	≤0.02	3		√
	≤3.0	≤0.03	3		
	≤3.0	≤0.05	1		
note： 1.when width is bigger than 0.1, it needs to handle as line defect。					

6.3.3 polarizer air bubble (controlled in viewing area, in un-viewing area, OK)

Defective item	average diameter（d）	Accept number	MAJ	MIN
polarizer air bubble、convex point 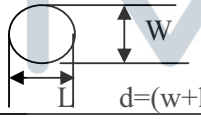 d=(w+l)/2	d≤0.3	3		√
	0.3<d≤0.5	2		
	0.5<d≤0.8	1		

6.3.4 Damaged(LCD edge reveal without mental frame, contain COG,H/S, deduct BL directly)

order	item	Permit standard		MAJ	MIN
6.3.4.1	Conductor chips 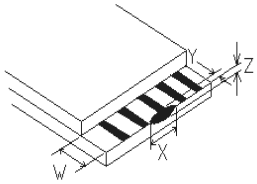		（mm）		√
		X	≤1/8L		
		Y	≤1/3W		
		Z	≤1/2t		
		Accept number	2		
		When Y≤0.2mm, neglect the length of X, un-conductor chips， depend on X≤1/10L， Y≤1/2W。			
6.3.4.2	chips(ITO lead position) 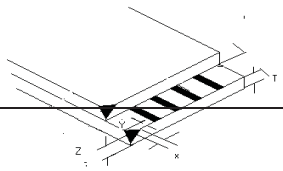		（mm）	MAJ	MIN
		X	Not enter into frit or do not attach the conductor		√
		Y			
		Z	≤t		
		Accept number	2		

		Seal position refer to 6.3.4.3， do not enter into frame black edge. Chips damage the conducing， refer to 6.3.4.1			
6.3.4.3	interface seal rubber crack (outer crack) 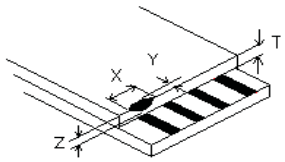 		（mm）	MAJ	MIN
		X	≤1/8 L		√
		Y	≤1/2H		
		z	≤ 1/2t		
		Accept number	2		
		Seal edge rubber inner crack conform to the standard of outer. when the back of stage cracked refer to 6.3.4.1.			
note: t---glass thickness, L---length, H---distance. W—glass stage width					

6.3.5 others

order	item	description	MAJ	MIN	Accept standard
6.3.5.1	coloration/background	One product, different color		√	Reject or refer to limited sample
6.3.5.2	Leak ink(LC)	/	√		reject
6.3.5.3	Without protect film	/		√	reject

6.4 backlight components

order	item	description	MAJ	MIN	Accept standard
6.4.1	Backlight unlit, wrong color	/	√		reject
6.4.2	Color deviation	Lit up, color differ from the sample, or do not match the drawing after testing		√	Refer to sample and drawing
6.4.3	Brightness deviation	Lit up, lightness differ from the sample, or do not match the drawing after testing, or over the sample range of±30%.		√	Refer to sample and drawing
6.4.4	LED uneven	Lit up, brightness uneven, exceed the drawing specification.		√	Refer to sample and drawing
6.4.5	Spot/line segment	There are tainted, segment when lit up.		√	Refer to 6.3.1/6.3.2

6.5 Mental frame

order	item	description	MAJ	MIN	Accept standard
6.5.1	material/surface	Mental frame/surface approach inconsistent with specification.	√		reject

6.5.2	Twist un-quality/without twisting	Twist method/direction default,	√		reject
6.5.3	oxidation, paint stripping, discoloration, dent ,segment	The surface of the mental frame dose not appear oxidation, front surface paint stripping and segment to bottom≤0.8mm, exceed 3 point, length≤5.0mm, width≤0.05mm line defect exceed 2 point, positive dent, bubble and side surface have paint stripping and segment to bottom≤1.0mm exceed 3 point, width≤0.05mm line defect exceed 3 point.		√	reject
6.5.4	prick	Prick is too long, enter into viewing area		√	reject

6.6 PCB/COB part

order	item	description	MAJ	MIN	Accept standard
6.6.1	Seal rubber defect	1. COB inner round white remark line have PAD out reveal.. 2. height exceed the document/drawing specification. 3. COB seal rubber should in white remark, the largest out scale can not exceed remark radius 2MM 4. COB surface has clear lien assemble mark, some even through the pinhole. 5. COB surface pinhole diameter over 0.25mm or have tainted..		√	reject
6.6.2	PCB cosmetic defect	1. PCB golden figure surface can not have oxidation, dirt. 2. PCB can not appear bubble caused by reflow. 3. PCB green oil drop /segment lead to leak copper. Use mending, circuit diameterψ can not over 1.3mm, other diameterψ can not over 2.6mm, total less than 10 point. otherwise reject.		√	reject
6.6.3	Components mistake	1. PCB components inconsistent with drawing. Find wrong pitch, more or less pitch, polar reverse（LCD voltage side circuit/BL current limit resistance modify, only if customer have special require, otherwise do not control） 2. The JUMP of PCB shot need refer to the structure picture, appear more or less	√	√	reject

		soldering. 3. customer have special require on the component, mode specification and supplier should conform to technique demand. Otherwise reject.			

6.7 SMT part (vague parts refer to IPC-A-610C)

Order	Item	Description	MAJ	MIN	Accept standard
6.7.1	Soldering defect	Cold solder, fake solder, missing solder，crack，tin un-dissolved		√	reject
6.7.2	Solder ball/bridge	Solder ball/bridge drop lead to spot short.		√	reject
6.7.3	DIP parts	DIP parts，keypad，connection appear flowing and tilted.		√	reject
6.7.4	Spot shape	Inner dent，can not form to cover solder or less solder, otherwise reject		√	reject
6.7.5	Component out reveal	After cutting, just left 0.5mm~2mm,can not damage solder surface and covered the component foot. Otherwise reject.		√	reject
6.7.6	Cosmetic defect	Solder residues appear tawny or coke black. PCB solder spot remained white mist residues after clean.		√	reject

6.8 Thermal press part（contain H/S，FPC）

Order	item	description	MAJ	MIN	Accept standard
6.8.1	Model specifications do not match		√		reject
6.8.2	Scale/position	Material scale must in the drawing specification range，the contact area of dielectric material and the body（ITO，PDA） should be above 1/2， and the dislocation must control in specification		√	Accept
6.8.3	Thermal press dirt	Thermal area tainted can not lead to short, OK，in through position， dirt area is smaller than 50%，OK。		√	accept
6.8.4	creases			√	Refer to limited sample

6.9 connection and other parts

order	item	description	MAJ	MIN	Accept standard
6.9.1	Specification un-matched	Connection and other components do not conform to drawing requirement	√		reject

6.9.2	Position and order	Solder position should consistent with the drawing .		√	reject
6.9.3	cosmetic	1. the body of our connect component and the PIN foot have solder-helping. 2. PIN connection PIN deformation bigger than PIN width 1/2.		√	reject

6.10 General visual

order	item	description	MAJ	MIN	Accept standard
6.10.1	Connect material	FPC golden figure or H/S,FFC out part of PIN leak copper or material, have damaged. FPC,FFC,COF,H/S connected material curved（except for original ）. FPC、PCB golden figure bigger than 1PIN width. FPC/FFC material segment, crease exceed the specification.		√	reject
6.10.2	Protect defect	Protect film do not cover circuit totally（LikeH/S，FFC，FPC） or not contact with interface, or add on PIN outer part.		√	reject
6.10.3	Visual dirty	The surface of end products have dirt, rubber，PCB/COB un-welding area has solder ball. The defective remark or label do not clean.		√	reject
6.10.4	Assembly black spot	Add backlight，taint and black spot		√	Refer to 6.3.1
6.10.5	Product remark	Model defer from approved remark and technique requirement、 position, vague and leak.		√	reject
6.10.6	Inner product packing	Packing inconsistent with requirement，segment short，wrong amount. And inconsistent with shipment remark/ order demand.		√	reject

7. Reality test

Test item	Condition	Time(hrs)	Accept standard
high temp storage	80°C	120	Before and after test, function and cosmetic is qualified.
high temperature operating	70°C	120	
low temperature storage	-30°C	120	
low temperature operating	-20°C	120	
temperature& humility test	40°C/ 90%RH	120	
temperature shock	-20°C ← 25°C →+70°C (30 min ← 5 min → 30min)	10 cycles	

Note：If customer have requirement, please put forward on the item development.（high/low temperature storage and experiment, the temperature refer to specific requirement），±5℃ deviation could be accept.

8. Packing

8.1 Product design must meet the requirement of packing design and check on delivery. Besides the product name, specification, model, quantity and date on the label, the quality chapter is necessary after checked by QA. Incomplete or mistake, is not qualified.

8.2 When the safety of the packing (earthquake, moisture-proof, anti-static, anti-squeezed) exist problem, not qualified.

8.3 When customer's special requirement is confirmed and accepted by interior, carry it out and check on delivery.

8.4 Environment protected and unprotected products must have obvious distinguished remark. The present remark adopts "RoHS". If customer have special requirement, use the appointed remark or label.

9. Others

9.1 No-provision or compromised item, depend on two side agreement and limited prototype.