SN54150, SN54151A, SN54LS151, SN54S151, SN74150, SN74151A, SN74LS151, SN74S151 DATA SELECTORS/MULTIPLEXERS

DECEMBER 1972—REVISED MARCH 1988

- '150 Selects One-of-Sixteen Data Sources
- Others Select One-of-Eight Data Sources
- All Perform Parallel-to-Serial Conversion
- All Permit Multiplexing from N Lines to One Line
- Also For Use as Boolean Function Generator
- Input-Clamping Diodes Simplify System Design
- Fully Compatible with Most TTL Circuits

TYPE	TYPICAL AVERAGE PROPAGATION DELAY TIME DATA INPUT TO W OUTPUT	TYPICAL POWER DISSIPATION
'150	13 ns	200 mW
'151A	8 ns	145 mW
'LS151	13 ns	30 mW
'S151	4.5 ns	225 mW

description

These monolithic data selectors/multiplexers contain full on-chip binary decoding to select the desired data source. The '150 selects one-of-sixteen data sources; the '151A, 'LS151, and 'S151 select one-of-eight data sources. The '150, '151A, 'LS151, and 'S151 have a strobe input which must be at a low logic level to enable these devices. A high level at the strobe forces the W output high, and the Y output (as applicable) low.

The '150 has only an inverted W output; the '151A, 'LS151, and 'S151 feature complementary W and Y outputs.

The '151A and '152A incorporate address buffers that have symmetrical propagation delay times through the complementary paths. This reduces the possibility of transients occurring at the output(s) due to changes made at the select inputs, even when the '151A outputs are enabled (i.e., strobe low).

SN54150 . . . J OR W PACKAGE
SN74150 . . . N PACKAGE
(TOP VIEW)

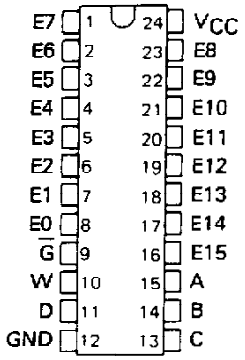

SN54151A, SN54LS151, SN54S151 . . . J OR W PACKAGE
SN74151A . . . N PACKAGE
SN74LS151, SN74S151 . . . D OR N PACKAGE
(TOP VIEW)

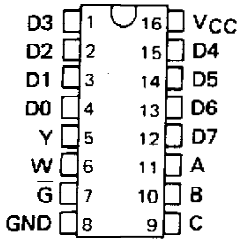

SN54LS151, SN54S151 . . . FK PACKAGE
(TOP VIEW)

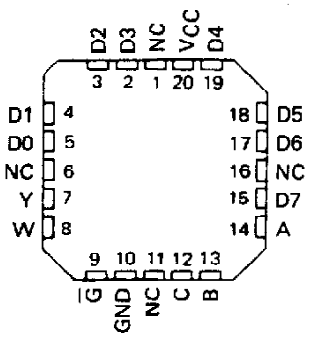

NC - No internal connection

PRODUCTION DATA documents contain information current as of publication date. Products conform to specifications per the terms of Texas Instruments standard warranty. Production processing does not necessarily include testing of all parameters.

logic symbols†

'150

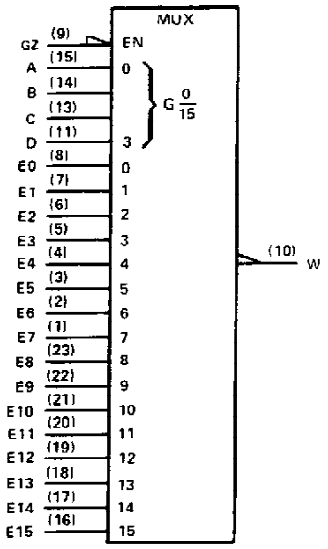

'151A, 'LS151, 'S151

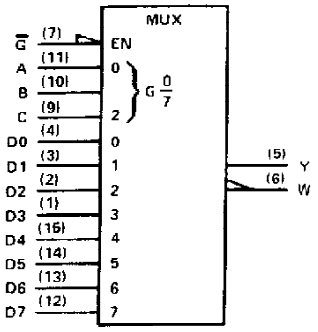

†These symbols are in accordance with ANSI/IEEE Std. 91-1984 and IEC Publication 617-12.
Pin numbers shown are D, J, N, and W packages.

'150

FUNCTION TABLE

INPUTS					OUTPUT
SELECT				STROBE	W
D	C	B	A	$\overline{G}$	
X	X	X	X	H	H
L	L	L	L	L	$\overline{E0}$
L	L	L	H	L	$\overline{E1}$
L	L	H	L	L	$\overline{E2}$
L	L	H	H	L	$\overline{E3}$
L	H	L	L	L	$\overline{E4}$
L	H	L	H	L	$\overline{E5}$
L	H	H	L	L	$\overline{E6}$
L	H	H	H	L	$\overline{E7}$
H	L	L	L	L	$\overline{E8}$
H	L	L	H	L	$\overline{E9}$
H	L	H	L	L	$\overline{E10}$
H	L	H	H	L	$\overline{E11}$
H	H	L	L	L	$\overline{E12}$
H	H	L	H	L	$\overline{E13}$
H	H	H	L	L	$\overline{E14}$
H	H	H	H	L	$\overline{E15}$

'151A, 'LS151, 'S151

FUNCTION TABLE

INPUTS				OUTPUTS	
SELECT			STROBE	Y	W
C	B	A	$\overline{G}$		
X	X	X	H	L	H
L	L	L	L	D0	$\overline{D0}$
L	L	H	L	D1	$\overline{D1}$
L	H	L	L	D2	$\overline{D2}$
L	H	H	L	D3	$\overline{D3}$
H	L	L	L	D4	$\overline{D4}$
H	L	H	L	D5	$\overline{D5}$
H	H	L	L	D6	$\overline{D6}$
H	H	H	L	D7	$\overline{D7}$

H = high level, L = low level, X = irrelevant
$\overline{E0}$, $\overline{E1}$ . . . $\overline{E15}$ = the complement of the level of the respective E input
D0, D1 . . . D7 = the level of the D respective input

schematics of inputs and outputs

EQUIVALENT OF EACH INPUT OF '150

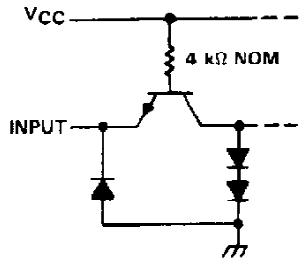

EQUIVALENT OF EACH INPUT OF '151A

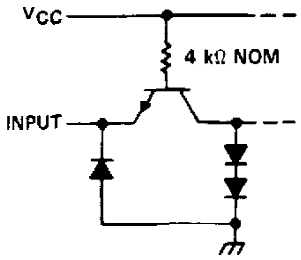

EQUIVALENT OF EACH INPUT OF 'LS151

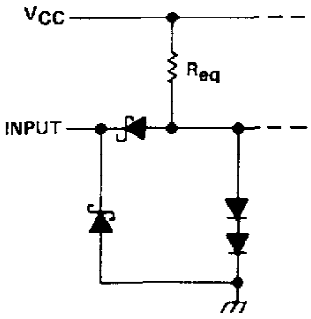

Data select and strobe R_{eq} = 20 kΩ NOM
Data inputs R_{eq} = 17 kΩ NOM

EQUIVALENT OF EACH INPUT OF 'S151

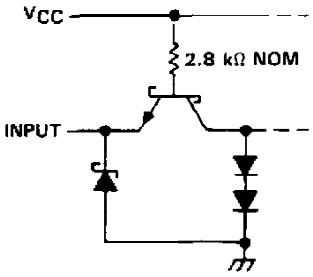

TYPICAL OF ALL OUTPUTS OF '150, '151A

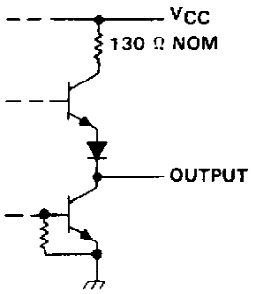

TYPICAL OF ALL OUTPUTS OF 'LS151

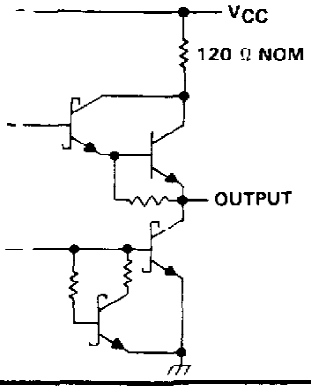

TYPICAL OF ALL OUTPUTS OF 'S151

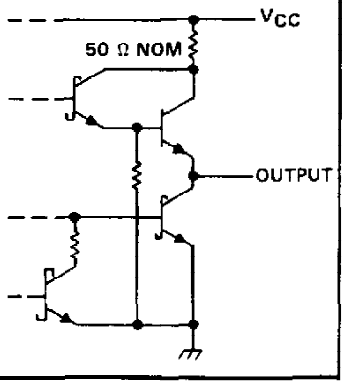

recommended operating conditions

	SN54'			SN74'			UNIT
	MIN	NOM	MAX	MIN	NOM	MAX	
Supply voltage, V_{CC}	4.5	5	5.5	4.75	5	5.25	V
High-level output current, I_{OH}			−800			−800	μA
Low-level output current, I_{OL}			16			16	mA
Operating free-air temperature, T_A	−55		125	0		70	°C

electrical characteristics over recommended operating free-air temperature range (unless otherwise noted)

PARAMETER		TEST CONDITIONS†		'150			'151A			UNIT
				MIN	TYP‡	MAX	MIN	TYP‡	MAX	
V_{IH}	High-level input voltage			2			2			V
V_{IL}	Low-level input voltage					0.8			0.8	V
V_{IK}	Input clamp voltage	V_{CC} = MIN, I_I = −8 mA				−1.5			−1.5	V
V_{OH}	High-level output voltage	V_{CC} = MIN, V_{IH} = 2 V, V_{IL} = 0.8 V, I_{OH} = −800 μA		2.4	3.4		2.4	3.4		V
V_{OL}	Low-level output voltage	V_{CC} = MIN, V_{IH} = 2 V, V_{IL} = 0.8 V, I_{OL} = 16 mA			0.2	0.4		0.2	0.4	V
I_I	Input current at maximum input voltage	V_{CC} = MAX, V_I = 5.5 V				1			1	mA
I_{IH}	High-level input current	V_{CC} = MAX, V_I = 2.4 V				40			40	μA
I_{IL}	Low-level input current	V_{CC} = MAX, V_I = 0.4 V				−1.6			−1.6	mA
I_{OS}	Short-circuit output current§	V_{CC} = MAX	SN54'	−20		−55	−20		−55	mA
			SN74'	−18		−55	−18		−55	
I_{CC}	Supply current	V_{CC} = MAX, See Note 3			40	68		29	48	mA

† For conditions shown as MIN or MAX, use the appropriate value specified under recommended operating conditions for the applicable device type.
‡ All typical values at V_{CC} = 5 V, T_A = 25°C.
§ Not more than one output of the '151A should be shorted at a time.
NOTE 3: I_{CC} is measured with the strobe and data select inputs at 4.5 V, all other inputs and outputs open.

switching characteristics, V_{CC} = 5 V, T_A = 25°C

PARAMETER¶	FROM (INPUT)	TO (OUTPUT)	TEST CONDITIONS	'150			'151A			UNIT
				MIN	TYP	MAX	MIN	TYP	MAX	
t_{PLH}	A, B, or C (4 levels)	Y	C_L = 15 pF, R_L = 400 Ω, See Note 4					25	38	ns
t_{PHL}								25	38	
t_{PLH}	A, B, C, or D (3 levels)	W			23	35		17	26	ns
t_{PHL}					22	33		19	30	
t_{PLH}	Strobe $\overline{G}$	Y						21	33	ns
t_{PHL}								22	33	
t_{PLH}	Strobe $\overline{G}$	W			15.5	24		14	21	ns
t_{PHL}					21	30		15	23	
t_{PLH}	D0 thru D7	Y						13	20	ns
t_{PHL}								18	27	
t_{PLH}	E0 thru E15, or D0 thru D7	W			8.5	14		8	14	ns
t_{PHL}					13	20		8	14	

¶ t_{PLH} = propagation delay time, low-to-high-level output
t_{PHL} = propagation delay time, high-to-low-level output
NOTE 4: Load circuits and voltage waveforms are shown in Section 1.

recommended operating conditions

	SN54LS151			SN74LS151			UNIT
	MIN	NOM	MAX	MIN	NOM	MAX	
Supply voltage, V_{CC}	4.5	5	5.5	4.75	5	5.25	V
High-level output current, I_{OH}			−400			−400	μA
Low-level output current, I_{OL}			4			8	mA
Operating free-air temperature, T_A	−55		125	0		70	C

electrical characteristics over recommended operating free-air temperature range (unless otherwise noted)

PARAMETER		TEST CONDITIONS†		SN54LS151			SN74LS151			UNIT
				MIN	TYP‡	MAX	MIN	TYP‡	MAX	
V_{IH}	High-level input voltage			2			2			V
V_{IL}	Low-level input voltage					0.7			0.8	V
V_{IK}	Input clamp voltage	V_{CC} = MIN, I_I = −18 mA				−1.5			−1.5	V
V_{OH}	High-level output voltage	V_{CC} = MIN, V_{IH} = 2 V, V_{IL} = V_{IL}max, I_{OH} = −400 μA		2.5	3.4		2.7	3.4		V
V_{OL}	Low-level output voltage	V_{CC} = MIN, V_{IH} = 2 V, V_{IL} = V_{IL}max	I_{OL} = 4 mA		0.25	0.4		0.25	0.4	V
			I_{OL} = 8 mA					0.35	0.5	
I_I	Input current at maximum input voltage	V_{CC} = MAX, V_I = 7 V				0.1			0.1	mA
I_{IH}	High-level input current	V_{CC} = MAX, V_I = 2.7 V				20			20	μA
I_{IL}	Low-level input current	V_{CC} = MAX, V_I = 0.4 V				−0.4			−0.4	mA
I_{OS}	Short-circuit output current§	V_{CC} = MAX		−20		−100	−20		−100	mA
I_{CC}	Supply current	V_{CC} = MAX, Outputs open, All inputs at 4.5 V			6.0	10		6.0	10	mA

† For conditions shown as MIN or MAX, use the appropriate value specified under recommended operating conditions for the applicable device type.
‡ All typical values are at V_{CC} = 5 V, T_A = 25°C.
§ Not more than one output should be shorted at a time and duration of short-circuit should not exceed one second.

switching characteristics, V_{CC} = 5 V, T_A 25°C

PARAMETER¶	FROM (INPUT)	TO (OUTPUT)	TEST CONDITIONS	MIN	TYP	MAX	UNIT
t_{PLH}	A, B, or C (4 levels)	Y	C_L = 15 pF, R_L = 2 kΩ, See Note 4		27	43	ns
t_{PHL}					18	30	
t_{PLH}	A, B, or C (3 levels)	W			14	23	ns
t_{PHL}					20	32	
t_{PLH}	Strobe $\overline{G}$	Y			26	42	ns
t_{PHL}					20	32	
t_{PLH}	Strobe $\overline{G}$	W			15	24	ns
t_{PHL}					18	30	
t_{PLH}	Any D	Y			20	32	ns
t_{PHL}					16	26	
t_{PLH}	Any D	W			13	21	ns
t_{PHL}					12	20	

¶ t_{PLH} = propagation delay time, low-to-high-level output
t_{PHL} = propagation delay time, high-to-low-level output
NOTE 4: Load circuits and voltage waveforms are shown in Section 1.

recommended operating conditions

	SN54S151			SN74S151			UNIT
	MIN	NOM	MAX	MIN	NOM	MAX	
Supply voltage, V_{CC}	4.5	5	5.5	4.75	5	5.25	V
High-level output current, I_{OH}			−1			−1	mA
Low-level output current, I_{OL}			20			20	mA
Operating free-air temperature, T_A	−55		125	0		70	°C

electrical characteristics over recommended operating free-air temperature range (unless otherwise noted)

PARAMETER		TEST CONDITIONS†		MIN	TYP‡	MAX	UNIT
V_{IH}	High-level input voltage			2			V
V_{IL}	Low-level input voltage					0.8	V
V_{IK}	Input clamp voltage	V_{CC} = MIN, I_I = −18 mA				−1.2	V
V_{OH}	High-level output voltage	V_{CC} = MIN, V_{IH} = 2 V, V_{IL} = 0.8 V, I_{OH} = −1 mA	SN54S151	2.5	3.4		V
			SN74S151	2.7	3.4		
V_{OL}	Low-level output voltage	V_{CC} = MIN, V_{IH} = 2 V, V_{IL} = 0.8 V, I_{OL} = 20 mA				0.5	V
I_I	Input current at maximum input voltage	V_{CC} = MAX, V_I = 5.5 V				1	mA
I_{IH}	High-level input current	V_{CC} = MAX, V_I = 2.7 V				50	μA
I_{IL}	Low-level input current	V_{CC} = MAX, V_I = 0.5 V				−2	mA
I_{OS}	Short-circuit output current§	V_{CC} = MAX		−40		−100	mA
I_{CC}	Supply current	V_{CC} = MAX, All inputs at 4.5 V, All outputs open			45	70	mA

†For conditions shown as MIN or MAX, use the appropriate value specified under recommended operating conditions for the applicable device type.
‡All typical values are at V_{CC} = 5 V, T_A = 25°C.
§Not more than one output should be shorted at a time, and duration of the short-circuit should not exceed one second.

switching characteristics, V_{CC} = 5 V, T_A 25°C

PARAMETER¶	FROM (INPUT)	TO (OUTPUT)	TEST CONDITIONS	MIN	TYP	MAX	UNIT
t_{PLH}	A, B, or C (4 levels)	Y	C_L = 15 pF, R_L = 280 kΩ, See Note 4		12	18	ns
t_{PHL}					12	18	
t_{PLH}	A, B, or C (3 levels)	W			10	15	ns
t_{PHL}					9	13.5	
t_{PLH}	Any D	Y			8	12	ns
t_{PHL}					8	12	
t_{PLH}	Any D	W			4.5	7	ns
t_{PHL}					4.5	7	
t_{PLH}	Strobe $\overline{G}$	Y			11	16.5	ns
t_{PHL}					12	18	
t_{PLH}	Strobe $\overline{G}$	W			9	13	ns
t_{PHL}					8.5	12	

¶t_{PLH} = propagation delay time, low-to-high-level output
t_{PHL} = propagation delay time, high-to-low-level output
NOTE 4: Load circuits and voltage waveforms are shown in Section 1.

PACKAGING INFORMATION

Orderable Device	Status (1)	Package Type	Package Drawing	Pins	Package Qty	Eco Plan (2)	Lead/Ball Finish (6)	MSL Peak Temp (3)	Op Temp (°C)	Device Marking (4/5)	Samples
5962-9558001QJA	ACTIVE	CDIP	J	24	1	TBD	Call TI	N / A for Pkg Type	-55 to 125	5962-9558001QJ A SNJ54150J	Samples
5962-9558001QKA	ACTIVE	CFP	W	24	1	TBD	A42	N / A for Pkg Type	-55 to 125	5962-9558001QK A SNJ54150W	Samples
5962-9558001QKA	ACTIVE	CFP	W	24	1	TBD	A42	N / A for Pkg Type	-55 to 125	5962-9558001QK A SNJ54150W	Samples
5962-9751601QCA	OBSOLETE	CDIP	J	14		TBD	Call TI	Call TI	-55 to 125		
76010012A	ACTIVE	LCCC	FK	20	1	TBD	POST-PLATE	N / A for Pkg Type	-55 to 125	76010012A SNJ54LS 151FK	Samples
76010012A	ACTIVE	LCCC	FK	20	1	TBD	POST-PLATE	N / A for Pkg Type	-55 to 125	76010012A SNJ54LS 151FK	Samples
7601001EA	ACTIVE	CDIP	J	16	1	TBD	A42	N / A for Pkg Type	-55 to 125	7601001EA SNJ54LS151J	Samples
7601001EA	ACTIVE	CDIP	J	16	1	TBD	A42	N / A for Pkg Type	-55 to 125	7601001EA SNJ54LS151J	Samples
7601001FA	NRND	CFP	W	16	1	TBD	A42	N / A for Pkg Type	-55 to 125	7601001FA SNJ54LS151W	
7601001FA	NRND	CFP	W	16	1	TBD	A42	N / A for Pkg Type	-55 to 125	7601001FA SNJ54LS151W	
JM38510/01401BKA	ACTIVE	CFP	W	24	1	TBD	A42	N / A for Pkg Type	-55 to 125	JM38510/ 01401BKA	Samples
JM38510/01401BKA	ACTIVE	CFP	W	24	1	TBD	A42	N / A for Pkg Type	-55 to 125	JM38510/ 01401BKA	Samples
JM38510/07901BEA	ACTIVE	CDIP	J	16	1	TBD	A42	N / A for Pkg Type	-55 to 125	JM38510/ 07901BEA	Samples
JM38510/07901BFA	ACTIVE	CFP	W	16	1	TBD	A42	N / A for Pkg Type	-55 to 125	JM38510/ 07901BFA	Samples
JM38510/30901B2A	ACTIVE	LCCC	FK	20	1	TBD	POST-PLATE	N / A for Pkg Type	-55 to 125	JM38510/ 30901B2A	Samples

Orderable Device	Status (1)	Package Type	Package Drawing	Pins	Package Qty	Eco Plan (2)	Lead/Ball Finish (6)	MSL Peak Temp (3)	Op Temp (°C)	Device Marking (4/5)	Samples
JM38510/30901B2A	ACTIVE	LCCC	FK	20	1	TBD	POST-PLATE	N / A for Pkg Type	-55 to 125	JM38510/ 30901B2A	Samples
JM38510/30901BEA	ACTIVE	CDIP	J	16	1	TBD	A42	N / A for Pkg Type	-55 to 125	JM38510/ 30901BEA	Samples
JM38510/30901BEA	ACTIVE	CDIP	J	16	1	TBD	A42	N / A for Pkg Type	-55 to 125	JM38510/ 30901BEA	Samples
JM38510/30901BFA	ACTIVE	CFP	W	16	1	TBD	A42	N / A for Pkg Type	-55 to 125	JM38510/ 30901BFA	Samples
JM38510/30901BFA	ACTIVE	CFP	W	16	1	TBD	A42	N / A for Pkg Type	-55 to 125	JM38510/ 30901BFA	Samples
M38510/01401BKA	ACTIVE	CFP	W	24	1	TBD	A42	N / A for Pkg Type	-55 to 125	JM38510/ 01401BKA	Samples
M38510/01401BKA	ACTIVE	CFP	W	24	1	TBD	A42	N / A for Pkg Type	-55 to 125	JM38510/ 01401BKA	Samples
M38510/07901BEA	ACTIVE	CDIP	J	16	1	TBD	A42	N / A for Pkg Type	-55 to 125	JM38510/ 07901BEA	Samples
M38510/07901BFA	ACTIVE	CFP	W	16	1	TBD	A42	N / A for Pkg Type	-55 to 125	JM38510/ 07901BFA	Samples
M38510/30901B2A	ACTIVE	LCCC	FK	20	1	TBD	POST-PLATE	N / A for Pkg Type	-55 to 125	JM38510/ 30901B2A	Samples
M38510/30901B2A	ACTIVE	LCCC	FK	20	1	TBD	POST-PLATE	N / A for Pkg Type	-55 to 125	JM38510/ 30901B2A	Samples
M38510/30901BEA	ACTIVE	CDIP	J	16	1	TBD	A42	N / A for Pkg Type	-55 to 125	JM38510/ 30901BEA	Samples
M38510/30901BEA	ACTIVE	CDIP	J	16	1	TBD	A42	N / A for Pkg Type	-55 to 125	JM38510/ 30901BEA	Samples
M38510/30901BFA	ACTIVE	CFP	W	16	1	TBD	A42	N / A for Pkg Type	-55 to 125	JM38510/ 30901BFA	Samples
M38510/30901BFA	ACTIVE	CFP	W	16	1	TBD	A42	N / A for Pkg Type	-55 to 125	JM38510/ 30901BFA	Samples
SN54150J	ACTIVE	CDIP	J	24	1	TBD	Call TI	N / A for Pkg Type	-55 to 125	SN54150J	Samples
SN54150J	ACTIVE	CDIP	J	24	1	TBD	Call TI	N / A for Pkg Type	-55 to 125	SN54150J	Samples
SN54LS151J	ACTIVE	CDIP	J	16	1	TBD	A42	N / A for Pkg Type	-55 to 125	SN54LS151J	Samples

Orderable Device	Status (1)	Package Type	Package Drawing	Pins	Package Qty	Eco Plan (2)	Lead/Ball Finish (6)	MSL Peak Temp (3)	Op Temp (°C)	Device Marking (4/5)	Samples
SN54LS151J	ACTIVE	CDIP	J	16	1	TBD	A42	N / A for Pkg Type	-55 to 125	SN54LS151J	Samples
SN54S151J	ACTIVE	CDIP	J	16	1	TBD	A42	N / A for Pkg Type	-55 to 125	SN54S151J	Samples
SN54S15J	OBSOLETE	CDIP	J	14		TBD	Call TI	Call TI	-55 to 125		
SN74150N	LIFEBUY	PDIP	N	24	15	Pb-Free (RoHS)	CU	N / A for Pkg Type	0 to 70	SN74150N	
SN74150N	LIFEBUY	PDIP	N	24	15	Pb-Free (RoHS)	CU	N / A for Pkg Type	0 to 70	SN74150N	
SN74150NE4	LIFEBUY	PDIP	N	24	15	Pb-Free (RoHS)	CU	N / A for Pkg Type	0 to 70	SN74150N	
SN74150NE4	LIFEBUY	PDIP	N	24	15	Pb-Free (RoHS)	CU	N / A for Pkg Type	0 to 70	SN74150N	
SN74151AN	OBSOLETE	PDIP	N	16		TBD	Call TI	Call TI	0 to 70		
SN74151AN	OBSOLETE	PDIP	N	16		TBD	Call TI	Call TI	0 to 70		
SN74LS151D	ACTIVE	SOIC	D	16	40	Green (RoHS & no Sb/Br)	CU NIPDAU	Level-1-260C-UNLIM	0 to 70	LS151	Samples
SN74LS151D	ACTIVE	SOIC	D	16	40	Green (RoHS & no Sb/Br)	CU NIPDAU	Level-1-260C-UNLIM	0 to 70	LS151	Samples
SN74LS151DE4	ACTIVE	SOIC	D	16	40	Green (RoHS & no Sb/Br)	CU NIPDAU	Level-1-260C-UNLIM	0 to 70	LS151	Samples
SN74LS151DE4	ACTIVE	SOIC	D	16	40	Green (RoHS & no Sb/Br)	CU NIPDAU	Level-1-260C-UNLIM	0 to 70	LS151	Samples
SN74LS151DR	ACTIVE	SOIC	D	16	2500	Green (RoHS & no Sb/Br)	CU NIPDAU	Level-1-260C-UNLIM	0 to 70	LS151	Samples
SN74LS151DR	ACTIVE	SOIC	D	16	2500	Green (RoHS & no Sb/Br)	CU NIPDAU	Level-1-260C-UNLIM	0 to 70	LS151	Samples
SN74LS151DRE4	ACTIVE	SOIC	D	16	2500	Green (RoHS & no Sb/Br)	CU NIPDAU	Level-1-260C-UNLIM	0 to 70	LS151	Samples
SN74LS151DRE4	ACTIVE	SOIC	D	16	2500	Green (RoHS & no Sb/Br)	CU NIPDAU	Level-1-260C-UNLIM	0 to 70	LS151	Samples
SN74LS151J	OBSOLETE	CDIP	J	16		TBD	Call TI	Call TI	0 to 70		
SN74LS151J	OBSOLETE	CDIP	J	16		TBD	Call TI	Call TI	0 to 70		
SN74LS151N	ACTIVE	PDIP	N	16	25	Pb-Free (RoHS)	CU NIPDAU	N / A for Pkg Type	0 to 70	SN74LS151N	Samples

Orderable Device	Status (1)	Package Type	Package Drawing	Pins	Package Qty	Eco Plan (2)	Lead/Ball Finish (6)	MSL Peak Temp (3)	Op Temp (°C)	Device Marking (4/5)	Samples
SN74LS151N	ACTIVE	PDIP	N	16	25	Pb-Free (RoHS)	CU NIPDAU	N / A for Pkg Type	0 to 70	SN74LS151N	Samples
SN74LS151N3	OBSOLETE	PDIP	N	16		TBD	Call TI	Call TI	0 to 70		
SN74LS151N3	OBSOLETE	PDIP	N	16		TBD	Call TI	Call TI	0 to 70		
SN74LS151NE4	ACTIVE	PDIP	N	16	25	Pb-Free (RoHS)	CU NIPDAU	N / A for Pkg Type	0 to 70	SN74LS151N	Samples
SN74LS151NE4	ACTIVE	PDIP	N	16	25	Pb-Free (RoHS)	CU NIPDAU	N / A for Pkg Type	0 to 70	SN74LS151N	Samples
SN74LS151NSR	ACTIVE	SO	NS	16	2000	Green (RoHS & no Sb/Br)	CU NIPDAU	Level-1-260C-UNLIM	0 to 70	74LS151	Samples
SN74LS151NSR	ACTIVE	SO	NS	16	2000	Green (RoHS & no Sb/Br)	CU NIPDAU	Level-1-260C-UNLIM	0 to 70	74LS151	Samples
SN74S151N3	OBSOLETE	PDIP	N	16		TBD	Call TI	Call TI	0 to 70		
SN74S151N3	OBSOLETE	PDIP	N	16		TBD	Call TI	Call TI	0 to 70		
SNJ54150J	ACTIVE	CDIP	J	24	1	TBD	Call TI	N / A for Pkg Type	-55 to 125	5962-9558001QJ A SNJ54150J	Samples
SNJ54150J	ACTIVE	CDIP	J	24	1	TBD	Call TI	N / A for Pkg Type	-55 to 125	5962-9558001QJ A SNJ54150J	Samples
SNJ54150W	ACTIVE	CFP	W	24	1	TBD	A42	N / A for Pkg Type	-55 to 125	5962-9558001QK A SNJ54150W	Samples
SNJ54150W	ACTIVE	CFP	W	24	1	TBD	A42	N / A for Pkg Type	-55 to 125	5962-9558001QK A SNJ54150W	Samples
SNJ54LS151FK	ACTIVE	LCCC	FK	20	1	TBD	POST-PLATE	N / A for Pkg Type	-55 to 125	76010012A SNJ54LS 151FK	Samples
SNJ54LS151FK	ACTIVE	LCCC	FK	20	1	TBD	POST-PLATE	N / A for Pkg Type	-55 to 125	76010012A SNJ54LS 151FK	Samples
SNJ54LS151J	ACTIVE	CDIP	J	16	1	TBD	A42	N / A for Pkg Type	-55 to 125	7601001EA SNJ54LS151J	Samples
SNJ54LS151J	ACTIVE	CDIP	J	16	1	TBD	A42	N / A for Pkg Type	-55 to 125	7601001EA SNJ54LS151J	Samples

Orderable Device	Status (1)	Package Type	Package Drawing	Pins	Package Qty	Eco Plan (2)	Lead/Ball Finish (6)	MSL Peak Temp (3)	Op Temp (°C)	Device Marking (4/5)	Samples
SNJ54LS151W	NRND	CFP	W	16	1	TBD	A42	N / A for Pkg Type	-55 to 125	7601001FA SNJ54LS151W	
SNJ54LS151W	NRND	CFP	W	16	1	TBD	A42	N / A for Pkg Type	-55 to 125	7601001FA SNJ54LS151W	
SNJ54S151FK	LIFEBUY	LCCC	FK	20	1	TBD	POST-PLATE	N / A for Pkg Type	-55 to 125	SNJ54S 151FK	
SNJ54S151J	ACTIVE	CDIP	J	16	1	TBD	A42	N / A for Pkg Type	-55 to 125	SNJ54S151J	Samples
SNJ54S151W	ACTIVE	CFP	W	16	1	TBD	A42	N / A for Pkg Type	-55 to 125	SNJ54S151W	Samples
SNJ54S15FK	OBSOLETE	LCCC	FK	20		TBD	Call TI	Call TI	-55 to 125		
SNJ54S15J	OBSOLETE	CDIP	J	14		TBD	Call TI	Call TI	-55 to 125		
SNJ54S15W	OBSOLETE	CFP	W	14		TBD	Call TI	Call TI	-55 to 125		

(1) The marketing status values are defined as follows:
ACTIVE: Product device recommended for new designs.
LIFEBUY: TI has announced that the device will be discontinued, and a lifetime-buy period is in effect.
NRND: Not recommended for new designs. Device is in production to support existing customers, but TI does not recommend using this part in a new design.
PREVIEW: Device has been announced but is not in production. Samples may or may not be available.
OBSOLETE: TI has discontinued the production of the device.

(2) Eco Plan - The planned eco-friendly classification: Pb-Free (RoHS), Pb-Free (RoHS Exempt), or Green (RoHS & no Sb/Br) - please check http://www.ti.com/productcontent for the latest availability information and additional product content details.
TBD: The Pb-Free/Green conversion plan has not been defined.
Pb-Free (RoHS): TI's terms "Lead-Free" or "Pb-Free" mean semiconductor products that are compatible with the current RoHS requirements for all 6 substances, including the requirement that lead not exceed 0.1% by weight in homogeneous materials. Where designed to be soldered at high temperatures, TI Pb-Free products are suitable for use in specified lead-free processes.
Pb-Free (RoHS Exempt): This component has a RoHS exemption for either 1) lead-based flip-chip solder bumps used between the die and package, or 2) lead-based die adhesive used between the die and leadframe. The component is otherwise considered Pb-Free (RoHS compatible) as defined above.
Green (RoHS & no Sb/Br): TI defines "Green" to mean Pb-Free (RoHS compatible), and free of Bromine (Br) and Antimony (Sb) based flame retardants (Br or Sb do not exceed 0.1% by weight in homogeneous material)

(3) MSL, Peak Temp. - The Moisture Sensitivity Level rating according to the JEDEC industry standard classifications, and peak solder temperature.

(4) There may be additional marking, which relates to the logo, the lot trace code information, or the environmental category on the device.

(5) Multiple Device Markings will be inside parentheses. Only one Device Marking contained in parentheses and separated by a "~" will appear on a device. If a line is indented then it is a continuation of the previous line and the two combined represent the entire Device Marking for that device.

(6) Lead/Ball Finish - Orderable Devices may have multiple material finish options. Finish options are separated by a vertical ruled line. Lead/Ball Finish values may wrap to two lines if the finish value exceeds the maximum column width.

Important Information and Disclaimer: The information provided on this page represents TI's knowledge and belief as of the date that it is provided. TI bases its knowledge and belief on information provided by third parties, and makes no representation or warranty as to the accuracy of such information. Efforts are underway to better integrate information from third parties. TI has taken and continues to take reasonable steps to provide representative and accurate information but may not have conducted destructive testing or chemical analysis on incoming materials and chemicals. TI and TI suppliers consider certain information to be proprietary, and thus CAS numbers and other limited information may not be available for release.

In no event shall TI's liability arising out of such information exceed the total purchase price of the TI part(s) at issue in this document sold by TI to Customer on an annual basis.

OTHER QUALIFIED VERSIONS OF SN54150, SN54LS151, SN54S15, SN54S151, SN74150, SN74LS151, SN74S151 :

- Catalog: SN74150, SN74LS151, SN74S15, SN74S151
- Military: SN54150, SN54LS151, SN54S151

NOTE: Qualified Version Definitions:

- Catalog - TI's standard catalog product
- Military - QML certified for Military and Defense Applications

TAPE AND REEL INFORMATION

REEL DIMENSIONS

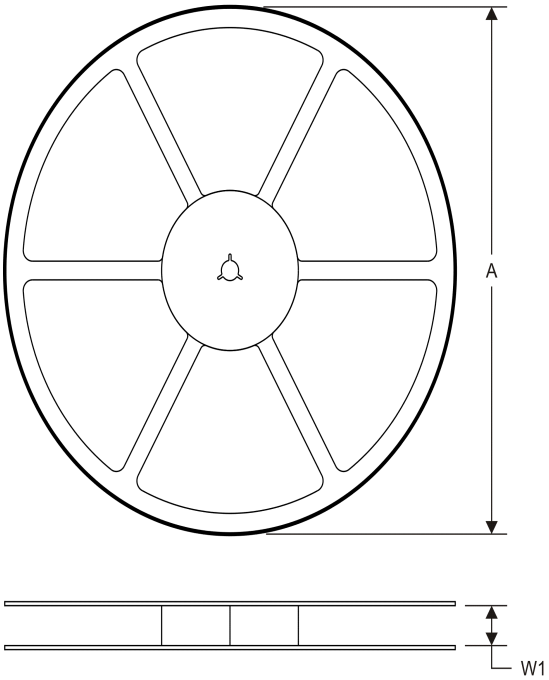

TAPE DIMENSIONS

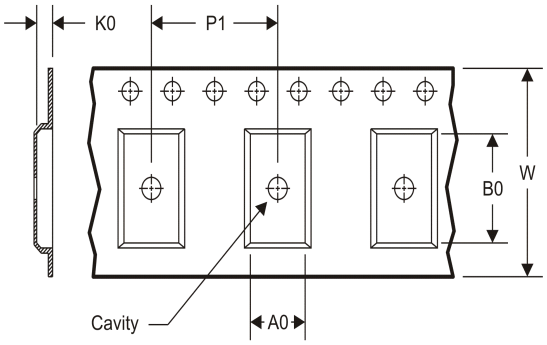

A0	Dimension designed to accommodate the component width
B0	Dimension designed to accommodate the component length
K0	Dimension designed to accommodate the component thickness
W	Overall width of the carrier tape
P1	Pitch between successive cavity centers

TAPE AND REEL INFORMATION

*All dimensions are nominal

Device	Package Type	Package Drawing	Pins	SPQ	Reel Diameter (mm)	Reel Width W1 (mm)	A0 (mm)	B0 (mm)	K0 (mm)	P1 (mm)	W (mm)	Pin1 Quadrant
SN74LS151DR	SOIC	D	16	2500	330.0	16.4	6.5	10.3	2.1	8.0	16.0	Q1
SN74LS151NSR	SO	NS	16	2000	330.0	16.4	8.2	10.5	2.5	12.0	16.0	Q1

TAPE AND REEL BOX DIMENSIONS

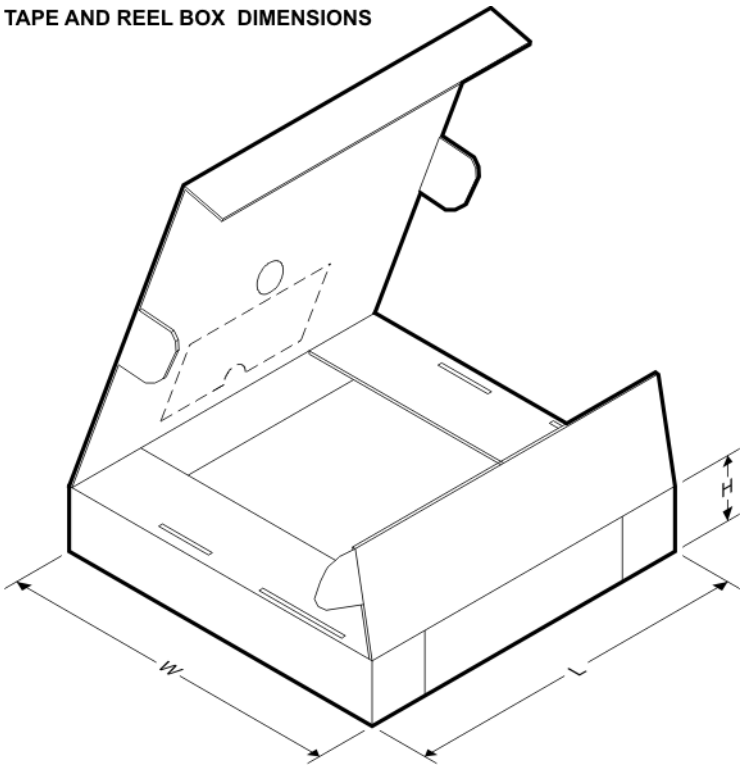

*All dimensions are nominal

Device	Package Type	Package Drawing	Pins	SPQ	Length (mm)	Width (mm)	Height (mm)
SN74LS151DR	SOIC	D	16	2500	333.2	345.9	28.6
SN74LS151NSR	SO	NS	16	2000	367.0	367.0	38.0

J (R-GDIP-T**) CERAMIC DUAL-IN-LINE PACKAGE

24 PINS SHOWN

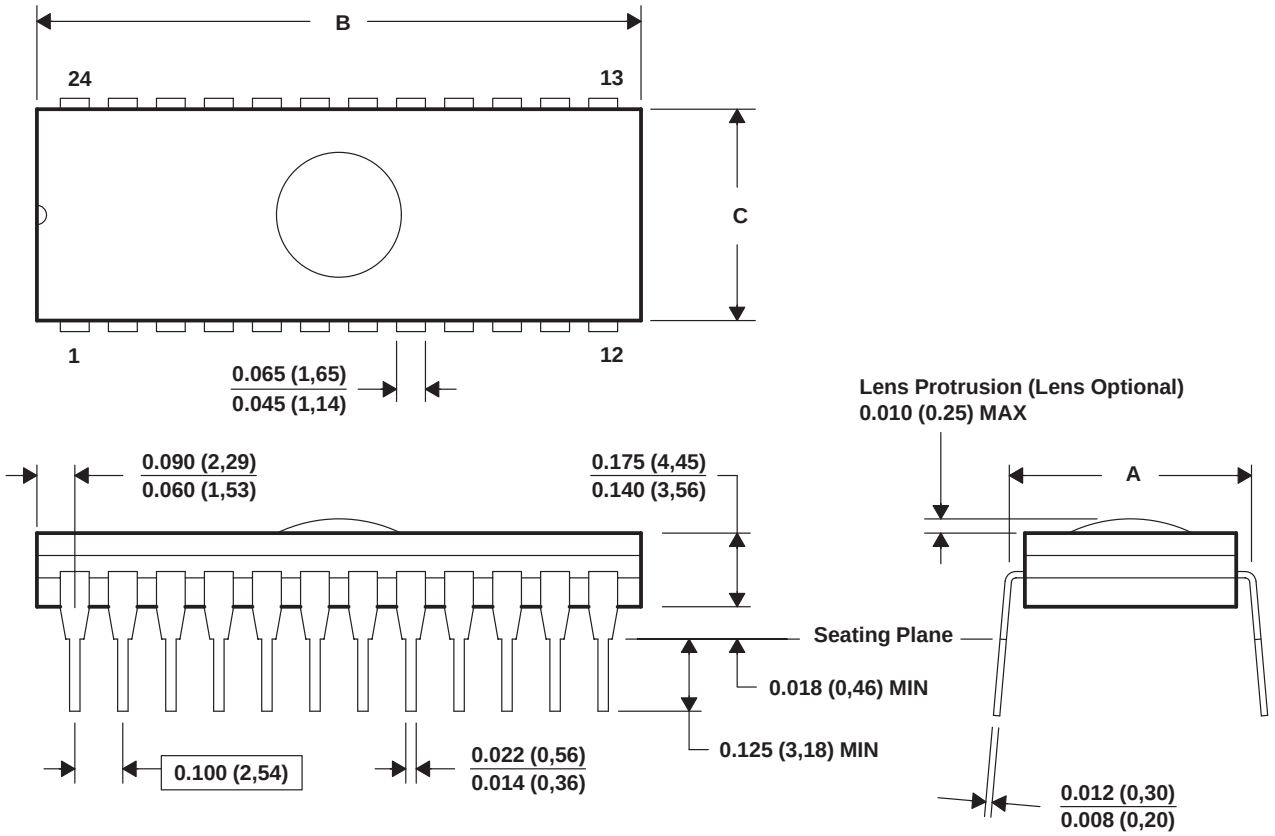

DIM	PINS **	24		28		32		40	
		NARR	WIDE	NARR	WIDE	NARR	WIDE	NARR	WIDE
"A"	MAX	0.624(15,85)	0.624(15,85)	0.624(15,85)	0.624(15,85)	0.624(15,85)	0.624(15,85)	0.624(15,85)	0.624(15,85)
	MIN	0.590(14,99)	0.590(14,99)	0.590(14,99)	0.590(14,99)	0.590(14,99)	0.590(14,99)	0.590(14,99)	0.590(14,99)
"B"	MAX	1.265(32,13)	1.265(32,13)	1.465(37,21)	1.465(37,21)	1.668(42,37)	1.668(42,37)	2.068(52,53)	2.068(52,53)
	MIN	1.235(31,37)	1.235(31,37)	1.435(36,45)	1.435(36,45)	1.632(41,45)	1.632(41,45)	2.032(51,61)	2.032(51,61)
"C"	MAX	0.541(13,74)	0.598(15,19)	0.541(13,74)	0.598(15,19)	0.541(13,74)	0.598(15,19)	0.541(13,74)	0.598(15,19)
	MIN	0.514(13,06)	0.571(14,50)	0.514(13,06)	0.571(14,50)	0.514(13,06)	0.571(14,50)	0.514(13,06)	0.571(14,50)

4040084/C 10/97

NOTES:
A. All linear dimensions are in inches (millimeters).
B. This drawing is subject to change without notice.
C. Window (lens) added to this group of packages (24-, 28-, 32-, 40-pin).
D. This package can be hermetically sealed with a ceramic lid using glass frit.
E. Index point is provided on cap for terminal identification.

J (R–GDIP–T**) CERAMIC DUAL IN–LINE PACKAGE

14 LEADS SHOWN

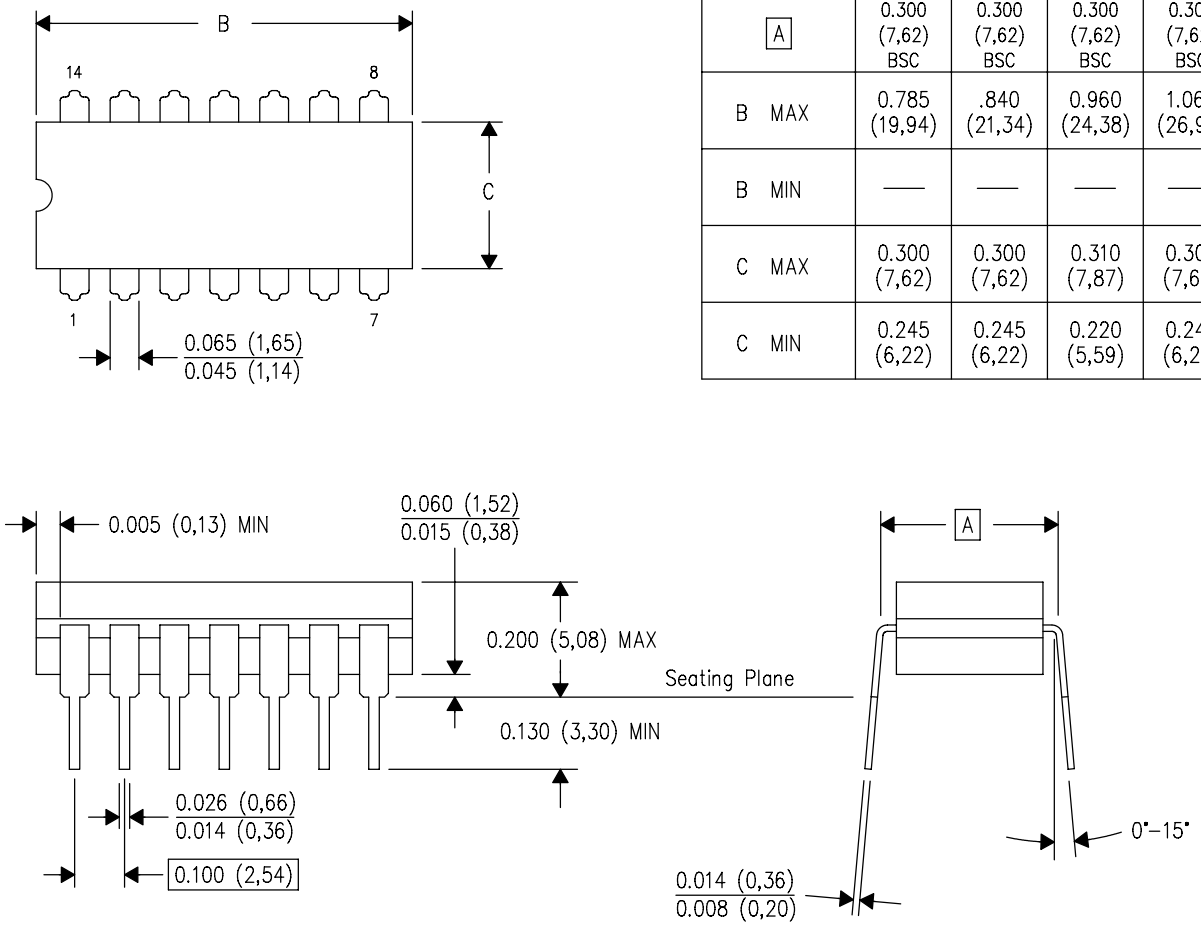

DIM \ PINS **	14	16	18	20
A	0.300 (7,62) BSC	0.300 (7,62) BSC	0.300 (7,62) BSC	0.300 (7,62) BSC
B MAX	0.785 (19,94)	.840 (21,34)	0.960 (24,38)	1.060 (26,92)
B MIN	—	—	—	—
C MAX	0.300 (7,62)	0.300 (7,62)	0.310 (7,87)	0.300 (7,62)
C MIN	0.245 (6,22)	0.245 (6,22)	0.220 (5,59)	0.245 (6,22)

4040083/F 03/03

NOTES:
- A. All linear dimensions are in inches (millimeters).
- B. This drawing is subject to change without notice.
- C. This package is hermetically sealed with a ceramic lid using glass frit.
- D. Index point is provided on cap for terminal identification only on press ceramic glass frit seal only.
- E. Falls within MIL STD 1835 GDIP1–T14, GDIP1–T16, GDIP1–T18 and GDIP1–T20.

W (R–GDFP–F16) CERAMIC DUAL FLATPACK

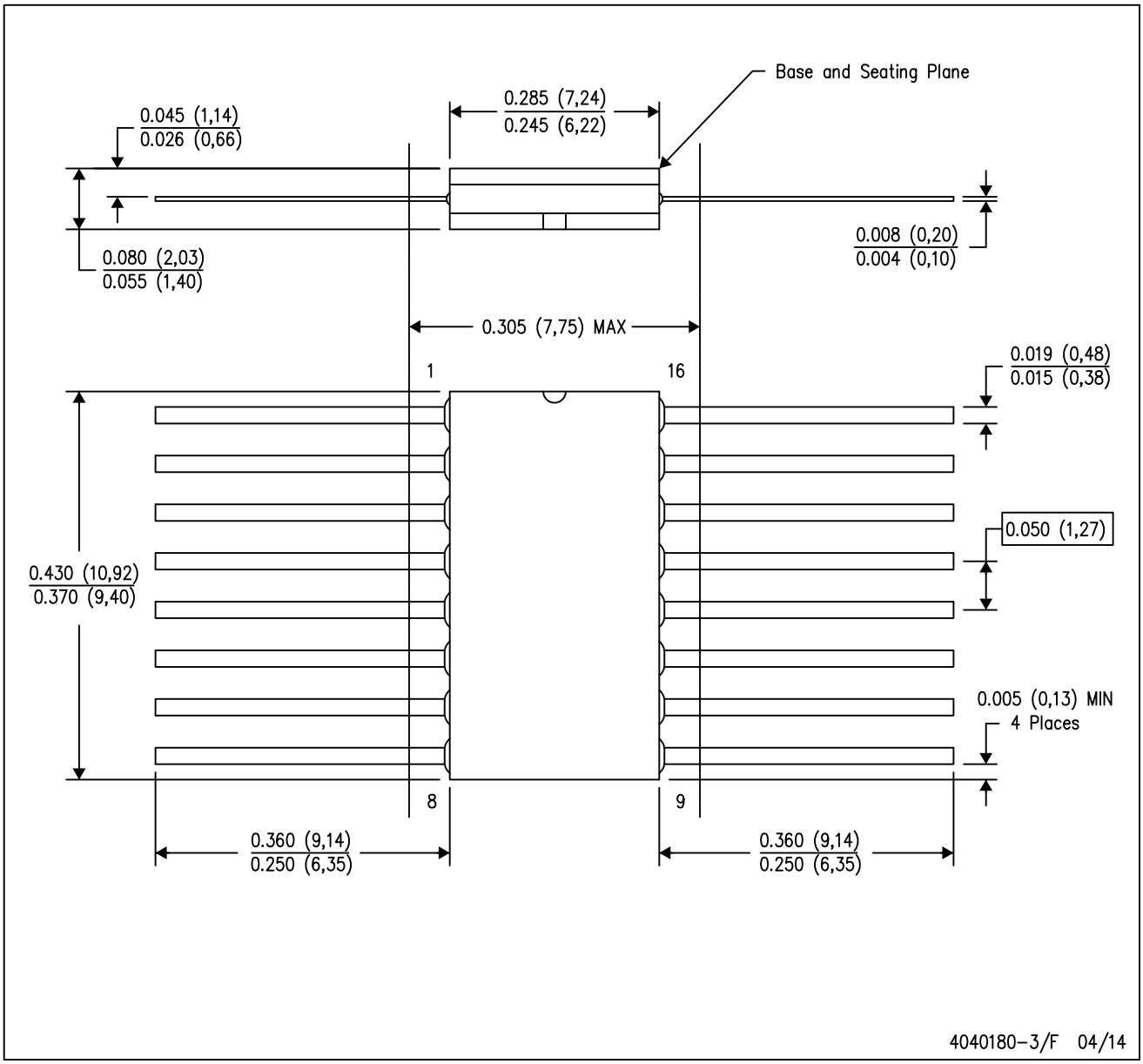

NOTES:
A. All linear dimensions are in inches (millimeters).
B. This drawing is subject to change without notice.
C. This package can be hermetically sealed with a ceramic lid using glass frit.
D. Index point is provided on cap for terminal identification only.
E. Falls within MIL STD 1835 GDFP2–F16

W (R–GDFP–F24) CERAMIC DUAL FLATPACK

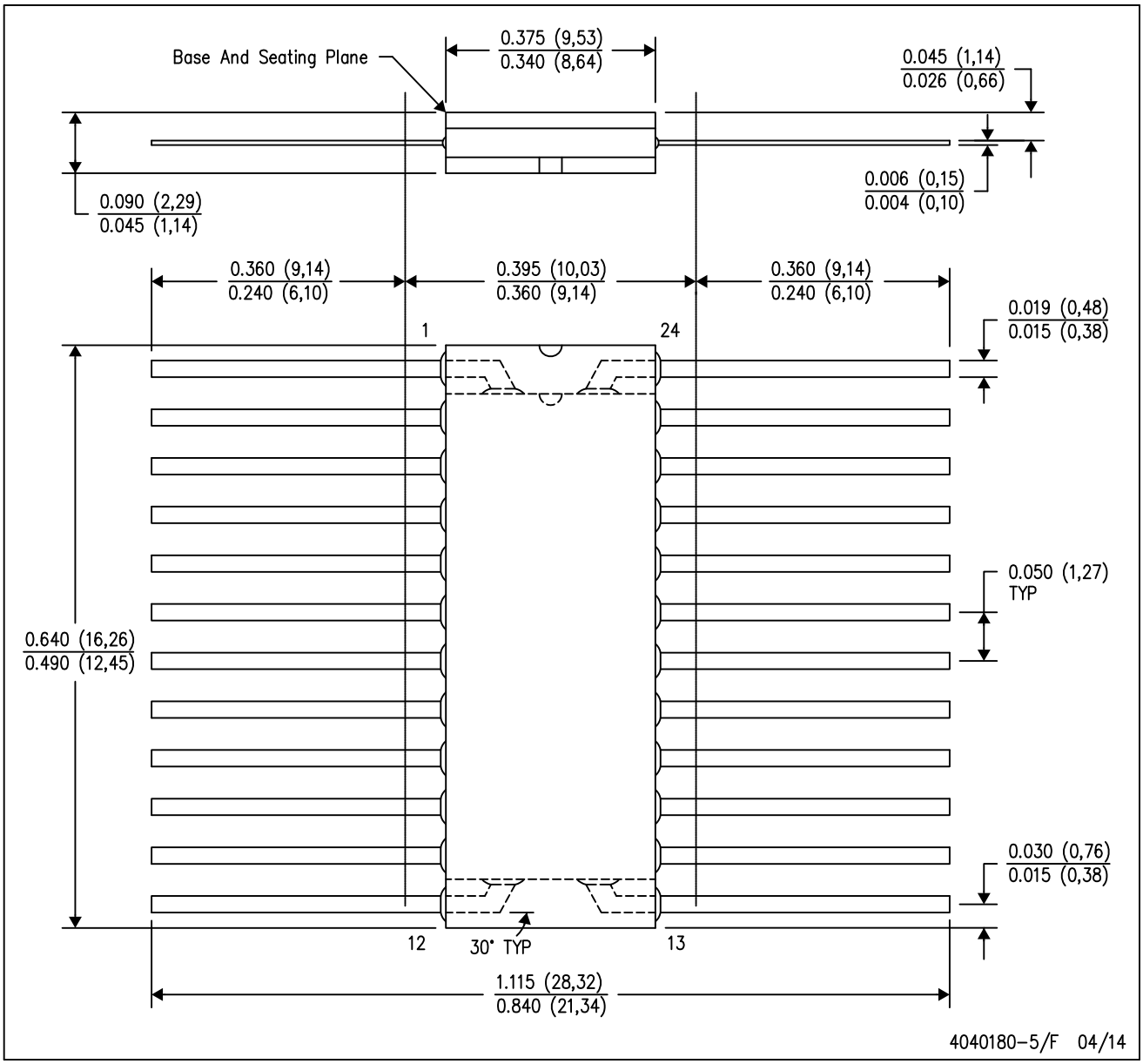

NOTES:
A. All linear dimensions are in inches (millimeters).
B. This drawing is subject to change without notice.
C. This package can be hermetically sealed with a ceramic lid using glass frit.
D. Index point is provided on cap for terminal identification only.
E. Falls within Mil–Std 1835 GDFP2–F20

FK (S–CQCC–N**) LEADLESS CERAMIC CHIP CARRIER

28 TERMINAL SHOWN

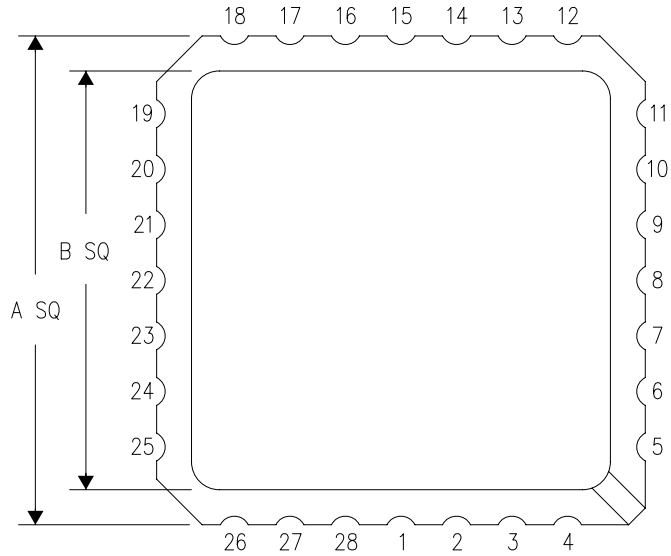

NO. OF TERMINALS **	A		B	
	MIN	MAX	MIN	MAX
20	0.342 (8,69)	0.358 (9,09)	0.307 (7,80)	0.358 (9,09)
28	0.442 (11,23)	0.458 (11,63)	0.406 (10,31)	0.458 (11,63)
44	0.640 (16,26)	0.660 (16,76)	0.495 (12,58)	0.560 (14,22)
52	0.740 (18,78)	0.761 (19,32)	0.495 (12,58)	0.560 (14,22)
68	0.938 (23,83)	0.962 (24,43)	0.850 (21,6)	0.858 (21,8)
84	1.141 (28,99)	1.165 (29,59)	1.047 (26,6)	1.063 (27,0)

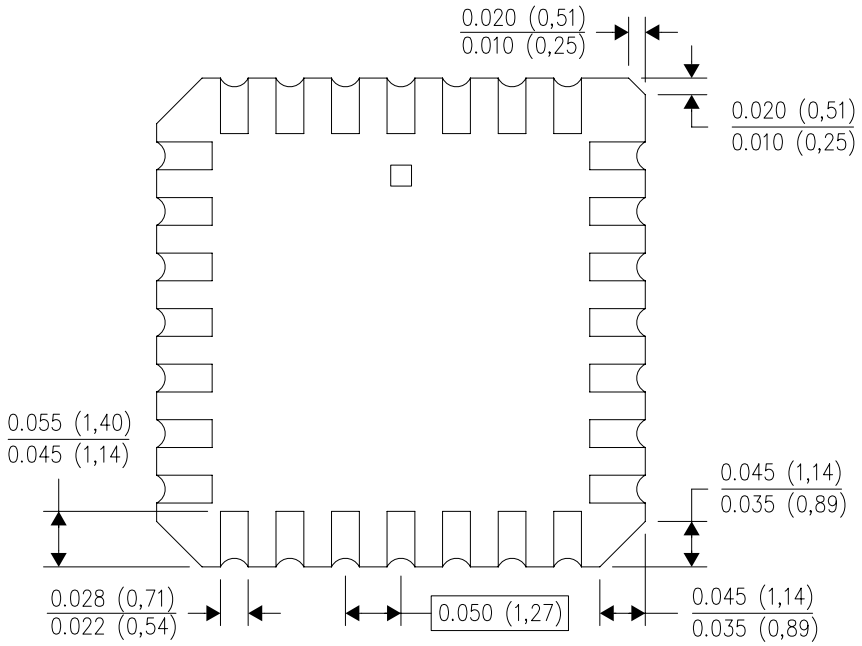

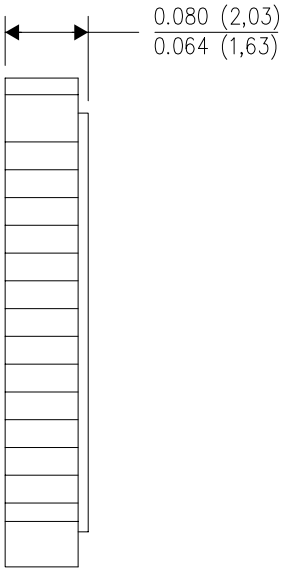

4040140/D 01/11

NOTES:
A. All linear dimensions are in inches (millimeters).
B. This drawing is subject to change without notice.
C. This package can be hermetically sealed with a metal lid.
D. Falls within JEDEC MS–004

N (R–PDIP–T**) PLASTIC DUAL–IN–LINE PACKAGE

16 PINS SHOWN

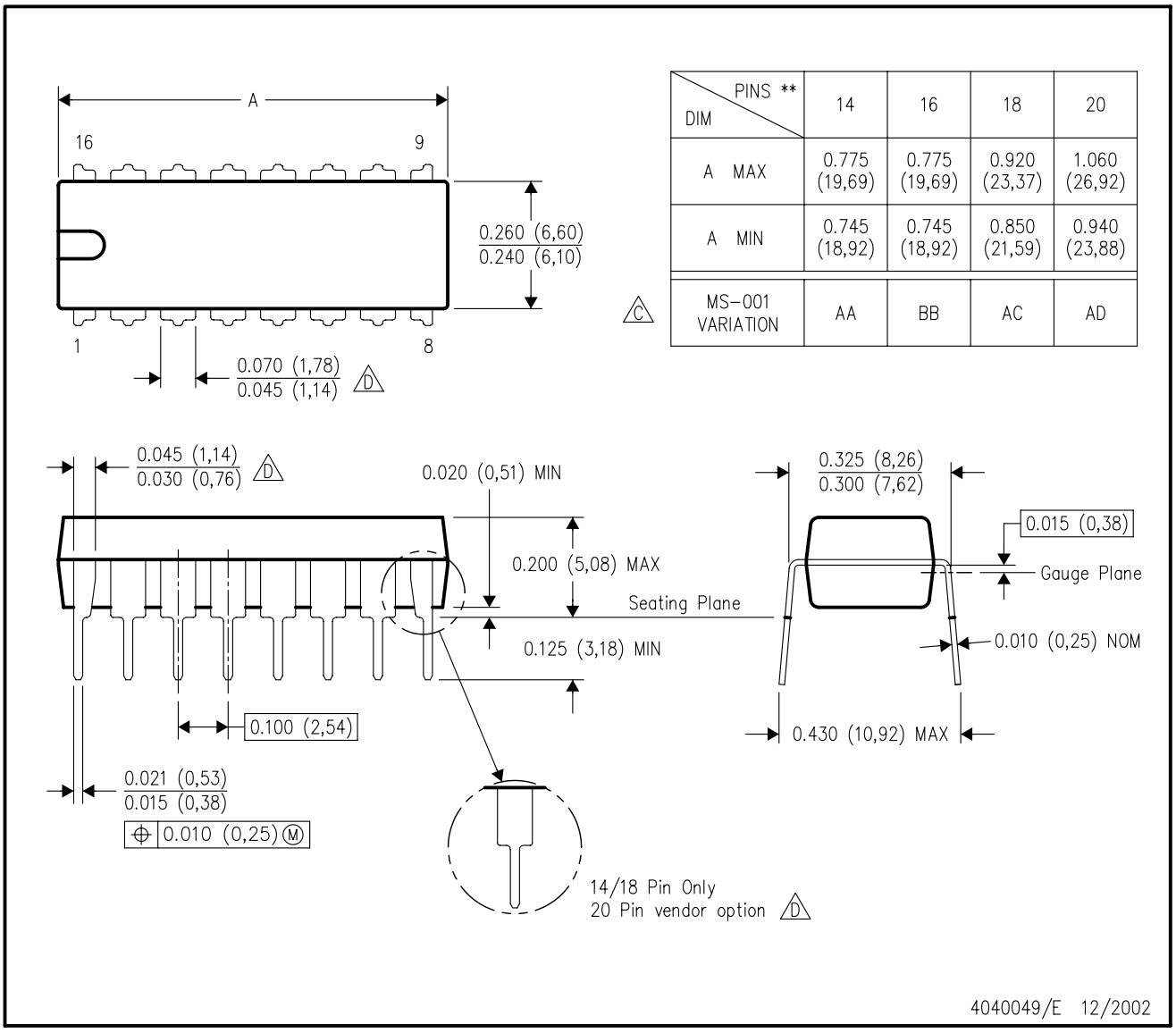

DIM \ PINS **	14	16	18	20
A MAX	0.775 (19,69)	0.775 (19,69)	0.920 (23,37)	1.060 (26,92)
A MIN	0.745 (18,92)	0.745 (18,92)	0.850 (21,59)	0.940 (23,88)
MS–001 VARIATION (C)	AA	BB	AC	AD

NOTES:
A. All linear dimensions are in inches (millimeters).
B. This drawing is subject to change without notice.
C. Falls within JEDEC MS–001, except 18 and 20 pin minimum body length (Dim A).
D. The 20 pin end lead shoulder width is a vendor option, either half or full width.

N (R-PDIP-T)** **PLASTIC DUAL-IN-LINE PACKAGE**

24 PIN SHOWN

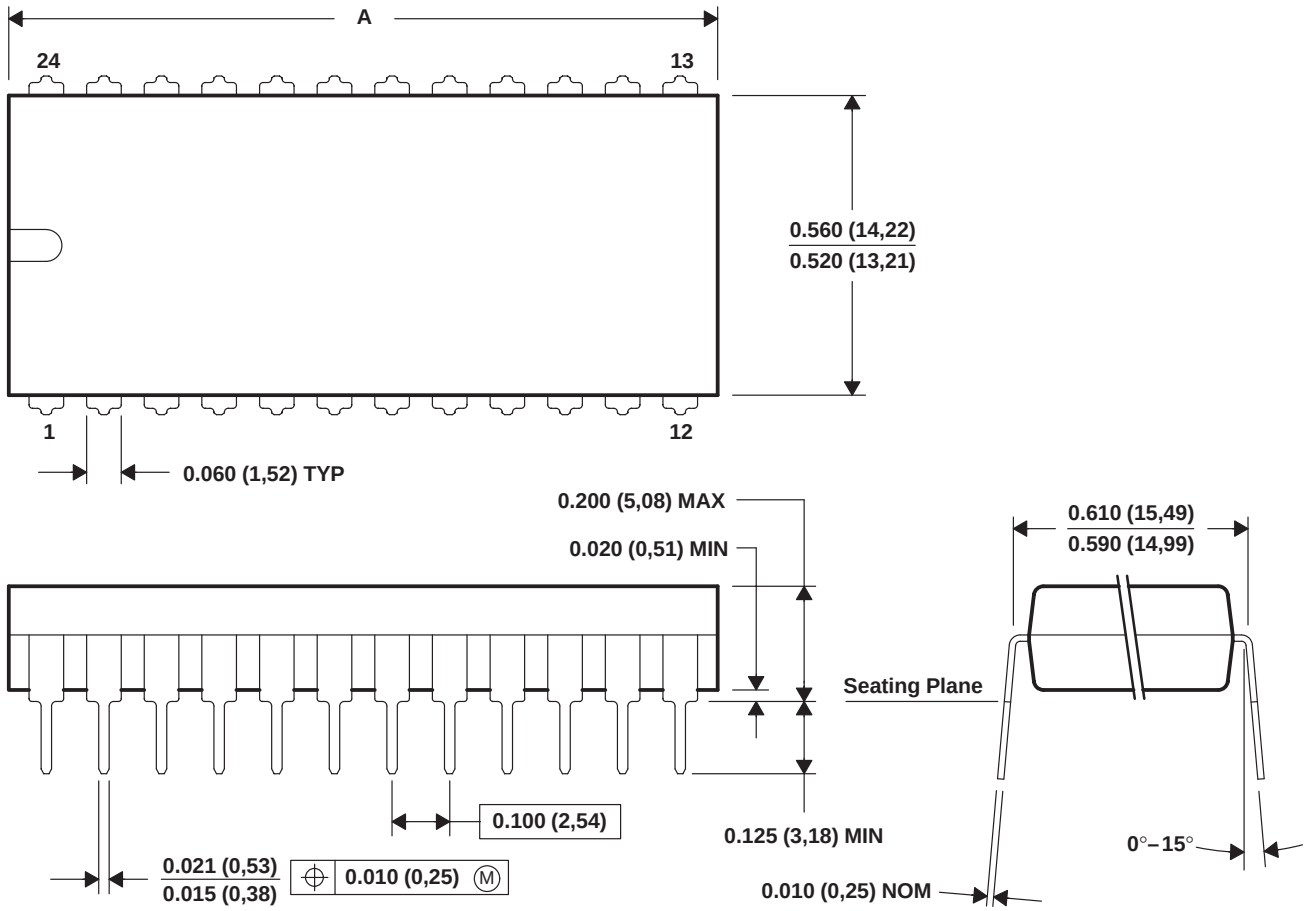

DIM \ PINS **	24	28	32	40	48	52
A MAX	1.270 (32,26)	1.450 (36,83)	1.650 (41,91)	2.090 (53,09)	2.450 (62,23)	2.650 (67,31)
A MIN	1.230 (31,24)	1.410 (35,81)	1.610 (40,89)	2.040 (51,82)	2.390 (60,71)	2.590 (65,79)

4040053/B 04/95

NOTES: A. All linear dimensions are in inches (millimeters).
B. This drawing is subject to change without notice.
C. Falls within JEDEC MS-011
D. Falls within JEDEC MS-015 (32 pin only)

D (R–PDSO–G16) PLASTIC SMALL OUTLINE

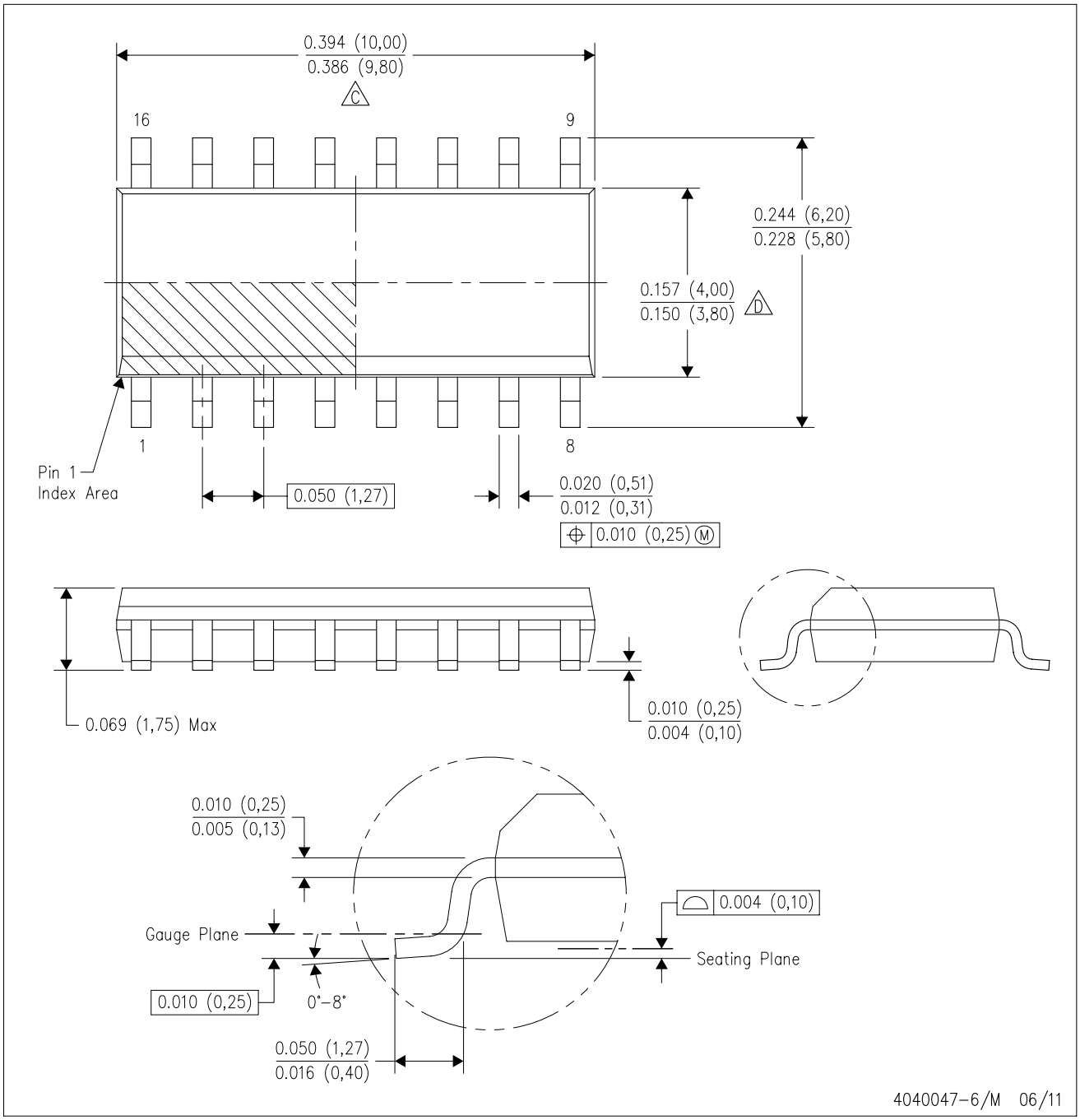

NOTES:
A. All linear dimensions are in inches (millimeters).
B. This drawing is subject to change without notice.
C. Body length does not include mold flash, protrusions, or gate burrs. Mold flash, protrusions, or gate burrs shall not exceed 0.006 (0,15) each side.
D. Body width does not include interlead flash. Interlead flash shall not exceed 0.017 (0,43) each side.
E. Reference JEDEC MS–012 variation AC.

D (R–PDSO–G16) PLASTIC SMALL OUTLINE

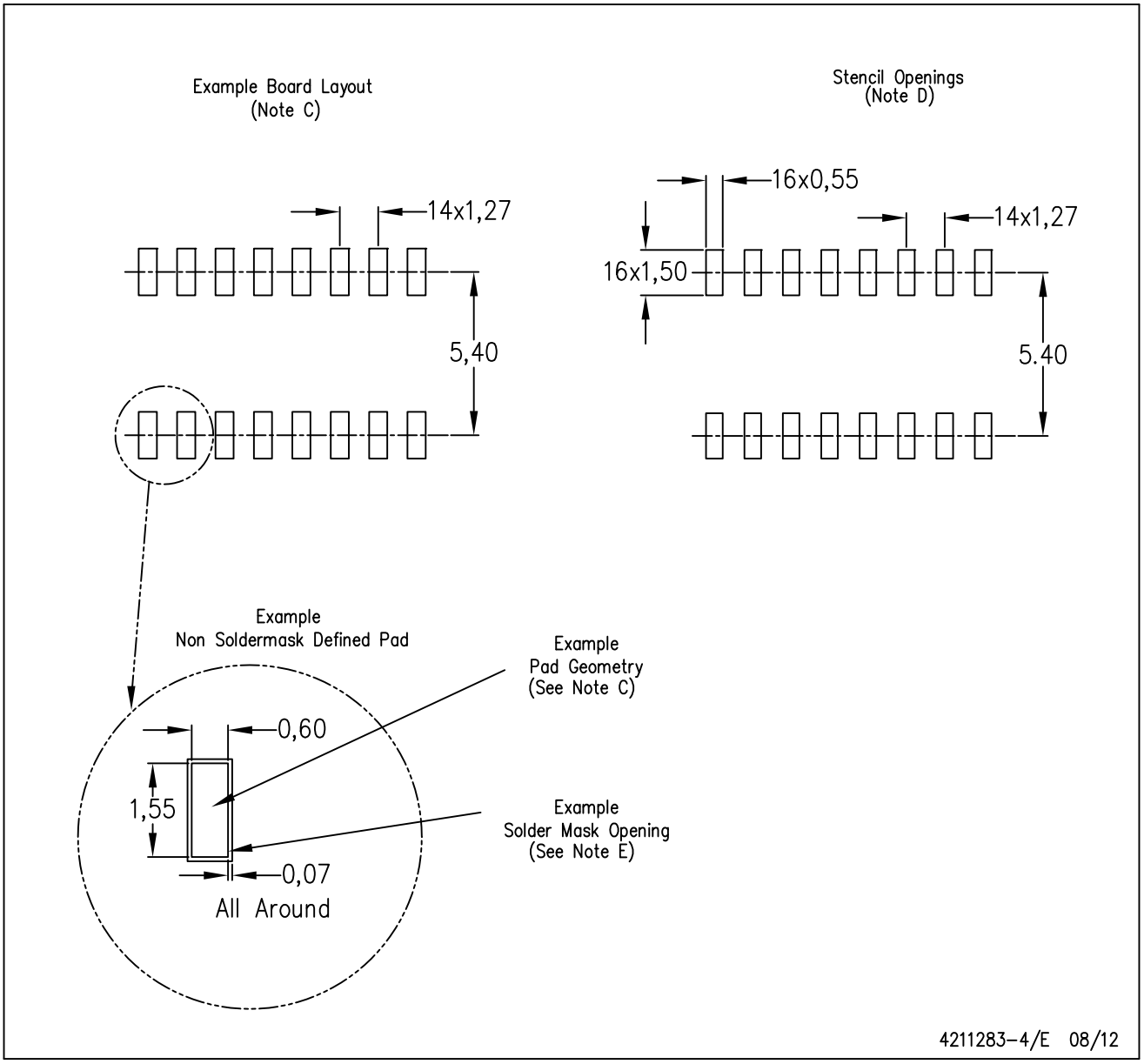

NOTES:
A. All linear dimensions are in millimeters.
B. This drawing is subject to change without notice.
C. Publication IPC–7351 is recommended for alternate designs.
D. Laser cutting apertures with trapezoidal walls and also rounding corners will offer better paste release. Customers should contact their board assembly site for stencil design recommendations. Refer to IPC–7525 for other stencil recommendations.
E. Customers should contact their board fabrication site for solder mask tolerances between and around signal pads.

MECHANICAL DATA

NS (R-PDSO-G)** **PLASTIC SMALL-OUTLINE PACKAGE**

14-PINS SHOWN

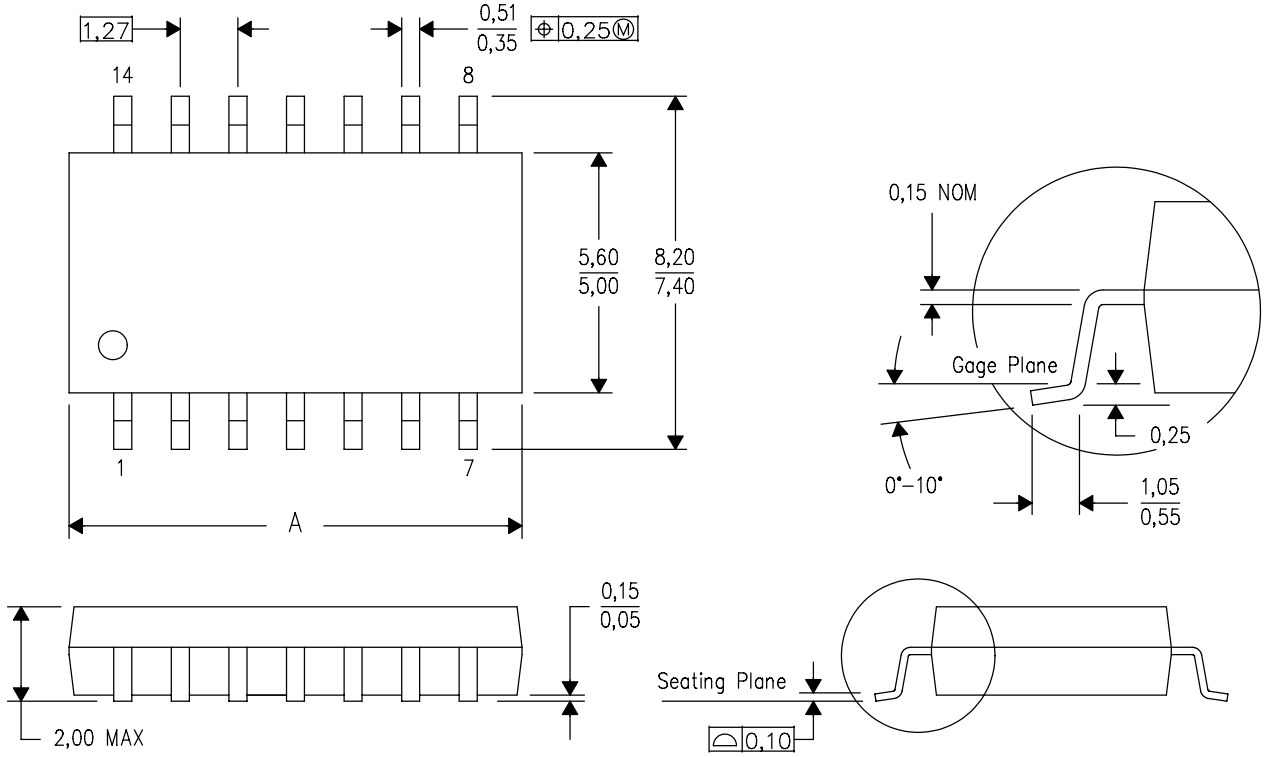

DIM \ PINS **	14	16	20	24
A MAX	10,50	10,50	12,90	15,30
A MIN	9,90	9,90	12,30	14,70

4040062/C 03/03

NOTES:
A. All linear dimensions are in millimeters.
B. This drawing is subject to change without notice.
C. Body dimensions do not include mold flash or protrusion, not to exceed 0,15.

IMPORTANT NOTICE

Texas Instruments Incorporated and its subsidiaries (TI) reserve the right to make corrections, enhancements, improvements and other changes to its semiconductor products and services per JESD46, latest issue, and to discontinue any product or service per JESD48, latest issue. Buyers should obtain the latest relevant information before placing orders and should verify that such information is current and complete. All semiconductor products (also referred to herein as “components”) are sold subject to TI’s terms and conditions of sale supplied at the time of order acknowledgment.

TI warrants performance of its components to the specifications applicable at the time of sale, in accordance with the warranty in TI’s terms and conditions of sale of semiconductor products. Testing and other quality control techniques are used to the extent TI deems necessary to support this warranty. Except where mandated by applicable law, testing of all parameters of each component is not necessarily performed.

TI assumes no liability for applications assistance or the design of Buyers’ products. Buyers are responsible for their products and applications using TI components. To minimize the risks associated with Buyers’ products and applications, Buyers should provide adequate design and operating safeguards.

TI does not warrant or represent that any license, either express or implied, is granted under any patent right, copyright, mask work right, or other intellectual property right relating to any combination, machine, or process in which TI components or services are used. Information published by TI regarding third-party products or services does not constitute a license to use such products or services or a warranty or endorsement thereof. Use of such information may require a license from a third party under the patents or other intellectual property of the third party, or a license from TI under the patents or other intellectual property of TI.

Reproduction of significant portions of TI information in TI data books or data sheets is permissible only if reproduction is without alteration and is accompanied by all associated warranties, conditions, limitations, and notices. TI is not responsible or liable for such altered documentation. Information of third parties may be subject to additional restrictions.

Resale of TI components or services with statements different from or beyond the parameters stated by TI for that component or service voids all express and any implied warranties for the associated TI component or service and is an unfair and deceptive business practice. TI is not responsible or liable for any such statements.

Buyer acknowledges and agrees that it is solely responsible for compliance with all legal, regulatory and safety-related requirements concerning its products, and any use of TI components in its applications, notwithstanding any applications-related information or support that may be provided by TI. Buyer represents and agrees that it has all the necessary expertise to create and implement safeguards which anticipate dangerous consequences of failures, monitor failures and their consequences, lessen the likelihood of failures that might cause harm and take appropriate remedial actions. Buyer will fully indemnify TI and its representatives against any damages arising out of the use of any TI components in safety-critical applications.

In some cases, TI components may be promoted specifically to facilitate safety-related applications. With such components, TI’s goal is to help enable customers to design and create their own end-product solutions that meet applicable functional safety standards and requirements. Nonetheless, such components are subject to these terms.

No TI components are authorized for use in FDA Class III (or similar life-critical medical equipment) unless authorized officers of the parties have executed a special agreement specifically governing such use.

Only those TI components which TI has specifically designated as military grade or “enhanced plastic” are designed and intended for use in military/aerospace applications or environments. Buyer acknowledges and agrees that any military or aerospace use of TI components which have ***not*** been so designated is solely at the Buyer's risk, and that Buyer is solely responsible for compliance with all legal and regulatory requirements in connection with such use.

TI has specifically designated certain components as meeting ISO/TS16949 requirements, mainly for automotive use. In any case of use of non-designated products, TI will not be responsible for any failure to meet ISO/TS16949.

Products		**Applications**	
Audio	www.ti.com/audio	Automotive and Transportation	www.ti.com/automotive
Amplifiers	amplifier.ti.com	Communications and Telecom	www.ti.com/communications
Data Converters	dataconverter.ti.com	Computers and Peripherals	www.ti.com/computers
DLP® Products	www.dlp.com	Consumer Electronics	www.ti.com/consumer-apps
DSP	dsp.ti.com	Energy and Lighting	www.ti.com/energy
Clocks and Timers	www.ti.com/clocks	Industrial	www.ti.com/industrial
Interface	interface.ti.com	Medical	www.ti.com/medical
Logic	logic.ti.com	Security	www.ti.com/security
Power Mgmt	power.ti.com	Space, Avionics and Defense	www.ti.com/space-avionics-defense
Microcontrollers	microcontroller.ti.com	Video and Imaging	www.ti.com/video
RFID	www.ti-rfid.com		
OMAP Applications Processors	www.ti.com/omap	**TI E2E Community**	e2e.ti.com
Wireless Connectivity	www.ti.com/wirelessconnectivity		

Mailing Address: Texas Instruments, Post Office Box 655303, Dallas, Texas 75265
Copyright © 2015, Texas Instruments Incorporated