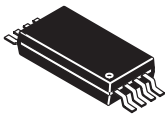

SLUS581 − FEBRUARY 2004

POWER MONITORING AND SWITCHING CONTROLLER FOR 3.3-V SRAM

FEATURES

- **Power Monitoring and Switching for Non-Volatile Control of SRAMs**
- **Input Decoder Allows Control of 1 or 2 Banks of SRAM**
- **Write-Protect Control**
- **3-V Primary Cell Input**
- **3.3-V Operation**
- **Reset Output for System Power-On Reset**
- **Less than 20-ns Chip Enable Propagation Delay**
- **Small 16-Lead TSSOP Package**

APPLICATIONS

- **NVSRAM Modules**
- **Point-of-Sale Systems**
- **Facsimile, Printers and Photocopiers**
- **Internet Appliances**
- **Servers**
- **Medical Instrumentation and Industrial Products**

DESCRIPTION

The CMOS bq2205 SRAM non-volatile controller with reset provides all the necessary functions for converting one or two banks of standard CMOS SRAM into non-volatile read/write memory.

A precision comparator monitors the 3.3-V VCC input for an out-of-tolerance condition. When out-of-tolerance is detected, the two conditioned chip-enable outputs are forced inactive to write-protect both banks of SRAM.

Power for the external SRAMs, VOUT, is switched from the VCC supply to the battery-backup supply as VCC decays. On a subsequent power-up, the VOUT supply is automatically switched from the backup supply to the VCC supply. The external SRAMs are write-protected until a power-valid condition exists. The reset output provides power-fail and power-on resets for the system. During power-valid operation, the input decoder, A, selects one of two banks of SRAM.

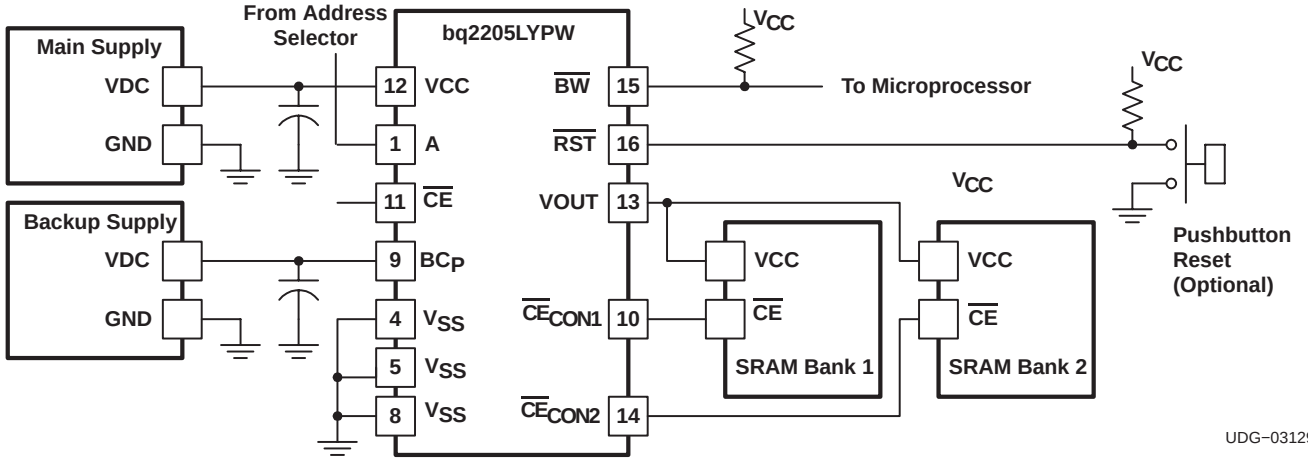

Please be aware that an important notice concerning availability, standard warranty, and use in critical applications of Texas Instruments semiconductor products and disclaimers thereto appears at the end of this data sheet.

PRODUCTION DATA information is current as of publication date. Products conform to specifications per the terms of Texas Instruments standard warranty. Production processing does not necessarily include testing of all parameters.

Copyright © 2004, Texas Instruments Incorporated

These devices have limited built-in ESD protection. The leads should be shorted together or the device placed in conductive foam during storage or handling to prevent electrostatic damage to the MOS gates.

ORDERING INFORMATION

T_A	OPERATION	PART NUMBER(1)	SYMBOL
−20°C to 70°C	3.3 V	bq2205LYPW	bq2205LY

(1) The PW package is available taped and reeled. Add an R suffix to the device type (i.e. bq2205LYPWR) to order quantities of 2,000 devices per reel.

ABSOLUTE MAXIMUM RATINGS

over operating free-air temperature range unless otherwise noted(2)

		bq2205LY	UNIT
Input voltage range	V_{CC}, (wrt V_{SS})	−0.3 to 6.0	V
	BC_P, (wrt V_{SS})	−0.3 to 4.5	
	all other pins, (wrt V_{SS})	−0.3 to VCC + 0.3	
Operating temperature range, T_A		−20 to 70	°C
Storage temperature, T_{stg}		−55 to 125	
Temperature under bias, T_{Jbias}		−40 to 85	
Lead temperature 1,6 mm (1/16 inch) from case for 10 seconds		300	

(2) Stresses beyond those listed under “absolute maximum ratings” may cause permanent damage to the device. These are stress ratings only, and functional operation of the device at these or any other conditions beyond those indicated under “recommended operating conditions” is not implied. Exposure to absolute-maximum-rated conditions for extended periods may affect device reliability.

RECOMMENDED OPERATING CONDITIONS

	MIN	MAX	UNIT
Supply voltage, V_{CC}	3.0	3.6	V
Supply voltage from backup cell, V_{BC}	2.0	4.0	
Low-level input voltage, V_{IL}	−0.3	0.8	
High-level input voltage, V_{IH}	2.2	V_{CC} + 0.3	
$\overline{RST}$ low-level input voltage, V_{IL}	−0.3	0.4	
$\overline{RST}$ high-level input voltage, V_{IH}	2.2	V_{CC} + 0.3	
Operating temperature range, T_A	−20	70	°C

ELECTRICAL CHARACTERISTICS

(T_A = 25°C, $V_{CC(min)} \le V_{CC} \le V_{CC(max)}$ unless otherwise noted)

PARAMETER	TEST CONDITIONS	MIN	TYP	MAX	UNIT
VCC supply current, $I_{CC(vcc)}$	$V_{CC} > V_{CC(MIN)}$ $\overline{CE}$ = low $\overline{CE}_{CONX}$ = 0 mA		210	500	µA
Backup Battery Supply Current, $I_{CC(BC)}$	$V_{BC} > V_{BC(MIN)}$, V_{CC} = 0 V $\overline{CE}$ = low $\overline{CE}_{CONX}$ = 0 mA		50	150	nA
Output voltage (VOUT)	$I_{(VOUT)}$ = 80 mA, $V_{CC} > V_{(SO)}$	Vcc−0.3			V
	$I_{(VOUT)}$= 100µ A, $V_{CC} < V_{(SO)}$	V_{BC}−0.3			
Power fail detect voltage, V_{PFD}		2.85	2.9	2.95	
Supply switch-over voltage, V_{SO}	$V_{BC} > V_{(PFD)}$		V_{PFD}		
	$V_{BC} < V_{(PFD)}$		V_{BC}		
$\overline{RST}$ output voltage	I($\overline{RST}$) = 1 mA			0.4	
$\overline{BW}$ output voltage	I($\overline{BW}$)= 1 mA			0.4	
Input leakage current on A and $\overline{CE}$ pins		−1		1	µA
Voh $\overline{CE}_{con1,2}$	Ioh = 0.5 mA		2.4		V
Vol $\overline{CE}_{con1,2}$	Iol = 2.0 mA		0.4		
Battery warning level V_{BW}	(1)			0.677xV_{CC}	
Capacitance					
Output capacitance	VOUT = 0 V			7	pF
Input capacitance	VOUT = 0 V			5	
Power-Down and Power-Up Timing, Refer to Figure 1 through 3					
VCC slew rate fall time, t_F	3.0 V to 0.0 V	300			µs
VCC slew rate rise time, t_R	V_{SO} to $V_{PFD(max)}$	100			
V_{PFD} to $\overline{RST}$ active, t_{RST} (reset active timeout period)		30		85	ms
Chip-enable recovery time, t_{CER}	(2)	30		85	
Chip-enable propagation delay time to external SRAM, t_{CED}	See Figure 2		15	25	ns
Push-button low time, t_{PBL}	$\overline{RST}$ pin		1		µs

(1) Battery warning level is detected on power up and the $\overline{BW}$ pin is latched at t_{CER} time after V_{CC} passes through V_{PFD} on power up.
(2) Time during which external SRAM is write protected after V_{CC} passes through V_{PFD} on power up.

AC TEST CONDITIONS, INPUT PULSE LEVELS 0 V ≤ V_{IN} ≤ 3 V, t_R = t_F = 5 NS

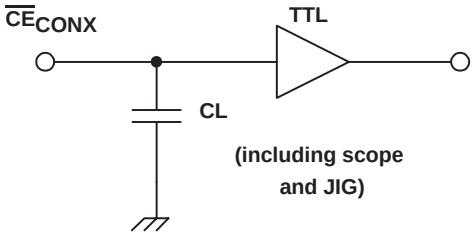

Figure 1. Output Load

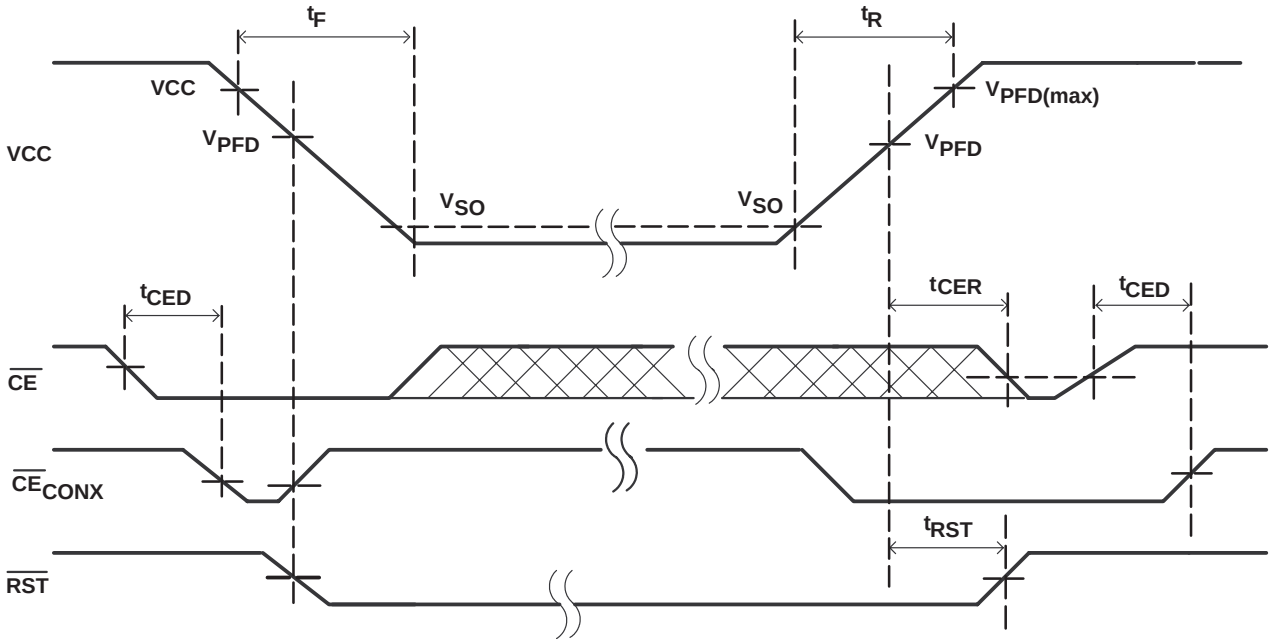

Figure 2. Power-Down/Power-Up Timing Diagram

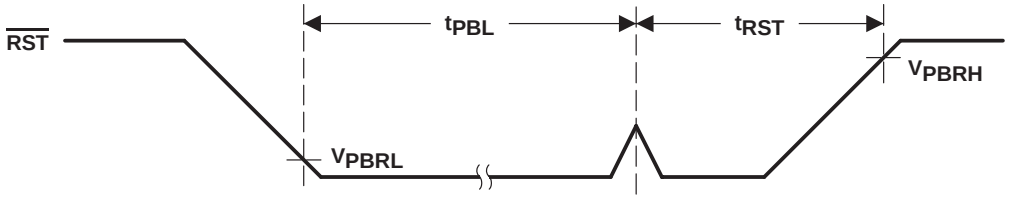

Figure 3. Push-Button Reset Timing

TERMINAL FUNCTIONS

NAME	TERMINAL	I/O	DESCRIPTION
	bq2205LY		
A	1	I	SRAM bank select input
BC_P	9	I	Backup supply input
$\overline{BW}$	15	O	Battery warning output (open-drain)
$\overline{CE}$	11	I	Chip enable input (active low)
$\overline{CE}_{CON1}$	10	O	Conditioned chip enable output 1
$\overline{CE}_{CON2}$	14	O	Conditioned chip enable output 2
N/C	2, 3, 6, 7	−	No connect. These pins must be left floating.
$\overline{RST}$	16	O	Power-up reset to system CPU output (open-drain)
V_{CC}	12	I	Main supply input
V_{OUT}	13	O	SRAM supply output
V_{SS}	4, 5, 8	−	Ground input

PW PACKAGE
(TOP VIEW)

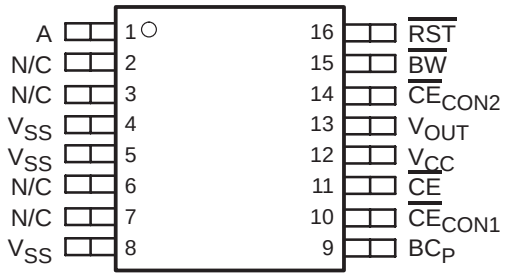

N/C no connection

FUNCTIONAL DESCRIPTION

Two banks of CMOS static RAM can be battery-backed using the VOUT and conditioned chip-enable output pins from the bq2205. As the voltage input VCC slews down during a power failure, the two-conditioned chip enable outputs, $\overline{CE}_{CON1}$ and $\overline{CE}_{CON2}$, are forced inactive independent of the chip enable input, $\overline{CE}$. This activity unconditionally write-protects the external SRAM as VCC falls to an out-of-tolerance threshold V_{PFD}. As the supply continues to fall past V_{PFD}, an internal switching device forces VOUT to the backup energy source. $\overline{CE}_{CON1}$ and $\overline{CE}_{CON2}$ are held high by the VOUT energy source.

During power-up, VOUT is switched back to the 3.3-V supply as VCC rises above the backup cell input voltage sourcing VOUT. Outputs $\overline{CE}_{CON1}$ and $\overline{CE}_{CON2}$ are held inactive for time t_{CER} after the power supply has reached V_{PFD}, independent of the $\overline{CE}$ input, to allow for processor stabilization.

During power-valid operation, the $\overline{CE}$ input is passed through to one of the two $\overline{CE}_{CONx}$ outputs with a propagation delay of less than t_{CED}. The $\overline{CE}$ input is output on one of the two $\overline{CE}_{CONx}$ output pins; depending on the level of bank select input A. See truth table below.

Table 1. Truth Table

INPUT		OUTPUT	
$\overline{CE}$	A	$\overline{CE}_{CON1}$	$\overline{CE}_{CON2}$
H	x	H	H
L	L	L	H
L	H	H	L

Bank select input A is usually tied to a high-order address pin so that a large nonvolatile memory can be designed using lower-density memory devices. Non-volatility and decoding are achieved by hardware hookup as shown in the application diagram.

The $\overline{RST}$ output can be used as the power-on reset for a microprocessor. Access to the external RAM may begin when $\overline{RST}$ returns inactive.

BATTERY BACKUP INPUT

Backup energy source, BC_P, input is provided on the bq2205 for use with an external primary cell. The primary cell input is designed to accept any 3-V primary battery (non-rechargeable), typically some type of lithium chemistry.

Power-Down and Power-Up Cycle

The bq2205 continuously monitors VCC for out-of-tolerance. During a power failure, when VCC falls below V_{PFD}, the bq2205 write-protects the external SRAM. The power source is switched to BC_P when V_{CC} is less than V_{PFD} and BC_P is greater than V_{PFD}, or when V_{CC} is less than BC_P and BC_P is less than V_{PFD}. When VCC is above V_{PFD}, the power source is V_{CC}. Write-protection continues for t_{CER} time after VCC rises above V_{PFD}.

An external CMOS static RAM is battery-backed using the VOUT and chip enable output pins from the bq2205. As the voltage input V_{CC} slews down during a power failure, the chip enable output, $\overline{CE}_{CONx}$, is forced inactive independent of the chip enable input $\overline{CE}$.

As the supply continues to fall past V_{PFD}, an internal switching device forces VOUT to the external backup energy source. $\overline{CE}_{CONx}$ is held high by the VOUT energy source.

FUNCTIONAL DESCRIPTION

During power up, VOUT is switched back to the main supply as VCC rises above the backup cell input voltage sourcing VOUT. If $V_{PFD} < BC_P$ on the bq2205 the switch to the main supply occurs at V_{PFD}. $\overline{CE}_{CONx}$ is held inactive for time t_{CER} after the power supply has reached V_{PFD}, independent of the $\overline{CE}$ input, to allow for processor stabilization.

Power-On Reset

The bq2205 provides a power-on reset, which pulls the $\overline{RST}$ pin low on power down and remains low on power up for t_{RST} after V_{CC} passes V_{PFD}. With valid battery voltage on BC_P, $\overline{RST}$ remains valid for $V_{CC} = V_{SS}$. The pull-up resistor on this pin should not exceed 10 kΩ if a push button reset is used.

Battery Low Warning

The bq2205 checks the battery voltage on power-up. The threshold for the battery warning comparator is V_{BW}, and a low level is sensed after power valid on each power up and latched after t_{CER} time. The latched value is presented at $\overline{BW}$ pin where a low indicates a low battery.

APPLICATION INFORMATION

PCB LAYOUT INFORMATION

It is important to pay special attention to the PCB layout. The following provides some guidelines:

- To obtain optimal performance, the decoupling capacitor from input terminals to V_{SS} should be placed as close as possible to the bq2205, with short trace runs to both signal and V_{SS} pins.
- All low-current V_{SS} connections should be kept separate from the high-current paths from the inputs supplies. Use a single-point ground technique incorporating both the small signal ground path and the power ground path.

MECHANICAL DATA

PW (R-PDSO-G)** **PLASTIC SMALL-OUTLINE PACKAGE**

14 PINS SHOWN

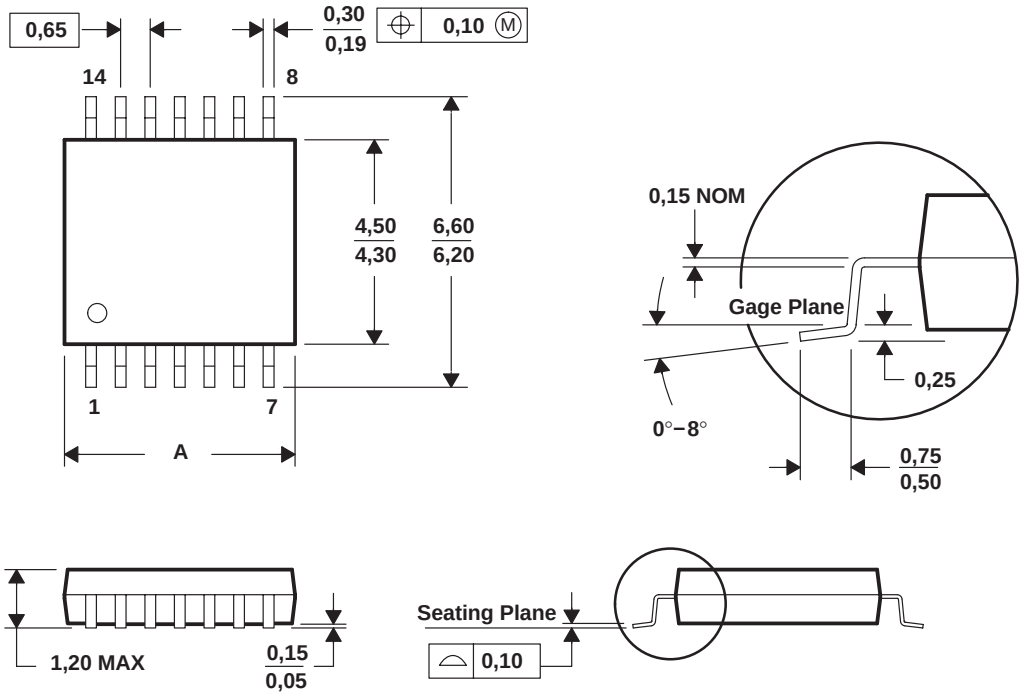

DIM \ PINS **	8	14	16	20	24	28
A MAX	3,10	5,10	5,10	6,60	7,90	9,80
A MIN	2,90	4,90	4,90	6,40	7,70	9,60

4040064/F 01/97

NOTES: A. All linear dimensions are in millimeters.
B. This drawing is subject to change without notice.
C. Body dimensions do not include mold flash or protrusion not to exceed 0,15.
D. Falls within JEDEC MO-153

PACKAGING INFORMATION

Orderable Device	Status (1)	Package Type	Package Drawing	Pins	Package Qty	Eco Plan (2)	Lead/Ball Finish	MSL Peak Temp (3)	Op Temp (°C)	Top-Side Markings (4)	Samples
BQ2205LYPW	ACTIVE	TSSOP	PW	16	90	Green (RoHS & no Sb/Br)	CU NIPDAU	Level-1-260C-UNLIM	-20 to 70	2205Y	Samples
BQ2205LYPWG4	ACTIVE	TSSOP	PW	16	90	Green (RoHS & no Sb/Br)	CU NIPDAU	Level-1-260C-UNLIM	-20 to 70	2205Y	Samples
BQ2205LYPWR	ACTIVE	TSSOP	PW	16	2000	Green (RoHS & no Sb/Br)	CU NIPDAU	Level-1-260C-UNLIM	-20 to 70	2205Y	Samples
BQ2205LYPWRG4	ACTIVE	TSSOP	PW	16	2000	Green (RoHS & no Sb/Br)	CU NIPDAU	Level-1-260C-UNLIM	-20 to 70	2205Y	Samples

(1) The marketing status values are defined as follows:
ACTIVE: Product device recommended for new designs.
LIFEBUY: TI has announced that the device will be discontinued, and a lifetime-buy period is in effect.
NRND: Not recommended for new designs. Device is in production to support existing customers, but TI does not recommend using this part in a new design.
PREVIEW: Device has been announced but is not in production. Samples may or may not be available.
OBSOLETE: TI has discontinued the production of the device.

(2) Eco Plan - The planned eco-friendly classification: Pb-Free (RoHS), Pb-Free (RoHS Exempt), or Green (RoHS & no Sb/Br) - please check http://www.ti.com/productcontent for the latest availability information and additional product content details.
TBD: The Pb-Free/Green conversion plan has not been defined.
Pb-Free (RoHS): TI's terms "Lead-Free" or "Pb-Free" mean semiconductor products that are compatible with the current RoHS requirements for all 6 substances, including the requirement that lead not exceed 0.1% by weight in homogeneous materials. Where designed to be soldered at high temperatures, TI Pb-Free products are suitable for use in specified lead-free processes.
Pb-Free (RoHS Exempt): This component has a RoHS exemption for either 1) lead-based flip-chip solder bumps used between the die and package, or 2) lead-based die adhesive used between the die and leadframe. The component is otherwise considered Pb-Free (RoHS compatible) as defined above.
Green (RoHS & no Sb/Br): TI defines "Green" to mean Pb-Free (RoHS compatible), and free of Bromine (Br) and Antimony (Sb) based flame retardants (Br or Sb do not exceed 0.1% by weight in homogeneous material)

(3) MSL, Peak Temp. -- The Moisture Sensitivity Level rating according to the JEDEC industry standard classifications, and peak solder temperature.

(4) Multiple Top-Side Markings will be inside parentheses. Only one Top-Side Marking contained in parentheses and separated by a "~" will appear on a device. If a line is indented then it is a continuation of the previous line and the two combined represent the entire Top-Side Marking for that device.

Important Information and Disclaimer: The information provided on this page represents TI's knowledge and belief as of the date that it is provided. TI bases its knowledge and belief on information provided by third parties, and makes no representation or warranty as to the accuracy of such information. Efforts are underway to better integrate information from third parties. TI has taken and continues to take reasonable steps to provide representative and accurate information but may not have conducted destructive testing or chemical analysis on incoming materials and chemicals. TI and TI suppliers consider certain information to be proprietary, and thus CAS numbers and other limited information may not be available for release.

In no event shall TI's liability arising out of such information exceed the total purchase price of the TI part(s) at issue in this document sold by TI to Customer on an annual basis.

TAPE AND REEL INFORMATION

REEL DIMENSIONS

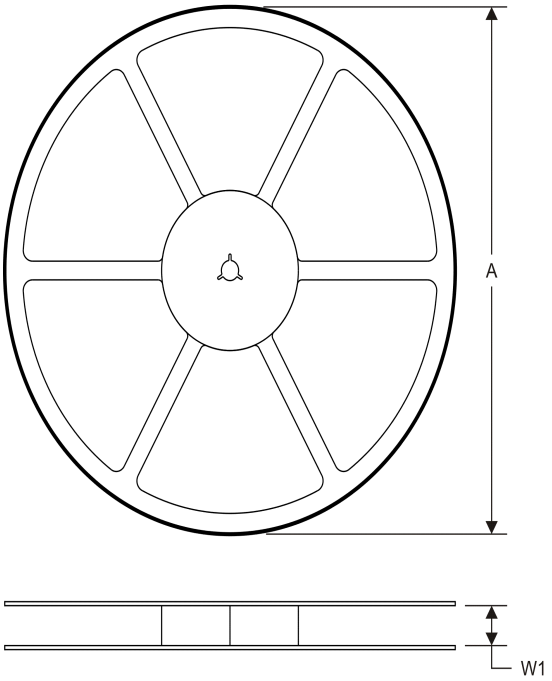

TAPE DIMENSIONS

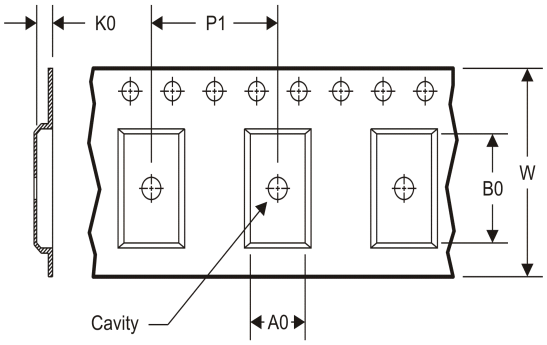

A0	Dimension designed to accommodate the component width
B0	Dimension designed to accommodate the component length
K0	Dimension designed to accommodate the component thickness
W	Overall width of the carrier tape
P1	Pitch between successive cavity centers

TAPE AND REEL INFORMATION

*All dimensions are nominal

Device	Package Type	Package Drawing	Pins	SPQ	Reel Diameter (mm)	Reel Width W1 (mm)	A0 (mm)	B0 (mm)	K0 (mm)	P1 (mm)	W (mm)	Pin1 Quadrant
BQ2205LYPWR	TSSOP	PW	16	2000	330.0	12.4	6.9	5.6	1.6	8.0	12.0	Q1

TAPE AND REEL BOX DIMENSIONS

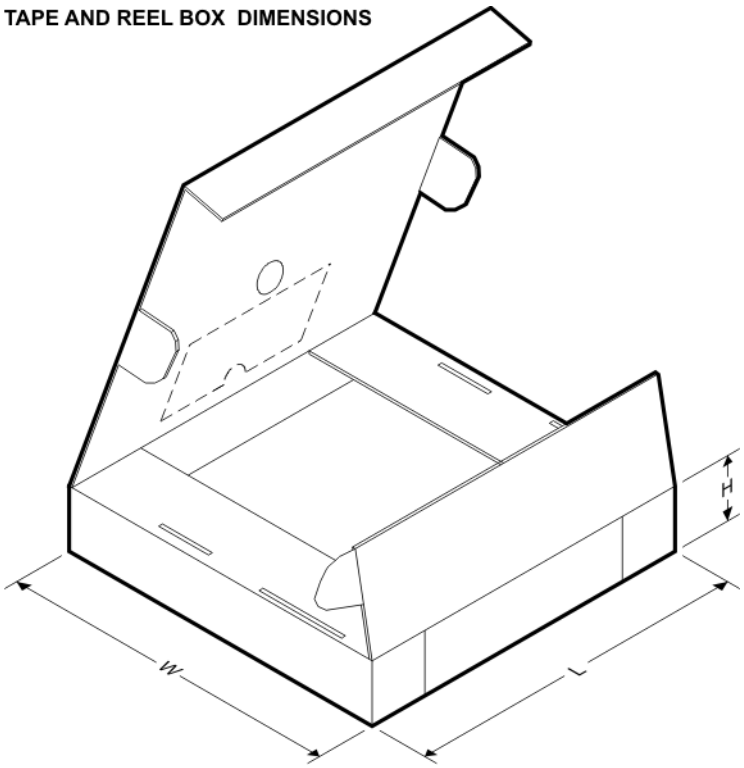

*All dimensions are nominal

Device	Package Type	Package Drawing	Pins	SPQ	Length (mm)	Width (mm)	Height (mm)
BQ2205LYPWR	TSSOP	PW	16	2000	367.0	367.0	35.0

PW (R–PDSO–G16) PLASTIC SMALL OUTLINE

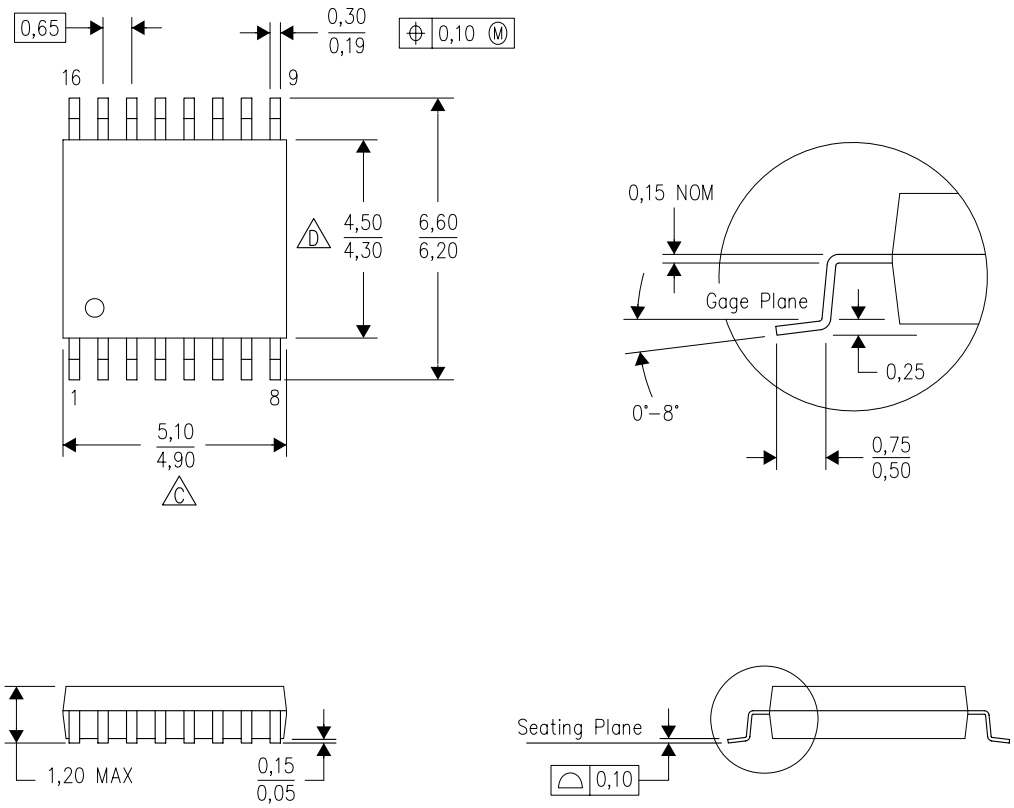

4040064–4/G 02/11

NOTES:
A. All linear dimensions are in millimeters. Dimensioning and tolerancing per ASME Y14.5M–1994.
B. This drawing is subject to change without notice.
C. Body length does not include mold flash, protrusions, or gate burrs. Mold flash, protrusions, or gate burrs shall not exceed 0,15 each side.
D. Body width does not include interlead flash. Interlead flash shall not exceed 0,25 each side.
E. Falls within JEDEC MO–153

PW (R–PDSO–G16) PLASTIC SMALL OUTLINE

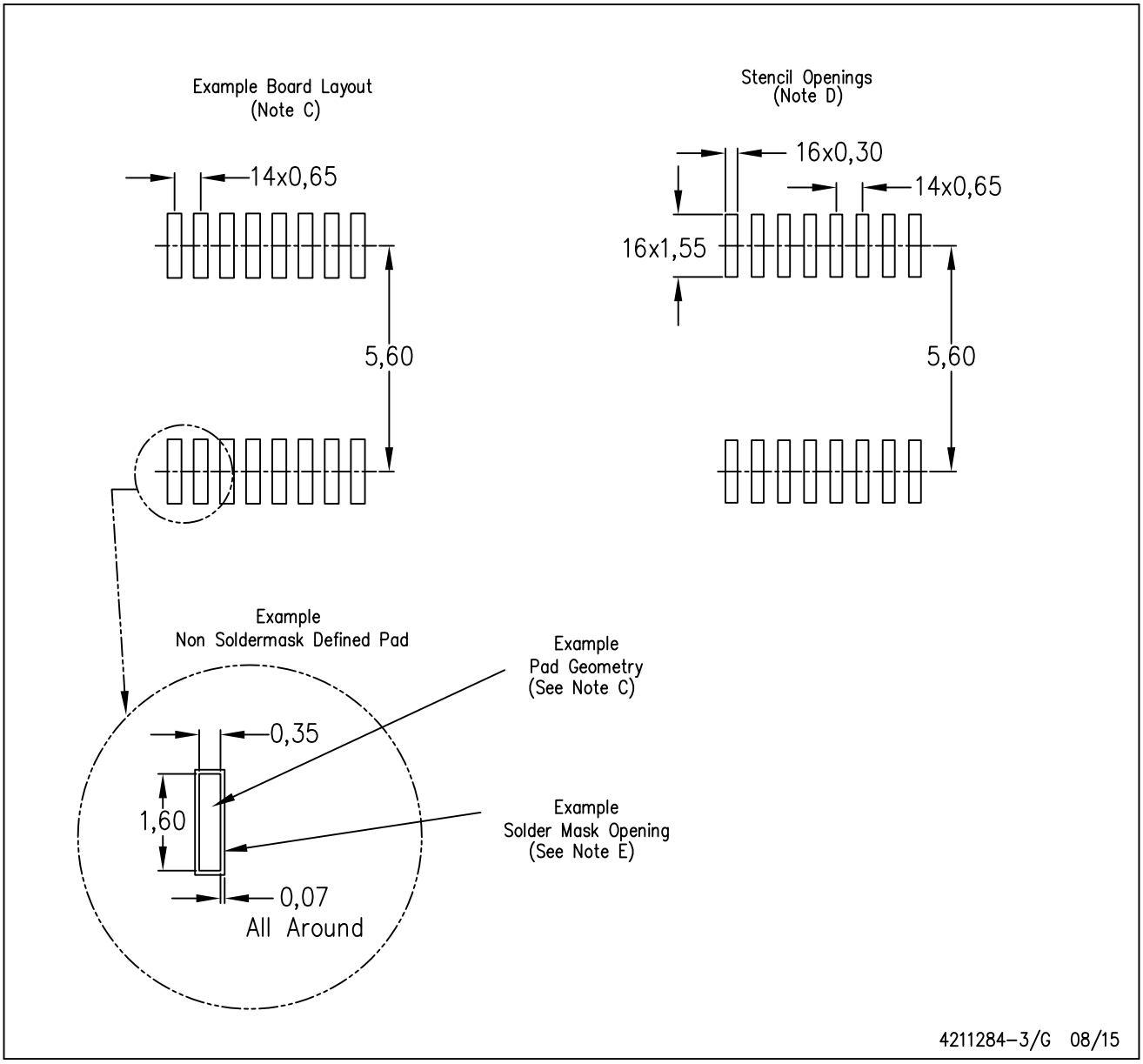

NOTES:
A. All linear dimensions are in millimeters.
B. This drawing is subject to change without notice.
C. Publication IPC–7351 is recommended for alternate designs.
D. Laser cutting apertures with trapezoidal walls and also rounding corners will offer better paste release. Customers should contact their board assembly site for stencil design recommendations. Refer to IPC–7525 for other stencil recommendations.
E. Customers should contact their board fabrication site for solder mask tolerances between and around signal pads.

IMPORTANT NOTICE

Texas Instruments Incorporated and its subsidiaries (TI) reserve the right to make corrections, enhancements, improvements and other changes to its semiconductor products and services per JESD46, latest issue, and to discontinue any product or service per JESD48, latest issue. Buyers should obtain the latest relevant information before placing orders and should verify that such information is current and complete. All semiconductor products (also referred to herein as “components”) are sold subject to TI’s terms and conditions of sale supplied at the time of order acknowledgment.

TI warrants performance of its components to the specifications applicable at the time of sale, in accordance with the warranty in TI’s terms and conditions of sale of semiconductor products. Testing and other quality control techniques are used to the extent TI deems necessary to support this warranty. Except where mandated by applicable law, testing of all parameters of each component is not necessarily performed.

TI assumes no liability for applications assistance or the design of Buyers’ products. Buyers are responsible for their products and applications using TI components. To minimize the risks associated with Buyers’ products and applications, Buyers should provide adequate design and operating safeguards.

TI does not warrant or represent that any license, either express or implied, is granted under any patent right, copyright, mask work right, or other intellectual property right relating to any combination, machine, or process in which TI components or services are used. Information published by TI regarding third-party products or services does not constitute a license to use such products or services or a warranty or endorsement thereof. Use of such information may require a license from a third party under the patents or other intellectual property of the third party, or a license from TI under the patents or other intellectual property of TI.

Reproduction of significant portions of TI information in TI data books or data sheets is permissible only if reproduction is without alteration and is accompanied by all associated warranties, conditions, limitations, and notices. TI is not responsible or liable for such altered documentation. Information of third parties may be subject to additional restrictions.

Resale of TI components or services with statements different from or beyond the parameters stated by TI for that component or service voids all express and any implied warranties for the associated TI component or service and is an unfair and deceptive business practice. TI is not responsible or liable for any such statements.

Buyer acknowledges and agrees that it is solely responsible for compliance with all legal, regulatory and safety-related requirements concerning its products, and any use of TI components in its applications, notwithstanding any applications-related information or support that may be provided by TI. Buyer represents and agrees that it has all the necessary expertise to create and implement safeguards which anticipate dangerous consequences of failures, monitor failures and their consequences, lessen the likelihood of failures that might cause harm and take appropriate remedial actions. Buyer will fully indemnify TI and its representatives against any damages arising out of the use of any TI components in safety-critical applications.

In some cases, TI components may be promoted specifically to facilitate safety-related applications. With such components, TI’s goal is to help enable customers to design and create their own end-product solutions that meet applicable functional safety standards and requirements. Nonetheless, such components are subject to these terms.

No TI components are authorized for use in FDA Class III (or similar life-critical medical equipment) unless authorized officers of the parties have executed a special agreement specifically governing such use.

Only those TI components which TI has specifically designated as military grade or “enhanced plastic” are designed and intended for use in military/aerospace applications or environments. Buyer acknowledges and agrees that any military or aerospace use of TI components which have ***not*** been so designated is solely at the Buyer's risk, and that Buyer is solely responsible for compliance with all legal and regulatory requirements in connection with such use.

TI has specifically designated certain components as meeting ISO/TS16949 requirements, mainly for automotive use. In any case of use of non-designated products, TI will not be responsible for any failure to meet ISO/TS16949.

Products		**Applications**	
Audio	www.ti.com/audio	Automotive and Transportation	www.ti.com/automotive
Amplifiers	amplifier.ti.com	Communications and Telecom	www.ti.com/communications
Data Converters	dataconverter.ti.com	Computers and Peripherals	www.ti.com/computers
DLP® Products	www.dlp.com	Consumer Electronics	www.ti.com/consumer-apps
DSP	dsp.ti.com	Energy and Lighting	www.ti.com/energy
Clocks and Timers	www.ti.com/clocks	Industrial	www.ti.com/industrial
Interface	interface.ti.com	Medical	www.ti.com/medical
Logic	logic.ti.com	Security	www.ti.com/security
Power Mgmt	power.ti.com	Space, Avionics and Defense	www.ti.com/space-avionics-defense
Microcontrollers	microcontroller.ti.com	Video and Imaging	www.ti.com/video
RFID	www.ti-rfid.com		
OMAP Applications Processors	www.ti.com/omap	**TI E2E Community**	e2e.ti.com
Wireless Connectivity	www.ti.com/wirelessconnectivity		

Mailing Address: Texas Instruments, Post Office Box 655303, Dallas, Texas 75265
Copyright © 2015, Texas Instruments Incorporated