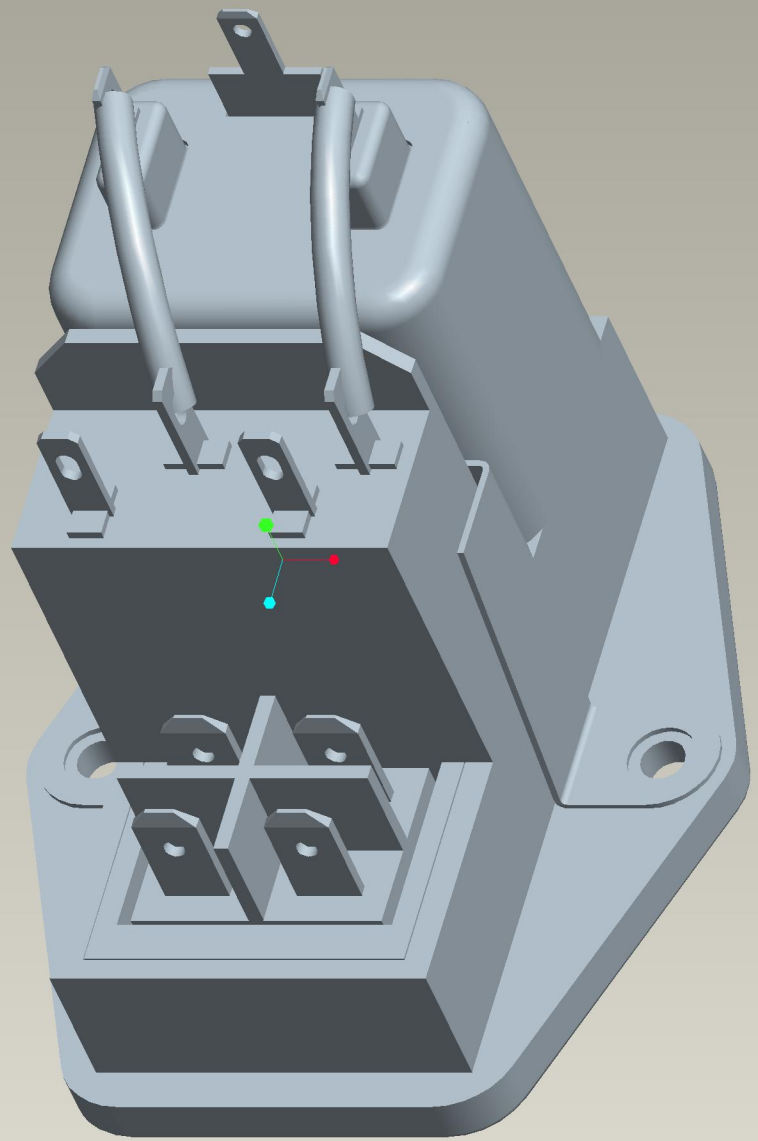

Instance:C-2-6609122-2