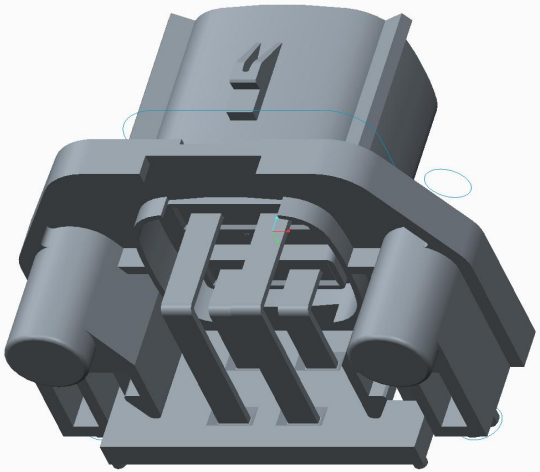

Instance:194370029

Instance:194370029

MATERIAL NO.: 194370029	CIRCUIT SIZE : 4	SHEET NO. 1 OF 1	SIZE A4	molex

THIS DRAWING CONTAINS INFORMATION THAT IS PROPRIETARY TO MOLEXINCORPORATED AND SHOULD NOT BE USED WITHOUT WRITTEN PERMISSION