DESCRIPTION: M12 FEMALE - PANEL MOUNT (REAR) - 3 POS.

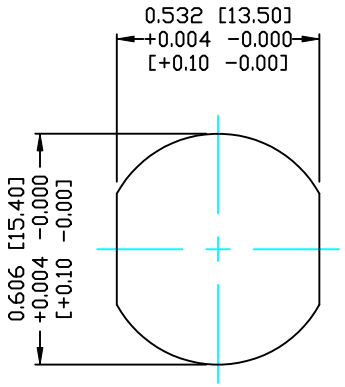

PANEL CUTOUT

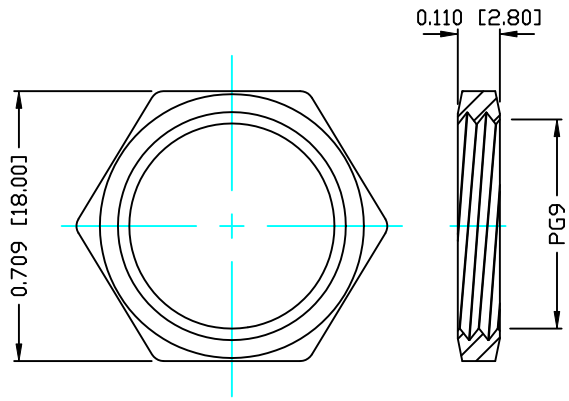

NUT

NOTE:

MATERIAL	
HOUSING:	PBT UL94V-0, BLACK
CONTACT:	BRASS
NUT:	BRASS
SHELL:	BRASS
O-RING:	EPDM, BLACK
FINISH	
CONTACT:	GOLD 10u" MIN. OVER 50u" NICKEL
NUT:	NICKEL PLATED
SHELL:	NICKEL PLATED
ELECTRICAL	
RATED CURRENT:	5A
RATED VOLTAGE:	125V
WATER PROOF:	IP67
ENVIRONMENT	
OPERATION TEMPERATURE:	-40°C TO +85°C

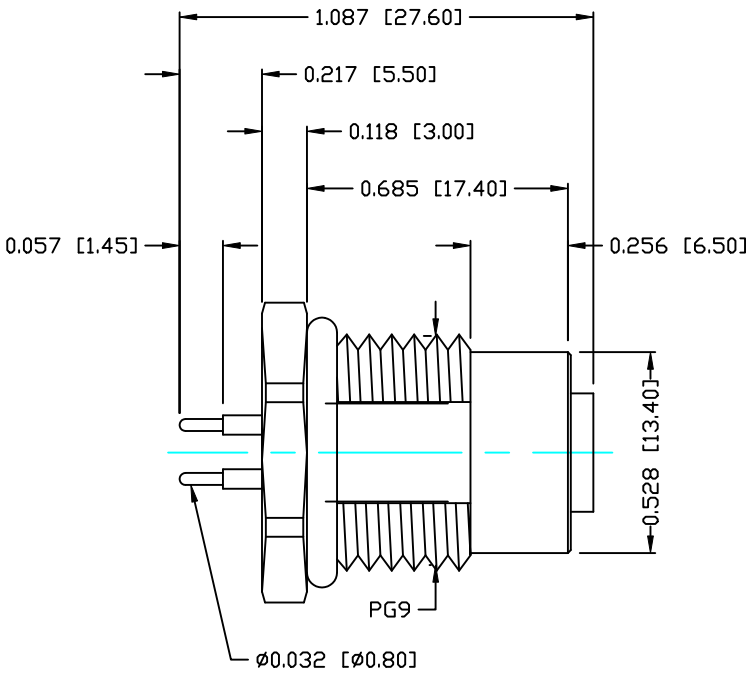

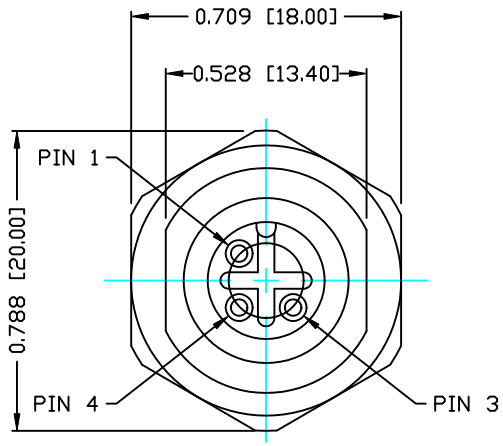

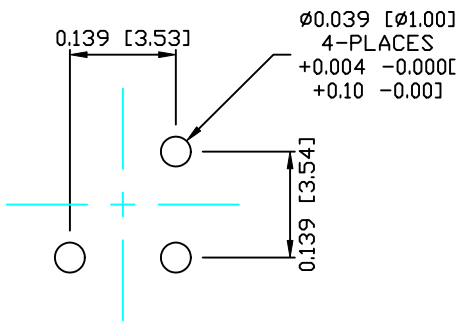

PLC LAYOUT

RoHS COMPLIANT

DO NOT SCALE FROM DRAWING

THESE DRAWINGS AND SPECIFICATIONS ARE THE PROPERTY OF NorComp AND SHALL NOT BE REPRODUCED, COPIED OR USED AS THE BASIS FOR THE MANUFACTURE OR SALE OF APPARATUS WITHOUT WRITTEN PERMISSION.

DRAWN: C. SMITH	DATE: 08-29-14	NorComp	SCALE: N.T.S.	SHEET 1 OF 1	REV 0
CHECKED:	DATE:		DWG NO. 860-003-213R004		