Capacitor Data Sheet

DEC1X3J150JC4B

" # " indicates a package specification code.

In Production | General | 85 ℃ | Flow OK | RoHS | REACH

< List of part numbers with package codes >
DEC1X3J150JC4B

Shape

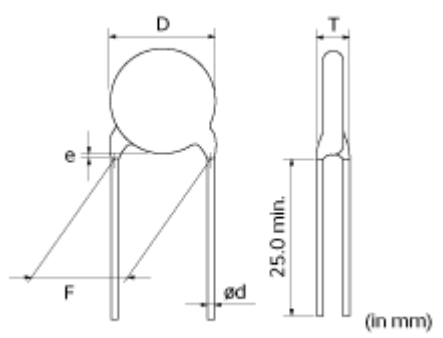

L size or outer diameter D (mm)	8.0 mm max.
T size	7.0 mm max.
Lead spacing F	10.0 ±1.0mm
Lead diameter d	0.6 ±0.05mm
Paint dripping e	3.0mm max.

Specifications

Capacitance	15pF ±5%
Rated voltage	6300Vdc
Temperature characteristics (complied standard)	SL(JIS)
Temperature coefficient	+350 to -1000ppm/℃
Temperature range of temperature characteristics	20 to 85℃
Operating temperature range	-25 to 85℃

References

Packaging	Specifications	Minimum quantity
B	Packing in bulk	250

Attention

1.This datasheet is downloaded from the website of Murata Manufacturing Co., Ltd. Therefore, it ' s specifications are subject to change or our products in it may be discontinued without advance notice. Please check with our sales representatives or product engineers before ordering.
2.This datasheet has only typical specifications because there is no space for detailed specifications.
Therefore, please review our product specifications or consult the approval sheet for product specifications before ordering.

Murata Manufacturing Co., Ltd. URL : http://www.murata.com/

Last updated: 2015/12/04