February 2016

FDH300 / FDH300A / FDLL300A / FDH333 / FDLL333
High Conductance Low Leakage Diode

DO-35
Cathode is denoted with a black band

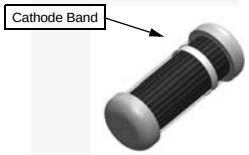

LL-34 (SOD-80)
THE PLACEMENT OF THE EXPANSION GAP HAS NO RELATIONSHIP TO THE LOCATION OF THE CATHODE TERMINAL

LL-34 COLOR BAND MARKING

DEVICE	1ST BAND
FDLL300A	WHITE
FDLL333	WHITE

-1st band denotes cathode terminal and has wider width

Ordering Information

Part Number	Top Mark	Package	Packing Method
FDH300TR	H300	DO-204AH (DO-35)	Tape and Reel
FDH300A	H300A	DO-204AH (DO-35)	Bulk
FDH300ATR	H300A	DO-204AH (DO-35)	Tape and Reel
FDH333	H333	DO-204AH (DO-35)	Bulk
FDH333TR	H333	DO-204AH (DO-35)	Tape and Reel
FDLL300A	WHITE	SOD-80 2L	Tape and Reel
FDLL333	WHITE	SOD-80 2L	Tape and Reel

Absolute Maximum Ratings(1), (2)

Stresses exceeding the absolute maximum ratings may damage the device. The device may not function or be operable above the recommended operating conditions and stressing the parts to these levels is not recommended. In addition, extended exposure to stresses above the recommended operating conditions may affect device reliability. The absolute maximum ratings are stress ratings only. Values are at T_A = 25°C unless otherwise noted.

Symbol	Parameter		Value	Unit
W_{IV}	Working Inverse Voltage		125	V
I_O	Average Rectified Forward Current		200	mA
I_F	DC Forward Current		500	mA
i_f	Recurrent Peak Forward Current		600	mA
I_{FSM}	Non-Repetitive Peak Forward Surge Current	Pulse Width = 1.0 s	1.0	A
		Pulse Width = 1.0 µs	4.0	
T_{STG}	Storage Temperature Range		-65 to +200	°C
T_J	Operating Junction Temperature		175	°C

Notes:

1. These ratings are based on a maximum junction temperature of 175°C.
2. These are steady-state limits. Fairchild Semiconductor should be consulted on applications involving pulsed or low-duty-cycle operations.

© 1997 Fairchild Semiconductor Corporation

Thermal Characteristics

Values are at T_A = 25°C unless otherwise noted.

Symbol	Parameter	Max.	Unit
P_D	Total Device Dissipation	500	mW
	Derate Above 25°C	3.33	mW/°C
$R_{\theta JA}$	Thermal Resistance, Junction-to-Ambient	300	°C/W

Electrical Characteristics

Values are at T_A = 25°C unless otherwise noted.

Symbol	Parameter		Conditions	Min.	Max.	Unit
V_R	Breakdown Voltage		I_R = 100 μA	150		V
V_F	Forward Voltage	FDH300 / FDH300A / FDLL300A	I_F = 1.0 mA		680	mV
		FDH300	I_F = 5.0 mA		750	mV
		FDH300A / FDLL300A	I_F = 5.0 mA		760	mV
		FDH300 / FDH300A / FDLL300A	I_F = 10 mA		800	mV
		FDH300	I_F = 50 mA		880	mV
		FDH300A / FDLL300A	I_F = 50 mA		890	mV
		FDH300 / FDH300A / FDLL300A	I_F = 100 mA		920	mV
		FDH300 / FDH300A / FDLL300A	I_F = 200 mA		1.0	V
		FDH333 / FDLL333	I_F = 50 mA	800	890	mV
			I_F = 100 mA	830	940	mV
			I_F = 150 mA	860	970	mV
			I_F = 200 mA	0.87	1.05	V
			I_F = 250 mA	0.88	1.08	V
			I_F = 300 mA	0.90	1.15	V
I_R	Reverse Current	FDH300 / FDH300A / FDLL300A	V_R = 125 V		1.0	nA
			V_R = 125 V, T_A = 150°C		3.0	μA
		FDH333 / FDLL333	V_R = 125 V		3.0	nA
			V_R = 125 V, T_A = 100°C		500	nA
C_O	Diode Capacitance		V_R = 0, f = 1.0 MHz		6.0	pF

© 1997 Fairchild Semiconductor Corporation

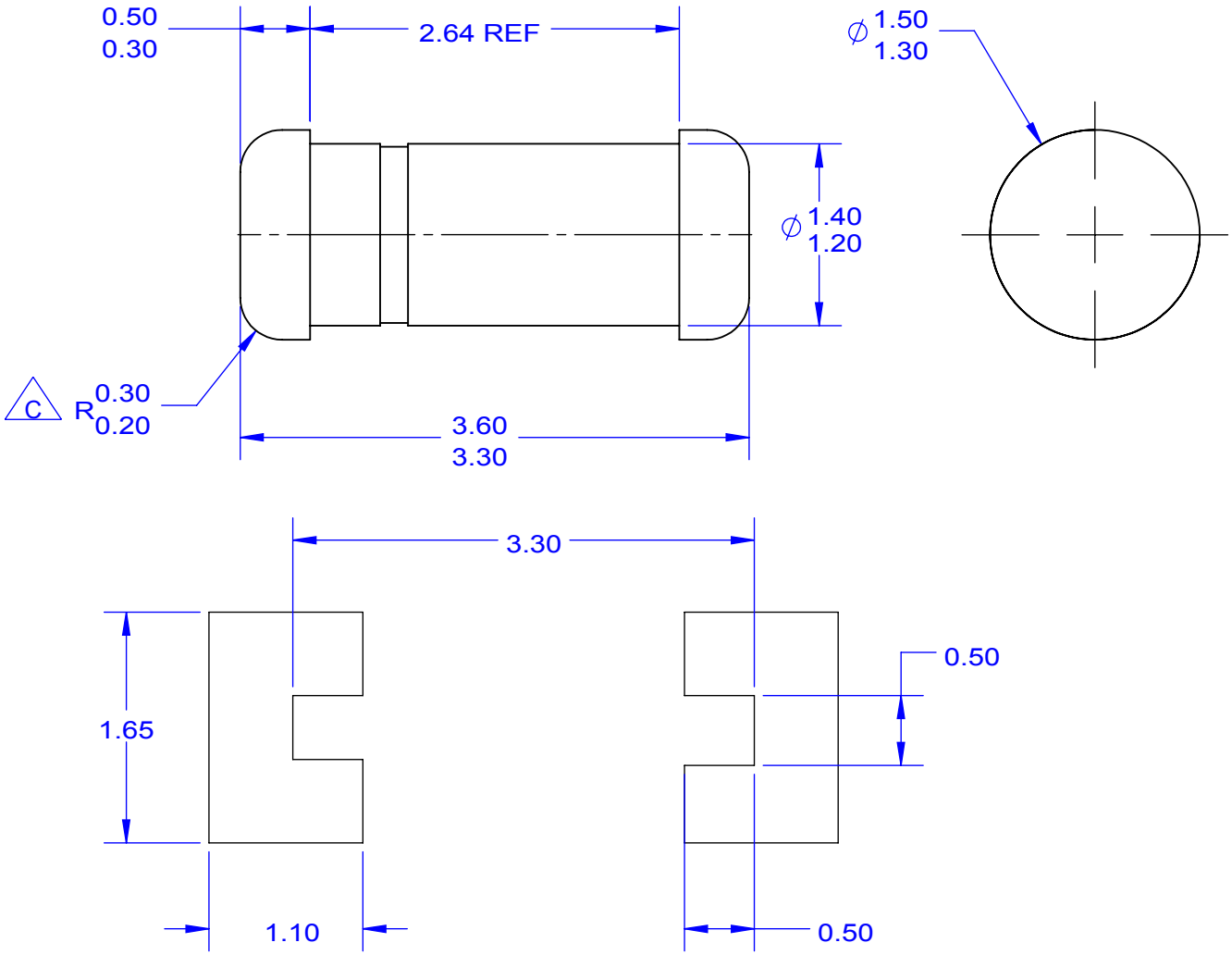

LAND PATTERN RECOMMENDATION

NOTES: UNLESS OTHERWISE SPECIFIED

A) PACKAGE STANDARD REFERENCE:
JEDEC DO-213, VARIATION AC.

B) ALL DIMENSIONS ARE IN MILLIMETERS.

C CORNER RADIUS IS OPTIONAL.

D) LAND PATTERN RECOMMENDATION PER IPC DIOMELF3414N

E) DRAWING FILE NAME: SOD80A REV3

FAIRCHILD ™

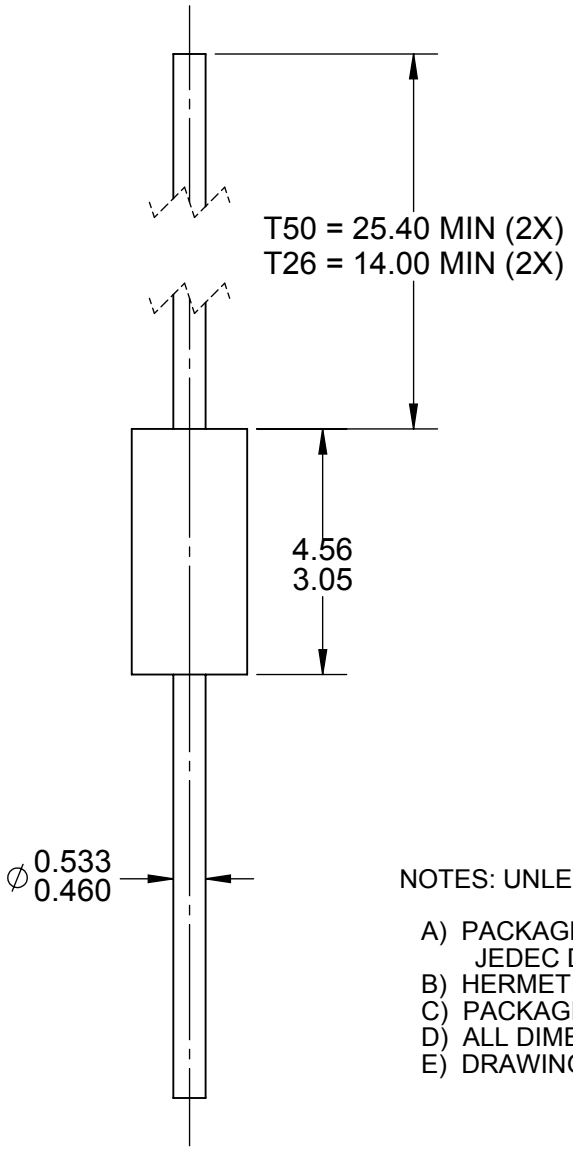

NOTES: UNLESS OTHERWISE SPECIFIED

A) PACKAGE STANDARD REFERENCE:
JEDEC DO-204, VARIATION AH.
B) HERMETICALLY SEALED GLASS PACKAGE.
C) PACKAGE WEIGHT IS 0.137 GRAM.
D) ALL DIMENSIONS ARE IN MILLIMETERS.
E) DRAWING FILE NAME: DO35AREV03

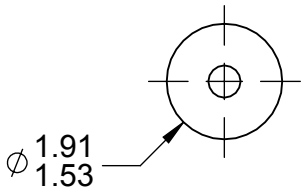

FAIRCHILD ™

TRADEMARKS

The following includes registered and unregistered trademarks and service marks, owned by Fairchild Semiconductor and/or its global subsidiaries, and is not intended to be an exhaustive list of all such trademarks.

AccuPower™
AttitudeEngine™
Awinda®
AX-CAP®*
BitSiC™
Build it Now™
CorePLUS™
CorePOWER™
CROSSVOLT™
CTL™
Current Transfer Logic™
DEUXPEED®
Dual Cool™
EcoSPARK®
EfficientMax™
ESBC™
®
Fairchild®
Fairchild Semiconductor®
FACT Quiet Series™
FACT®
FastvCore™
FETBench™
FPS™
F-PFS™
FRFET®
Global Power Resource℠
GreenBridge™
Green FPS™
Green FPS™ e-Series™
G*max*™
GTO™
IntelliMAX™
ISOPLANAR™
Making Small Speakers Sound Louder and Better™
MegaBuck™
MICROCOUPLER™
MicroFET™
MicroPak™
MicroPak2™
MillerDrive™
MotionMax™
MotionGrid®
MTi®
MTx®
MVN®
mWSaver®
OptoHiT™
OPTOLOGIC®
OPTOPLANAR®
®
Power Supply WebDesigner™
PowerTrench®
PowerXS™
Programmable Active Droop™
QFET®
QS™
Quiet Series™
RapidConfigure™
™
Saving our world, 1mW/W/kW at a time™
SignalWise™
SmartMax™
SMART START™
Solutions for Your Success™
SPM®
STEALTH™
SuperFET®
SuperSOT™-3
SuperSOT™-6
SuperSOT™-8
SupreMOS®
SyncFET™
Sync-Lock™
SYSTEM GENERAL®*
TinyBoost®
TinyBuck®
TinyCalc™
TinyLogic®
TINYOPTO™
TinyPower™
TinyPWM™
TinyWire™
TranSiC™
TriFault Detect™
TRUECURRENT®*
µSerDes™
µSerDes™
UHC®
Ultra FRFET™
UniFET™
VCX™
VisualMax™
VoltagePlus™
XS™
Xsens™
仙童®

* Trademarks of System General Corporation, used under license by Fairchild Semiconductor.

DISCLAIMER

FAIRCHILD SEMICONDUCTOR RESERVES THE RIGHT TO MAKE CHANGES WITHOUT FURTHER NOTICE TO ANY PRODUCTS HEREIN TO IMPROVE RELIABILITY, FUNCTION, OR DESIGN. TO OBTAIN THE LATEST, MOST UP-TO-DATE DATASHEET AND PRODUCT INFORMATION, VISIT OUR WEBSITE AT HTTP://WWW.FAIRCHILDSEMI.COM. FAIRCHILD DOES NOT ASSUME ANY LIABILITY ARISING OUT OF THE APPLICATION OR USE OF ANY PRODUCT OR CIRCUIT DESCRIBED HEREIN; NEITHER DOES IT CONVEY ANY LICENSE UNDER ITS PATENT RIGHTS, NOR THE RIGHTS OF OTHERS. THESE SPECIFICATIONS DO NOT EXPAND THE TERMS OF FAIRCHILD'S WORLDWIDE TERMS AND CONDITIONS, SPECIFICALLY THE WARRANTY THEREIN, WHICH COVERS THESE PRODUCTS.

AUTHORIZED USE

Unless otherwise specified in this data sheet, this product is a standard commercial product and is not intended for use in applications that require extraordinary levels of quality and reliability. This product may not be used in the following applications, unless specifically approved in writing by a Fairchild officer: (1) automotive or other transportation, (2) military/aerospace, (3) any safety critical application – including life critical medical equipment – where the failure of the Fairchild product reasonably would be expected to result in personal injury, death or property damage. Customer's use of this product is subject to agreement of this Authorized Use policy. In the event of an unauthorized use of Fairchild's product, Fairchild accepts no liability in the event of product failure. In other respects, this product shall be subject to Fairchild's Worldwide Terms and Conditions of Sale, unless a separate agreement has been signed by both Parties.

ANTI-COUNTERFEITING POLICY

Fairchild Semiconductor Corporation's Anti-Counterfeiting Policy. Fairchild's Anti-Counterfeiting Policy is also stated on our external website, www.fairchildsemi.com, under Terms of Use

Counterfeiting of semiconductor parts is a growing problem in the industry. All manufacturers of semiconductor products are experiencing counterfeiting of their parts. Customers who inadvertently purchase counterfeit parts experience many problems such as loss of brand reputation, substandard performance, failed applications, and increased cost of production and manufacturing delays. Fairchild is taking strong measures to protect ourselves and our customers from the proliferation of counterfeit parts. Fairchild strongly encourages customers to purchase Fairchild parts either directly from Fairchild or from Authorized Fairchild Distributors who are listed by country on our web page cited above. Products customers buy either from Fairchild directly or from Authorized Fairchild Distributors are genuine parts, have full traceability, meet Fairchild's quality standards for handling and storage and provide access to Fairchild's full range of up-to-date technical and product information. Fairchild and our Authorized Distributors will stand behind all warranties and will appropriately address any warranty issues that may arise. Fairchild will not provide any warranty coverage or other assistance for parts bought from Unauthorized Sources. Fairchild is committed to combat this global problem and encourage our customers to do their part in stopping this practice by buying direct or from authorized distributors.

PRODUCT STATUS DEFINITIONS

Definition of Terms

Datasheet Identification	Product Status	Definition
Advance Information	Formative / In Design	Datasheet contains the design specifications for product development. Specifications may change in any manner without notice.
Preliminary	First Production	Datasheet contains preliminary data; supplementary data will be published at a later date. Fairchild Semiconductor reserves the right to make changes at any time without notice to improve design.
No Identification Needed	Full Production	Datasheet contains final specifications. Fairchild Semiconductor reserves the right to make changes at any time without notice to improve the design.
Obsolete	Not In Production	Datasheet contains specifications on a product that is discontinued by Fairchild Semiconductor. The datasheet is for reference information only.

Rev. I77