19-1800; Rev 1; 5/06

±15kV ESD-Protected, Fail-Safe, High-Speed (10Mbps), Slew-Rate-Limited RS-485/RS-422 Transceivers

General Description

The MAX3080E–MAX3089E are ±15kV electrostatic discharge (ESD)-protected, high-speed transceivers for RS-485/RS-422 communication that contain one driver and one receiver. These devices feature fail-safe circuitry, which guarantees a logic-high receiver output when the receiver inputs are open or shorted. This means that the receiver output will be a logic high if all transmitters on a terminated bus are disabled (high impedance). The MAX3080E/MAX3081E/MAX3082E feature reduced slew-rate drivers that minimize EMI and reduce reflections caused by improperly terminated cables, allowing error-free data transmission up to 115kbps. The MAX3083E/MAX3084E/MAX3085E offer higher driver output slew-rate limits, allowing transmit speeds up to 500kbps. The MAX3086E/MAX3087E/ MAX3088Es' driver slew rates are not limited, making transmit speeds up to 10Mbps possible. The MAX3089E's slew rate is selectable between 115kbps, 500kbps, and 10Mbps by driving a selector pin with a single three-state driver. All devices feature enhanced ESD protection. All transmitter outputs and receiver inputs are protected to ±15kV using the Human Body Model.

These transceivers typically draw 375µA of supply current when unloaded, or when fully loaded with the drivers disabled.

All devices have a 1/8-unit-load receiver input impedance that allows up to 256 transceivers on the bus. The MAX3082E/MAX3085E/MAX3088E are intended for half-duplex communications, while the MAX3080E/MAX3081E/MAX3083E/MAX3084E/MAX3086E/MAX3087E are intended for full-duplex communications. The MAX3089E is selectable between half-duplex and full-duplex operation. It also features independently programmable receiver and transmitter output phase via separate pins.

Features

- **ESD Protection for RS-485 I/O Pins ±15kV, Human Body Model**
- **True Fail-Safe Receiver While Maintaining EIA/TIA-485 Compatibility**
- **Enhanced Slew-Rate Limiting Facilitates Error-Free Data Transmission (MAX3080E–MAX3085E/MAX3089E)**
- **1nA Low-Current Shutdown Mode (Except MAX3081E/MAX3084E/MAX3087E)**
- **Pin-Selectable Full/Half-Duplex Operation (MAX3089E)**
- **Phase Controls to Correct for Twisted-Pair Reversal (MAX3089E)**
- **Allow Up to 256 Transceivers on the Bus**

Applications

RS-422/RS-485 Communications
Level Translators
Transceivers for EMI-Sensitive Applications
Industrial-Control Local Area Networks

Ordering Information

PART	TEMP. RANGE	PIN-PACKAGE
MAX3080ECSD	0°C to +70°C	14 SO
MAX3080ECPD	0°C to +70°C	14 Plastic DIP
MAX3080EESD	-40°C to +85°C	14 SO
MAX3080EEPD	-40°C to +85°C	14 Plastic DIP

Ordering Information continued at end of data sheet.

Selector Guide

Part	Half/Full Duplex	Data Rate (Mbps)	Slew-Rate Limited	Low-Power Shutdown	Receiver/ Driver Enable	Quiescent Current (µA)	Transceivers On Bus	Pin Count	Industry-Standard Pinout
MAX3080E	Full	0.115	Yes	Yes	Yes	375	256	14	75180
MAX3081E	Full	0.115	Yes	No	No	375	256	8	75179
MAX3082E	Half	0.115	Yes	Yes	Yes	375	256	8	75176
MAX3083E	Full	0.5	Yes	Yes	Yes	375	256	14	75180
MAX3084E	Full	0.5	Yes	No	No	375	256	8	75179
MAX3085E	Half	0.5	Yes	Yes	Yes	375	256	8	75176
MAX3086E	Full	10	No	Yes	Yes	375	256	14	75180
MAX3087E	Full	10	No	No	No	375	256	8	75179
MAX3088E	Half	10	No	Yes	Yes	375	256	8	75176
MAX3089E	Selectable	Selectable	Selectable	Yes	Yes	375	256	14	75180*

**Pin compatible with 75180, with additional features implemented using pins 1, 6, 8, and 13.*

For free samples and the latest literature, visit www.maxim-ic.com or phone 1-800-998-8800. For small orders, phone 1-800-835-8769.

±15kV ESD-Protected, Fail-Safe, High-Speed (10Mbps), Slew-Rate-Limited RS-485/RS-422 Transceivers

ABSOLUTE MAXIMUM RATINGS

Supply Voltage (V_{CC}) .....+7V
Control Input Voltage ($\overline{RE}$, DE).....-0.3V to (V_{CC} + 0.3V)
Special Input Voltage
(H/$\overline{F}$, SRL, TXP, RXP).....-0.3V to (V_{CC} + 0.3V)
Driver Input Voltage (DI).....-0.3V to (V_{CC} + 0.3V)
Driver Output Voltage (A, B, Y, Z).....±13V
Receiver Input Voltage (A, B) .....±13V
Receiver Input Voltage, Full Duplex (A, B) .....±25V
Receiver Output Voltage (RO).....-0.3V to (V_{CC} + 0.3V)

Continuous Power Dissipation
8-Pin Plastic DIP (derate 9.09mW/°C above +70°C) ...727mW
8-Pin SO (derate 5.88mW/°C above +70°C).....471mW
14-Pin Plastic DIP (derate 10.0mW/°C above +70°C) 800mW
14-Pin SO (derate 8.33mW/°C above +70°C).....667mW
Operating Temperature Ranges
MAX308_EC_ _ .....0°C to +70°C
MAX308_EE_ _ .....-40°C to +85°C
Storage Temperature Range .....-65°C to +150°C
Lead Temperature (soldering, 10s) .....+300°C

Stresses beyond those listed under "Absolute Maximum Ratings" may cause permanent damage to the device. These are stress ratings only, and functional operation of the device at these or any other conditions beyond those indicated in the operational sections of the specifications is not implied. Exposure to absolute maximum rating conditions for extended periods may affect device reliability.

DC ELECTRICAL CHARACTERISTICS

(V_{CC} = +5V ±5%, T_A = T_{MIN} to T_{MAX}, unless otherwise noted. Typical values are at V_{CC} = +5V and T_A = +25°C.) (Note 1)

PARAMETER	SYMBOL	CONDITIONS		MIN	TYP	MAX	UNITS
DRIVER							
Differential Driver Output (No Load)	V_{OD1}	Figure 5				5	V
Differential Driver Output	V_{OD2}	Figure 5, R = 50Ω (RS-422)		2.0			V
		Figure 5, R = 27Ω (RS-485)		1.5			
Change-in-Magnitude of Differential Output Voltage (Note 2)	ΔV_{OD}	Figure 5, R = 50Ω or R = 27Ω				0.2	V
Driver Common-Mode Output Voltage	V_{OC}	Figure 5, R = 50Ω or R = 27Ω				3	V
Change-in-Magnitude of Common-Mode Voltage (Note 2)	ΔV_{OC}	Figure 5, R = 50Ω or R = 27Ω				0.2	V
Input High Voltage	V_{IH1}	DE, DI, $\overline{RE}$, H/$\overline{F}$, TXP, RXP		2.0			V
Input Low Voltage	V_{IL1}	DE, DI, $\overline{RE}$, H/$\overline{F}$, TXP, RXP				0.8	V
DI Input Hysteresis	V_{HYS}	MAX3080E–MAX3085E, and MAX3089E with SRL = V_{CC} or unconnected			100		mV
SRL Input Current	I_{IN1}	DE, DI, $\overline{RE}$				±2	µA
	I_{IN2}	H/$\overline{F}$, TXP, RXP, internal pulldown		10		40	
Input High Voltage	V_{IH2}	SRL		V_{CC} - 0.8			V
Input Middle Voltage	V_{IM2}	SRL (Note 3)		0.4V_{CC}		0.6V_{CC}	V
Input Low Voltage	V_{IL2}	SRL				0.8	V
SRL Input Current	I_{IN3}	SRL = V_{CC}				75	µA
		SRL = GND (Note 3)		-75			
Input Current (A and B)	I_{IN4}	DE = GND, V_{CC} = GND or 5.25V	V_{IN} = 12V			125	µA
			V_{IN} = -7V			-75	
Output Leakage (Y and Z) Full Duplex	I_O	DE = GND, V_{CC} = GND or 5.25V	V_{IN} = 12V			125	µA
			V_{IN} = -7V	-100			
Driver Short-Circuit Output Current (Note 4)	V_{OD1}	-7V ≤ V_{OUT} ≤ V_{CC}		-250			mA
		0V ≤ V_{OUT} ≤ 12V				250	
		0V ≤ V_{OUT} ≤ V_{CC}		±25			

DC ELECTRICAL CHARACTERISTICS (continued)

(V_{CC} = +5V ±5%, T_A = T_{MIN} to T_{MAX}, unless otherwise noted. Typical values are at V_{CC} = +5V and T_A = +25°C.) (Note 1)

PARAMETER	SYMBOL	CONDITIONS		MIN	TYP	MAX	UNITS
RECEIVER							
Receiver Differential Threshold Voltage	V_{TH}	-7V ≤ V_{CM} ≤ 12V		-200	-125	-50	mV
Receiver Input Hysteresis	ΔV_{TH}				25		mV
Receiver Output High Voltage	V_{OH}	I_O = -4mA, V_{ID} = -50mV		V_{CC} -1.5			V
Receiver Output Low Voltage	V_{OL}	I_O = 4mA, V_{ID} = -200mV				0.4	V
Three-State Output Current at Receiver	I_{OZR}	0.4V ≤ V_O ≤ 2.4V				±1	µA
Receiver Input Resistance	R_{IN}	-7V ≤ V_{CM} ≤ 12V		96			kΩ
Receiver Output Short-Circuit Current	I_{OSR}	0V ≤ V_{RO} ≤ V_{CC}		±7		±95	mA
SUPPLY CURRENT							
Supply Current	I_{CC}	No load, $\overline{RE}$ = DI = GND or V_{CC}, SRL = V_{CC}	DE = V_{CC}		430	900	µA
			DE = GND		375	600	
		No load, $\overline{RE}$ = DI = GND or V_{CC}, SRL = GND	DE = V_{CC}		475	1000	µA
			DE = GND		420	800	
Supply Current in Shutdown Mode	I_{SHDN}	DE = GND, $V_{\overline{RE}}$ = V_{CC}			0.001	10	µA
ESD Protection for Y, Z, A, B		Human Body Model			±15		kV

Note 1: All currents into the device are positive; all currents out of the device are negative. All voltages are referred to device ground unless otherwise noted.

Note 2: ΔV_{OD} and ΔV_{OC} are the changes in V_{OD} and V_{OC}, respectively, when the DI input changes state.

Note 3: The SRL pin is internally biased to V_{CC} / 2 by a 100kΩ/100kΩ resistor-divider. It is guaranteed to be V_{CC} / 2 if left unconnected.

Note 4: Maximum current level applies to peak current just prior to foldback-current limiting; minimum current level applies during current limiting.

SWITCHING CHARACTERISTICS—MAX3080E/MAX3081E/MAX3082E, and MAX3089E with SRL = Unconnected

(V_{CC} = +5V ±5%, T_A = T_{MIN} to T_{MAX}, unless otherwise noted. Typical values are at V_{CC} = +5V and T_A = +25°C.)

PARAMETER	SYMBOL	CONDITIONS	MIN	TYP	MAX	UNITS
Driver Input-to-Output	t_{DPLH}	Figures 7 and 9, R_{DIFF} = 54Ω, C_{L1} = C_{L2} = 100pF	500	2030	2600	ns
	t_{DPHL}		500	2030	2600	
Driver Output Skew | t_{DPLH} - t_{DPHL} |	t_{DSKEW}	Figures 7 and 9, R_{DIFF} = 54Ω, C_{L1} = C_{L2} = 100pF		-3	±200	ns
Driver Rise or Fall Time	t_{DR}, t_{DF}	Figures 7 and 9, R_{DIFF} = 54Ω, C_{L1} = C_{L2} = 100pF	667	1320	2500	ns
Maximum Data Rate	f_{MAX}		115			kbps
Driver Enable to Output High	t_{DZH}	Figures 8 and 10, C_L = 100pF, S2 closed			3500	ns
Driver Enable to Output Low	t_{DZL}	Figures 8 and 10, C_L = 100pF, S1 closed			3500	ns
Driver Disable Time from Low	t_{DLZ}	Figures 8 and 10, C_L = 15pF, S1 closed			100	ns
Driver Disable Time from High	t_{DHZ}	Figures 8 and 10, C_L = 15pF, S2 closed			100	ns
Receiver Input to Output	t_{RPLH}, t_{RPHL}	Figures 11 and 13; | V_{ID} | ≥ 2.0V; rise and fall time of V_{ID} ≤ 15ns		127	200	ns
| t_{RPLH} - t_{RPHL} | Differential Receiver Skew	t_{RSKD}	Figures 11 and 13; | V_{ID} | ≥ 2.0V; rise and fall time of V_{ID} ≤ 15ns		3	±30	ns
Receiver Enable to Output Low	t_{RZL}	Figures 6 and 12, C_L = 100pF, S1 closed		20	50	ns
Receiver Enable to Output High	t_{RZH}	Figures 6 and 12, C_L = 100pF, S2 closed		20	50	ns
Receiver Disable Time from Low	t_{RLZ}	Figures 6 and 12, C_L = 100pF, S1 closed		20	50	ns
Receiver Disable Time from High	t_{RHZ}	Figures 6 and 12, C_L = 100pF, S2 closed		20	50	ns
Time to Shutdown	t_{SHDN}	(Note 5)	50	200	600	ns
Driver Enable from Shutdown to Output High	$t_{DZH(SHDN)}$	Figures 8 and 10, C_L = 15pF, S2 closed			6000	ns
Driver Enable from Shutdown to Output Low	$t_{DZL(SHDN)}$	Figures 8 and 10, C_L = 15pF, S1 closed			6000	ns
Receiver Enable from Shutdown-to-Output High	$t_{RZH(SHDN)}$	Figures 6 and 12, C_L = 100pF, S2 closed			3500	ns
Receiver Enable from Shutdown-to-Output Low	$t_{RZL(SHDN)}$	Figures 6 and 12, C_L = 100pF, S1 closed			3500	ns

SWITCHING CHARACTERISTICS—MAX3083E/MAX3084E/MAX3085E, and MAX3089E with SRL = V_{CC}

(V_{CC} = +5V ±5%, T_A = T_{MIN} to T_{MAX}, unless otherwise noted. Typical values are at V_{CC} = +5V and T_A = +25°C.)

PARAMETER	SYMBOL	CONDITIONS	MIN	TYP	MAX	UNITS
Driver Input-to-Output	t_{DPLH}	Figures 7 and 9, R_{DIFF} = 54Ω, C_{L1} = C_{L2} = 100pF	250	720	1000	ns
	t_{DPHL}		250	720	1000	
Driver Output Skew | t_{DPLH} - t_{DPHL} |	t_{DSKEW}	Figures 7 and 9, R_{DIFF} = 54Ω, C_{L1} = C_{L2} = 100pF		-3	±100	ns
Driver Rise or Fall Time	t_{DR}, t_{DF}	Figures 7 and 9, R_{DIFF} = 54Ω, C_{L1} = C_{L2} = 100pF	200	530	750	ns
Maximum Data Rate	f_{MAX}		500			kbps
Driver Enable to Output High	t_{DZH}	Figures 8 and 10, C_L = 100pF, S2 closed			2500	ns
Driver Enable to Output Low	t_{DZL}	Figures 8 and 10, C_L = 100pF, S1 closed			2500	ns
Driver Disable Time from Low	t_{DLZ}	Figures 8 and 10, C_L = 15pF, S1 closed			100	ns
Driver Disable Time from High	t_{DHZ}	Figures 8 and 10, C_L = 15pF, S2 closed			100	ns
Receiver Input to Output	t_{RPLH}, t_{RPHL}	Figures 11 and 13; | V_{ID} | ≥ 2.0V; rise and fall time of V_{ID} ≤ 15ns		127	200	ns
| t_{RPLH} - t_{RPHL} | Differential Receiver Skew	t_{RSKD}	Figures 11 and 13; | V_{ID} | ≥ 2.0V; rise and fall time of V_{ID} ≤ 15ns		3	±30	ns
Receiver Enable to Output Low	t_{RZL}	Figures 6 and 12, C_L = 100pF, S1 closed		20	50	ns
Receiver Enable to Output High	t_{RZH}	Figures 6 and 12, C_L = 100pF, S2 closed		20	50	ns
Receiver Disable Time from Low	t_{RLZ}	Figures 6 and 12, C_L = 100pF, S1 closed		20	50	ns
Receiver Disable Time from High	t_{RHZ}	Figures 6 and 12, C_L = 100pF, S2 closed		20	50	ns
Time to Shutdown	t_{SHDN}	(Note 5)	50	200	600	ns
Driver Enable from Shutdown-to-Output High	$t_{DZH(SHDN)}$	Figures 8 and 10, C_L = 15pF, S2 closed			4500	ns
Driver Enable from Shutdown-to-Output Low	$t_{DZL(SHDN)}$	Figures 8 and 10, C_L = 15pF, S1 closed			4500	ns
Receiver Enable from Shutdown-to-Output High	$t_{RZH(SHDN)}$	Figures 6 and 12, C_L = 100pF, S2 closed			3500	ns
Receiver Enable from Shutdown-to-Output Low	$t_{RZL(SHDN)}$	Figures 6 and 12, C_L = 100pF, S1 closed			3500	ns

SWITCHING CHARACTERISTICS—MAX3086E/MAX3087E/MAX3088E, and MAX3089E with SRL = GND

(V_{CC} = +5V ±5%, T_A = T_{MIN} to T_{MAX}, unless otherwise noted. Typical values are at V_{CC} = +5V and T_A = +25°C.)

PARAMETER	SYMBOL	CONDITIONS	MIN	TYP	MAX	UNITS
Driver Input-to-Output	t_{DPLH}	Figures 7 and 9, R_{DIFF} = 54Ω, C_{L1} = C_{L2} = 100pF		34	60	ns
	t_{DPHL}			34	60	
Driver Output Skew | t_{DPLH} - t_{DPHL} |	t_{DSKEW}	Figures 7 and 9, R_{DIFF} = 54Ω, C_{L1} = C_{L2} = 100pF		-2.5	±10	ns
Driver Rise or Fall Time	t_{DR}, t_{DF}	Figures 7 and 9, R_{DIFF} = 54Ω, C_{L1} = C_{L2} = 100pF		14	25	ns
Maximum Data Rate	f_{MAX}		10			Mbps
Driver Enable to Output High	t_{DZH}	Figures 8 and 10, C_L = 100pF, S2 closed			150	ns
Driver Enable to Output Low	t_{DZL}	Figures 8 and 10, C_L = 100pF, S1 closed			150	ns
Driver Disable Time from Low	t_{DLZ}	Figures 8 and 10, C_L = 15pF, S1 closed			100	ns
Driver Disable Time from High	t_{DHZ}	Figures 8 and 10, C_L = 15pF, S2 closed			100	ns
Receiver Input-to-Output	t_{RPLH}, t_{RPHL}	Figures 11 and 13; | V_{ID} | ≥ 2.0V; rise and fall time of V_{ID} ≤ 15ns		106	150	ns
| t_{RPLH} - t_{RPHL} | Differential Receiver Skew	t_{RSKD}	Figures 11 and 13; | V_{ID} | ≥ 2.0V; rise and fall time of V_{ID} ≤ 15ns		0	±10	ns
Receiver Enable to Output Low	t_{RZL}	Figures 6 and 12, C_L = 100pF, S1 closed		20	50	ns
Receiver Enable to Output High	t_{RZH}	Figures 6 and 12, C_L = 100pF, S2 closed		20	50	ns
Receiver Disable Time from Low	t_{RLZ}	Figures 6 and 12, C_L = 100pF, S1 closed		20	50	ns
Receiver Disable Time from High	t_{RHZ}	Figures 6 and 12, C_L = 100pF, S2 closed		20	50	ns
Time to Shutdown	t_{SHDN}	(Note 5)	50	200	600	ns
Driver Enable from Shutdown-to-Output High	$t_{DZH(SHDN)}$	Figures 8 and 10, C_L = 15pF, S2 closed			250	ns
Driver Enable from Shutdown-to-Output Low	$t_{DZL(SHDN)}$	Figures 8 and 10, C_L = 15pF, S1 closed			250	ns
Receiver Enable from Shutdown-to-Output High	$t_{RZH(SHDN)}$	Figures 6 and 12, C_L = 100pF, S2 closed			3500	ns
Receiver Enable from Shutdown-to-Output Low	$t_{RZL(SHDN)}$	Figures 6 and 12, C_L = 100pF, S1 closed			3500	ns

Note 5: The device is put into shutdown by bringing $\overline{RE}$ high and DE low. If the enable inputs are in this state for less than 50ns, the device is guaranteed not to enter shutdown. If the enable inputs are in this state for at least 600ns, the device is guaranteed to have entered shutdown.

Typical Operating Characteristics

(V_{CC} = +5V, T_A = +25°C, unless otherwise noted.)

NO-LOAD SUPPLY CURRENT vs. TEMPERATURE

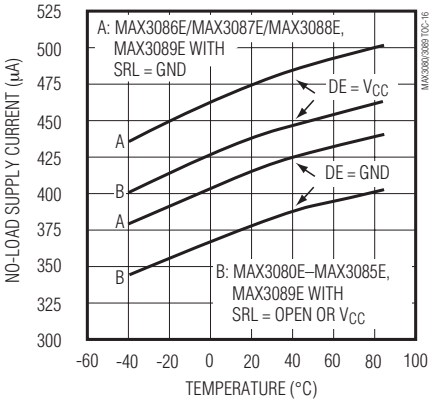

OUTPUT CURRENT vs. RECEIVER OUTPUT LOW VOLTAGE

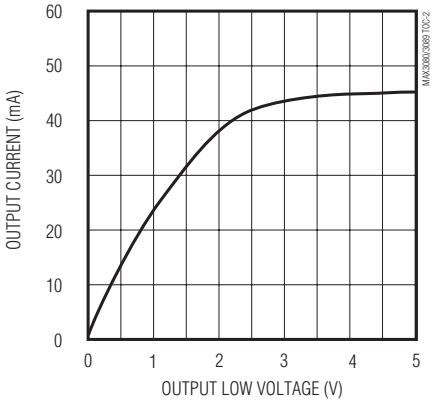

OUTPUT CURRENT vs. RECEIVER OUTPUT HIGH VOLTAGE

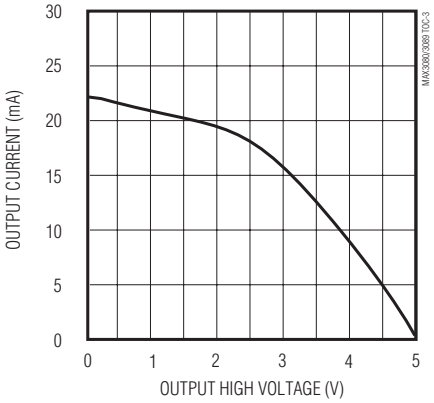

SHUTDOWN CURRENT vs. TEMPERATURE

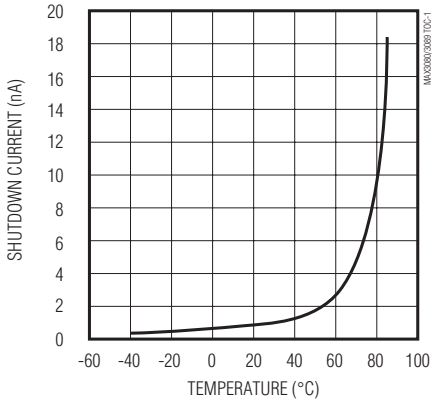

RECEIVER OUTPUT LOW VOLTAGE vs. TEMPERATURE

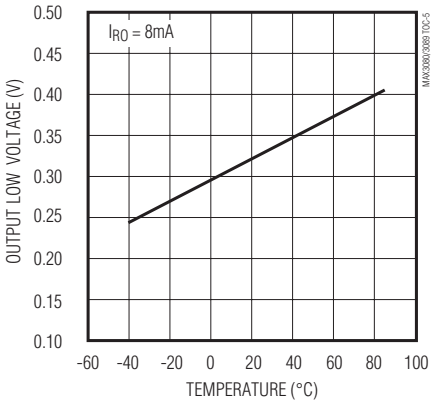

RECEIVER OUTPUT HIGH VOLTAGE vs. TEMPERATURE

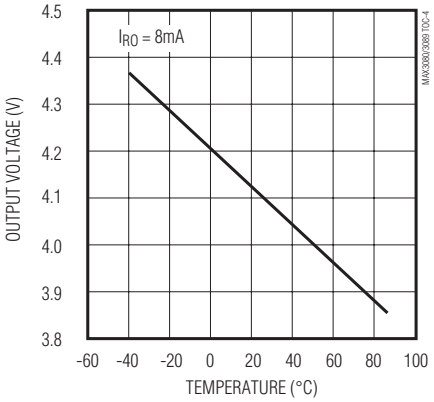

RECEIVER PROPAGATION DELAY (500kbps MODE) vs. TEMPERATURE

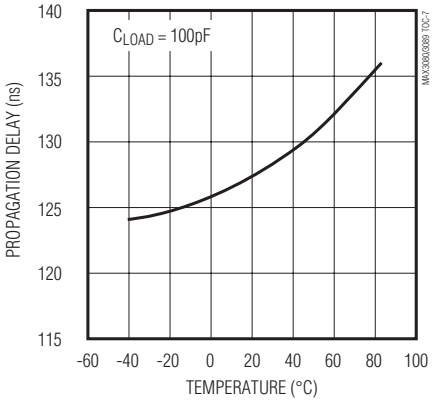

RECEIVER PROPAGATION DELAY (10Mbps MODE) vs. TEMPERATURE

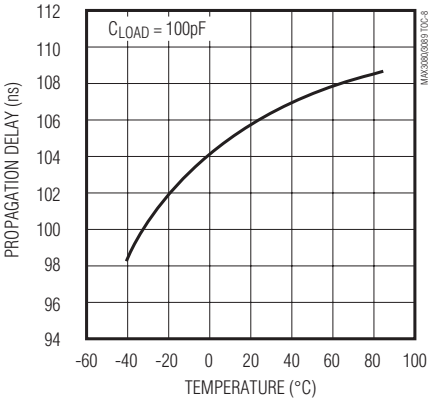

DRIVER PROPAGATION DELAY (115kbps MODE) vs. TEMPERATURE

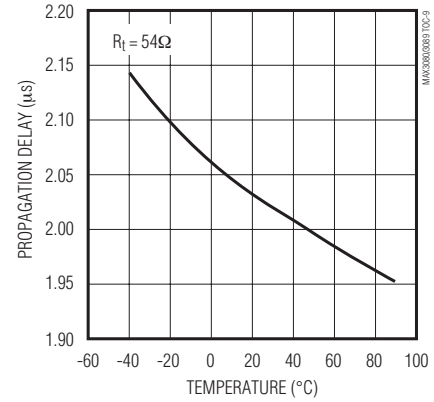

±15kV ESD-Protected, Fail-Safe, High-Speed (10Mbps), Slew-Rate-Limited RS-485/RS-422 Transceivers

Typical Operating Characteristics (continued)

(V_{CC} = +5V, T_A = +25°C, unless otherwise noted.)

DRIVER PROPAGATION DELAY (500kbps MODE) vs. TEMPERATURE

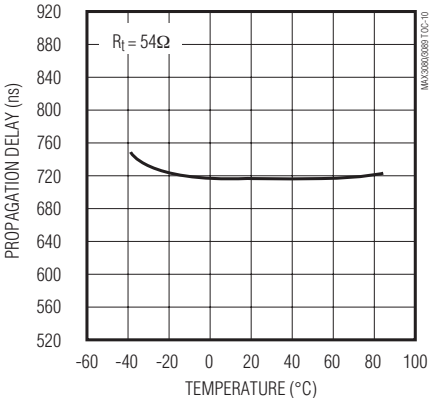

DRIVER PROPAGATION DELAY (10Mbps MODE) vs. TEMPERATURE

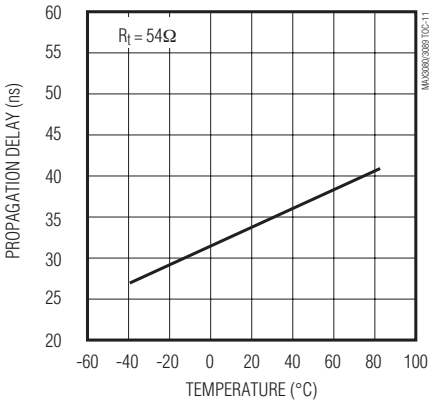

DRIVER DIFFERENTIAL OUTPUT VOLTAGE vs. TEMPERATURE

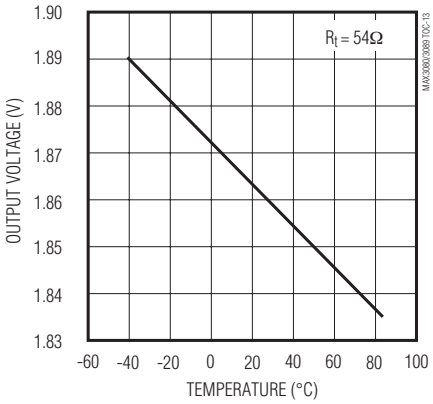

DRIVER OUTPUT CURRENT vs. DIFFERENTIAL OUTPUT VOLTAGE

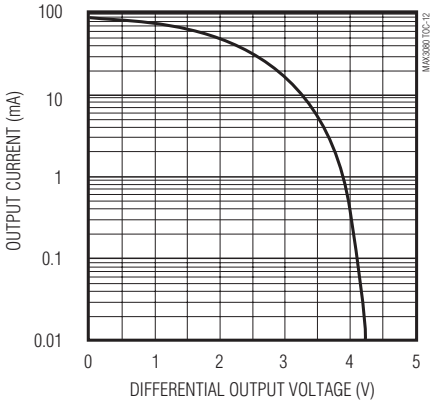

OUTPUT CURRENT vs. DRIVER OUTPUT LOW VOLTAGE

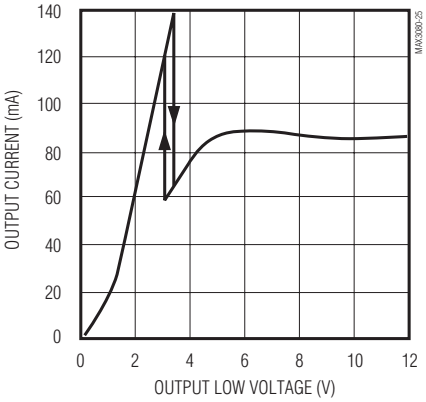

OUTPUT CURRENT vs. DRIVER OUTPUT HIGH VOLTAGE

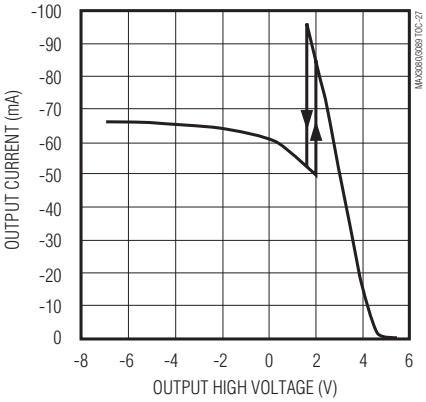

Typical Operating Characteristics (continued)

(V_{CC} = +5V, T_A = +25°C, unless otherwise noted.)

RECEIVER PROPAGATION DELAY
MAX3086E/MAX3087E/MAX3088E AND MAX3089E
WITH SRL = GND

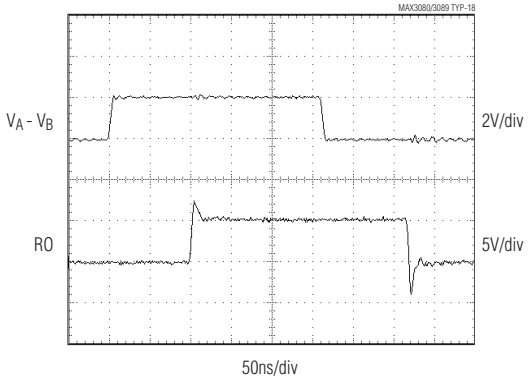

RECEIVER PROPAGATION DELAY
MAX3080E–MAX3085E AND MAX3089E
WITH SRL = OPEN OR V_{CC}

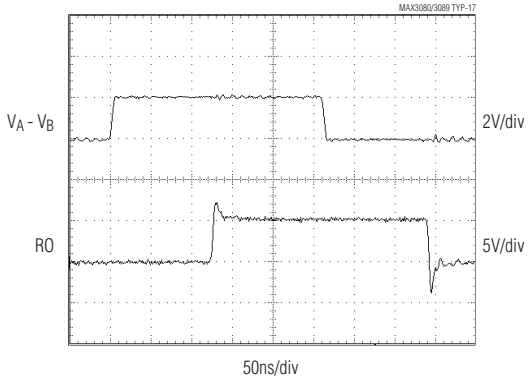

DRIVER PROPAGATION DELAY
MAX3080E/MAX3081E/MAX3082E AND MAX3089E
WITH SRL = OPEN

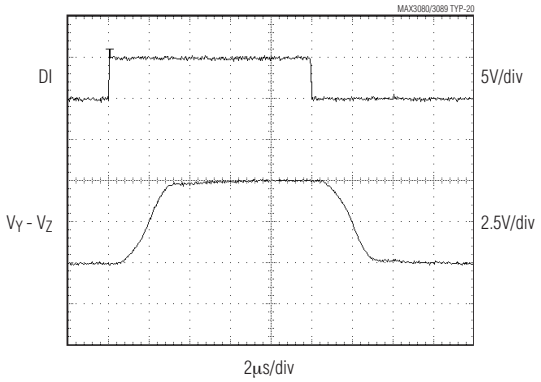

DRIVER PROPAGATION DELAY
MAX3083E/MAX3084E/MAX3085E AND MAX3089E
WITH SRL = V_{CC}

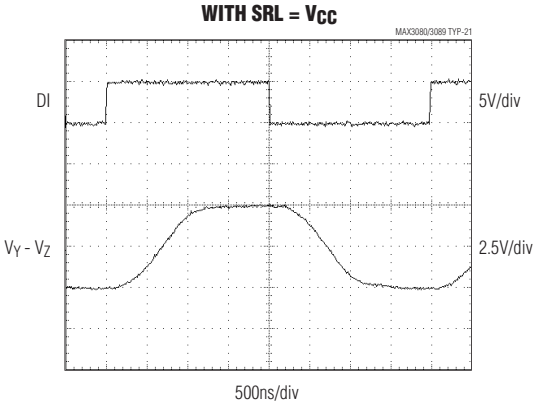

DRIVER PROPAGATION DELAY
MAX3086E/MAX3087E/MAX3088E AND MAX3089E
WITH SRL = GND

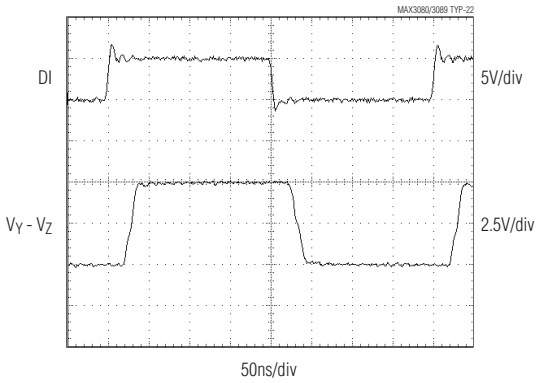

Pin Description

PIN					NAME	FUNCTION
MAX3080E MAX3083E MAX3086E	MAX3081E MAX3084E MAX3087E	MAX3082E MAX3085E MAX3088E	MAX3089E			
FULL-DUPLEX DEVICES		HALF-DUPLEX DEVICES	FULL-DUPLEX MODE	HALF-DUPLEX MODE		
—	—	—	1	1	H/$\overline{F}$	Half/Full-Duplex Selector Pin. Connect H/$\overline{F}$ to V_{CC} for half-duplex mode; connect to GND or leave unconnected for full-duplex mode.
2	2	1	2	2	RO	Receiver Output. When $\overline{RE}$ is low and if A - B ≥ -50mV, RO will be high; if A - B ≤ -200mV, RO will be low.
3	—	2	3	3	$\overline{RE}$	Receiver Output Enable. Drive $\overline{RE}$ low to enable RO; RO is high impedance when $\overline{RE}$ is high. Drive $\overline{RE}$ high and DE low to enter low-power shutdown mode.
4	—	3	4	4	DE	Driver Output Enable. Drive DE high to enable driver outputs. These outputs are high impedance when DE is low. Drive $\overline{RE}$ high and DE low to enter low-power shutdown mode.
5	3	4	5	5	DI	Driver Input. With DE high, a low on DI forces noninverting output low and inverting output high. Similarly, a high on DI forces non-inverting output high and inverting output low.
—	—	—	6	6	SRL	Slew-Rate-Limit Selector Pin. Connect SRL to GND for 10Mbps communication rate; connect to V_{CC} for 500kbps communication rate. Leave unconnected for 115kbps communication rate.
6, 7	4	5	7	7	GND	Ground
—	—	—	8	8	TXP	Transmitter Phase. Connect TXP to GND, or leave floating for normal transmitter phase/polarity. Connect to V_{CC} to invert the transmitter phase/polarity.
9	5	—	9	—	Y	Noninverting Driver Output
—	—	—	—	9	Y	Noninverting Receiver Input and Noninverting Driver Output*
10	6	—	10	—	Z	Inverting Driver Output
—	—	—	—	10	Z	Inverting Receiver Input and Inverting Driver Output*
11	7	—	11	—	B	Inverting Receiver Input
—	—	—	—	11	B	Receiver Input Resistors*
—	—	7	—	—	B	Inverting Receiver Input and Inverting Driver Output

Pin Description (continued)

PIN					NAME	FUNCTION
MAX3080E MAX3083E MAX3086E	MAX3081E MAX3084E MAX3087E	MAX3082E MAX3085E MAX3088E	MAX3089E			
FULL-DUPLEX DEVICES		HALF-DUPLEX DEVICES	FULL-DUPLEX MODE	HALF-DUPLEX MODE		
12	8	—	12	—	A	Noninverting Receiver Input
—	—	—	—	12	A	Receiver Input Resistors*
—	—	6	—	—	A	Noninverting Receiver Input and Noninverting Driver Output
—	—	—	13	13	RXP	Receiver Phase. Connect RXP to GND, or leave unconnected for normal receiver phase/polarity. Connect to V_{CC} to invert the receiver phase/polarity.
14	1	8	14	14	V_{CC}	Positive Supply 4.75V ≤ V_{CC} ≤ 5.25V
1, 8, 13	—	—	—	—	N.C.	Not Connected. Not internally connected.

(MAX3089E only). In half-duplex mode, the driver outputs serve as receiver inputs. The full-duplex receiver inputs (A and B) will still have a 1/8-unit load, but are not connected to the receiver.

Function Tables

MAX3080E/MAX3083E/MAX3086E

TRANSMITTING				
INPUTS			OUTPUTS	
$\overline{RE}$	DE	DI	Z	Y
X	1	1	0	1
X	1	0	1	0
0	0	X	High-Z	High-Z
1	0	X	Shutdown	

RECEIVING			
INPUTS			OUTPUT
$\overline{RE}$	DE	A - B	RO
0	X	≥ -0.05V	1
0	X	≤ -0.2V	0
0	X	Open/shorted	1
1	1	X	High-Z
1	0	X	Shutdown

X = Don't care
Shutdown mode, driver and receiver outputs high impedance

MAX3081E/MAX3084E/MAX3087E

TRANSMITTING		
INPUT	OUTPUTS	
DI	Z	Y
1	0	1
0	1	0

RECEIVING	
INPUTS	OUTPUT
A - B	RO
≥ -0.05V	1
≤ -0.2V	0
Open/shorted	1

±15kV ESD-Protected, Fail-Safe, High-Speed (10Mbps), Slew-Rate-Limited RS-485/RS-422 Transceivers

Function Tables (continued)

MAX3082E/MAX3085E/MAX3088E

TRANSMITTING				
INPUTS			OUTPUTS	
$\overline{RE}$	DE	DI	B/Z	A/Y
X	1	1	0	1
X	1	0	1	0
0	0	X	High-Z	High-Z
1	0	X	Shutdown	

RECEIVING			
INPUTS			OUTPUT
$\overline{RE}$	DE	A - B	RO
0	X	≥ -0.05V	1
0	X	≤ -0.2V	0
0	X	Open/shorted	1
1	1	X	High-Z
1	0	X	Shutdown

X = Don't care
Shutdown mode, driver and receiver outputs high impedance

MAX3089E

TRANSMITTING					
INPUTS				OUTPUTS	
TXP	$\overline{RE}$	DE	DI	Z	Y
0	X	1	1	0	1
0	X	1	0	1	0
1	X	1	1	1	0
1	X	1	0	0	1
X	0	0	X	High-Z	High-Z
X	1	0	X	Shutdown	

RECEIVING						
INPUTS						OUTPUT
H/$\overline{F}$	RXP	$\overline{RE}$	DE	A - B	Y - Z	RO
0	0	0	X	≥ -0.05V	X	1
0	0	0	X	≤ -0.2V	X	0
0	1	0	X	≥ -0.05V	X	0
0	1	0	X	≤ -0.2V	X	1
1	0	0	0	X	≥ -0.05V	1
1	0	0	0	X	≤ -0.2V	0
1	1	0	0	X	≥ -0.05V	0
1	1	0	0	X	≤ -0.2V	1
0	0	0	X	Open/ shorted	X	1
1	0	0	0	X	Open/ shorted	1
0	1	0	X	Open/ shorted	X	0
1	1	0	0	X	Open/ shorted	0
X	X	1	1	X	X	High-Z
X	X	1	0	X	X	Shutdown

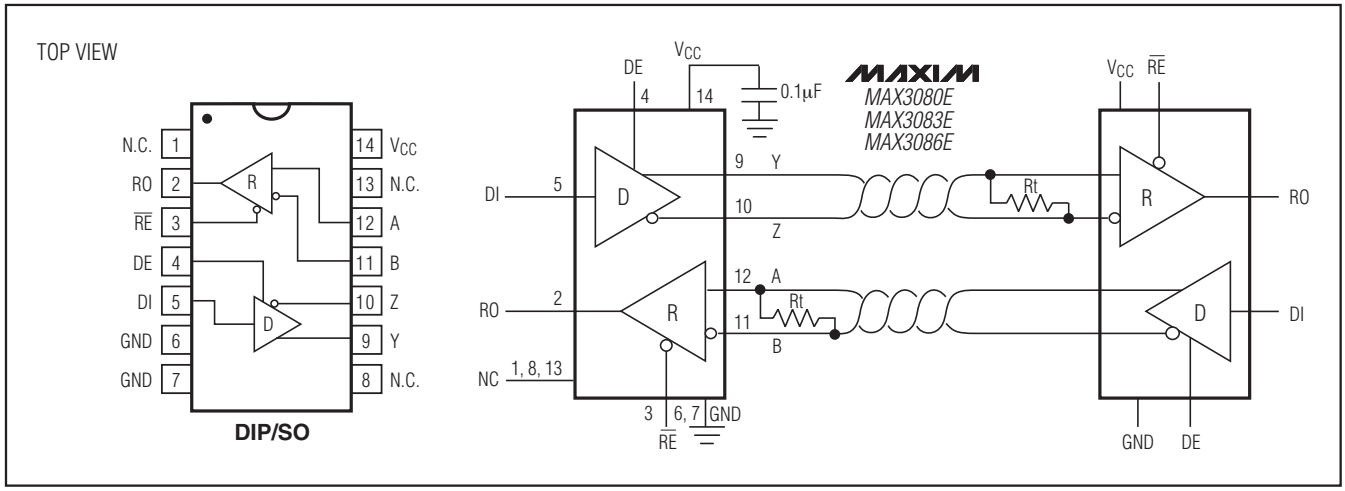

Figure 1. MAX3080E/MAX3083E/MAX3086E Pin Configuration and Typical Full-Duplex Operating Circuit

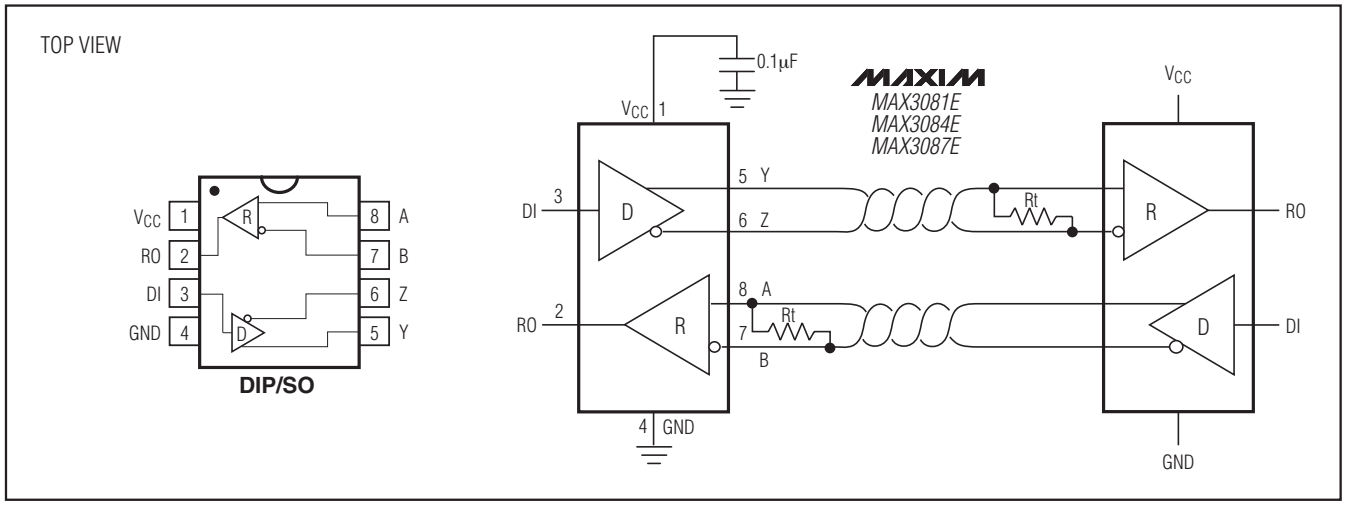

Figure 2. MAX3081E/MAX3084E/MAX3087E Pin Configuration and Typical Full-Duplex Operating Circuit

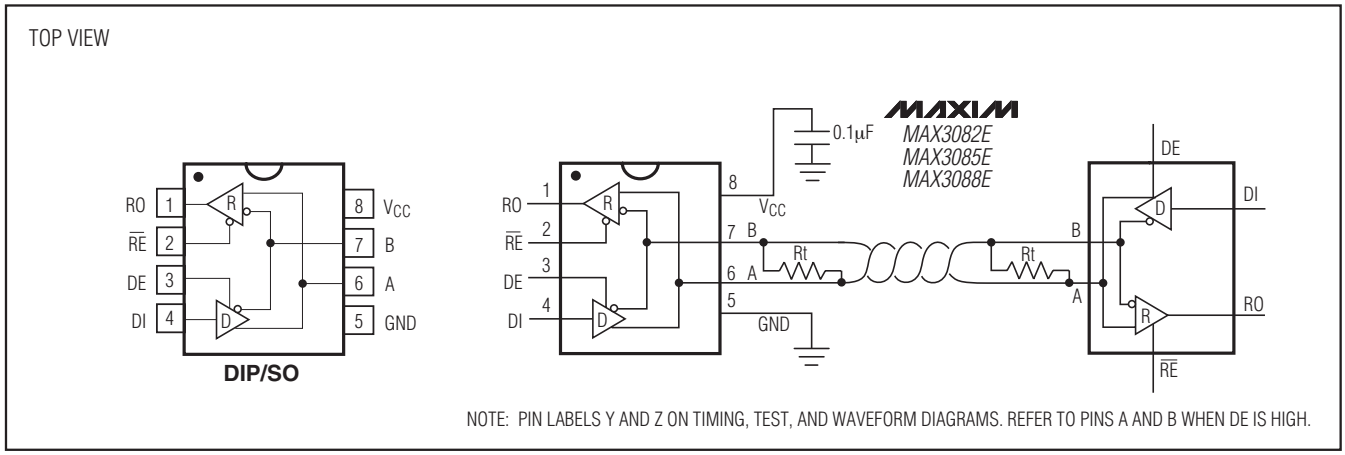

Figure 3. MAX3082E/MAX3085E/MAX3088E Pin Configuration and Typical Half-Duplex Operating Circuit

±15kV ESD-Protected, Fail-Safe, High-Speed (10Mbps), Slew-Rate-Limited RS-485/RS-422 Transceivers

Detailed Description

The MAX3080E–MAX3089E high-speed transceivers for RS-485/RS-422 communication contain one driver and one receiver. These devices feature fail-safe circuitry, which guarantees a logic-high receiver output when the receiver inputs are open or shorted, or when they are connected to a terminated transmission line with all drivers disabled (see the *Fail-Safe* section). The MAX3080E/MAX3081E/MAX3082E feature reduced slew-rate drivers that minimize EMI and reduce reflections caused by improperly terminated cables, allowing error-free data transmission up to 115kbps (see the *Reduced EMI and Reflections* section). The MAX3083E/MAX3084E/MAX3085E offer higher driver output slew-rate limits, allowing transmit speeds up to 500kbps. The MAX3086E/MAX3087E/MAX3088E's driver slew rates are not limited, making transmit speeds up to 10Mbps possible. The MAX3089E's slew rate is selectable between 115kbps, 500kbps, and 10Mbps by driving a selector pin with a three-state driver.

The MAX3082E/MAX3085E/MAX3088E are half-duplex transceivers, while the MAX3080E/MAX3081E/MAX3083E/MAX3084E/MAX3086E/MAX3087E are full-duplex transceivers. The MAX3089E is selectable between half- and full-duplex communication by driving a selector pin high or low, respectively.

All of these parts operate from a single +5V supply. Drivers are output short-circuit current limited. Thermal shutdown circuitry protects drivers against excessive power dissipation. When activated, the thermal shutdown circuitry places the driver outputs into a high-impedance state.

Receiver Input Filtering

The receivers of the MAX3080E–MAX3085E, and the MAX3089E when operating in 115kbps or 500kbps mode, incorporate input filtering in addition to input hysteresis. This filtering enhances noise immunity with differential signals that have very slow rise and fall times. Receiver propagation delay increases by 20% due to this filtering.

Fail-Safe

The MAX3080E family **guarantees** a logic-high receiver output when the receiver inputs are shorted or open, or when they are connected to a terminated transmission line with all drivers disabled. This is done by setting the receiver threshold between -50mV and -200mV. If the differential receiver input voltage (A - B) is greater than or equal to -50mV, RO is logic high. If A - B is less than or equal to -200mV, RO is logic low. In the case of a terminated bus with all transmitters disabled, the receiver's differential input voltage is pulled to 0V by the termination. With the receiver thresholds of the MAX3080E family, this results in a logic high with a 50mV minimum noise margin. Unlike previous fail-safe devices, the -50mV to -200mV threshold complies with the ±200mV EIA/TIA-485 standard.

MAX3089E Programming

The MAX3089E has several programmable operating modes. Transmitter rise and fall times are programmable between 2500ns, 750ns, and 25ns, resulting in maximum data rates of 115kbps, 500kbps, and 10Mbps, respectively. To select the desired data rate, drive SRL to one of three possible states by using a three-state driver, by connecting it to V_{CC} or GND, or by leaving it unconnected. For 115kbps operation, set the three-state device in high-impedance mode or leave SRL unconnected. For 500kbps operation, drive SRL high or connect it to V_{CC}. For 10Mbps operation, drive SRL low or connect it to GND. SRL can be changed during operation without interrupting data communications.

Occasionally, twisted-pair lines are connected backward from normal orientation. The MAX3089E has two pins that invert the phase of the driver and the receiver to correct for this problem. For normal operation, drive TXP and RXP low, connect them to ground, or leave them unconnected (internal pulldown). To invert the driver phase, drive TXP high or connect it to V_{CC}. To invert the receiver phase, drive RXP high or connect it to V_{CC}. Note that the receiver threshold is positive when RXP is high.

The MAX3089E can operate in full- or half-duplex mode. Drive the H/$\overline{F}$ pin low, leave it unconnected (internal pulldown), or connect it to GND for full-duplex operation, and drive it high for half-duplex operation. In full-duplex mode, the pin configuration of the driver and receiver is the same as that of a MAX3080E (Figure 4). In half-duplex mode, the receiver inputs are switched to the driver outputs, connecting outputs Y and Z to inputs A and B, respectively. In half-duplex mode, the internal full-duplex receiver input resistors are still connected to pins 11 and 12.

±15kV ESD Protection

As with all Maxim devices, ESD-protection structures are incorporated on all pins to protect against electrostatic discharges encountered during handling and assembly. The driver outputs and receiver inputs of the MAX3080E–MAX3089E family have extra protection against static electricity. Maxim's engineers have developed state-of-the-art structures to protect these pins against ESD of ±15kV without damage.

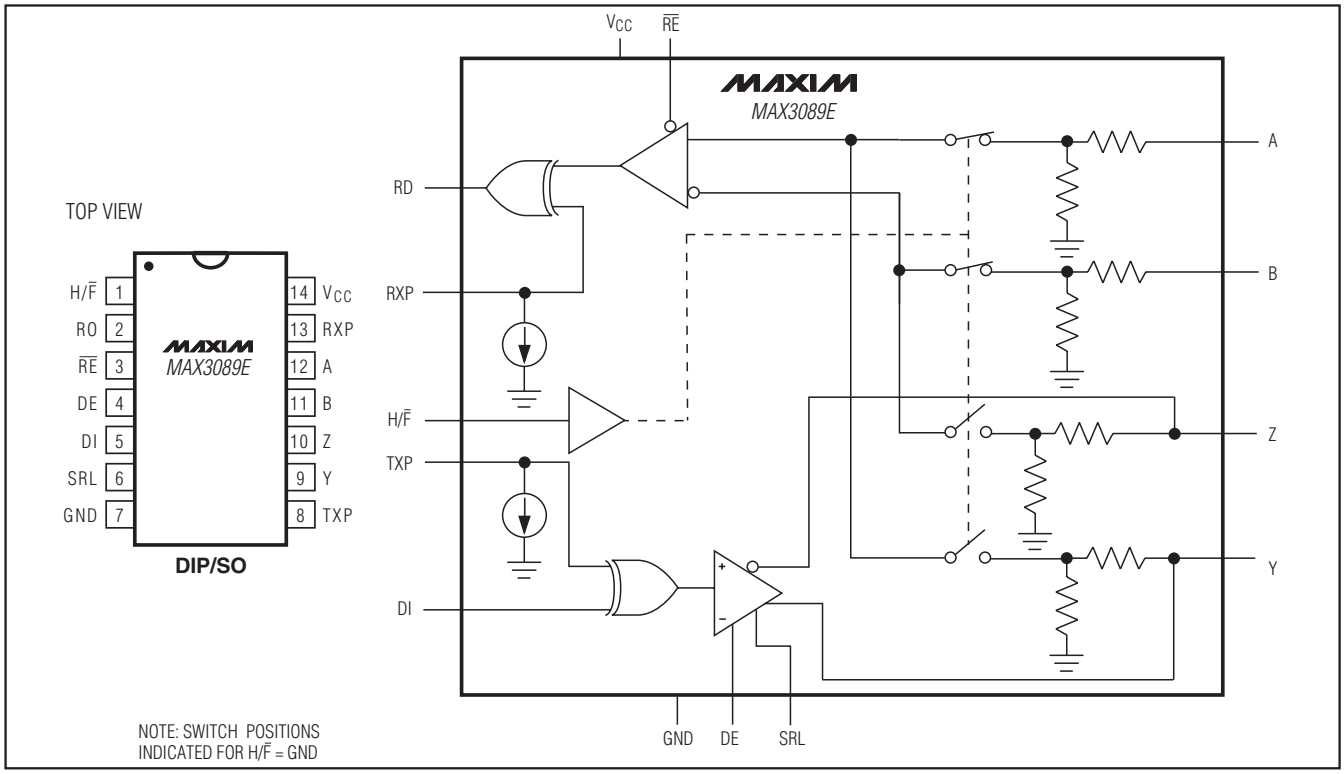

Figure 4. MAX3089E Pin Configuration and Functional Diagram

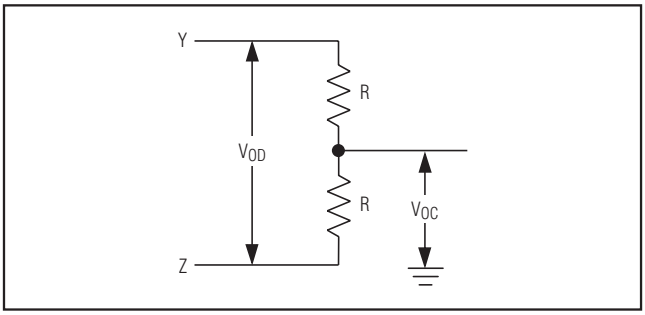

Figure 5. Driver DC Test Load

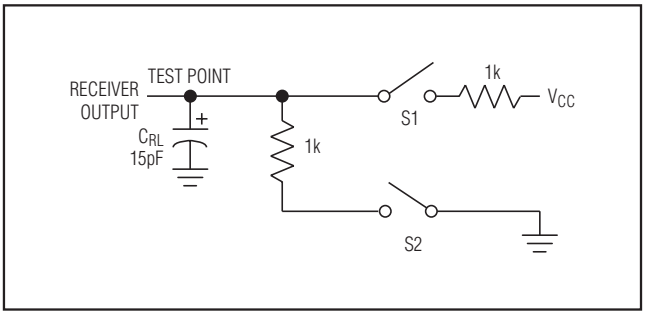

Figure 6. Receiver Enable/Disable Timing Test Load

The ESD-protected pins are tested with reference to the ground pin in a powered-down condition. They are tested to ±15kV using the Human Body Model.

ESD Test Conditions

ESD performance depends on a variety of conditions. Contact Maxim for a reliability report that documents test setup, test methodology, and test results.

Human Body Model

Figure 14a shows the Human Body Model, and Figure 14b shows the current waveform it generates when discharged into a low impedance. This model consists of a 100pF capacitor charged to the ESD voltage of interest, which is then discharged into the test device through a 1.5kΩ resistor.

Machine Model

The Machine Model for ESD tests all pins using a 200pF storage capacitor and zero discharge resistance. The objective is to emulate the stress caused when I/O pins are contacted by handling equipment during test and assembly. All pins require this protection, not just RS-485 inputs and outputs.

±15kV ESD-Protected, Fail-Safe, High-Speed (10Mbps), Slew-Rate-Limited RS-485/RS-422 Transceivers

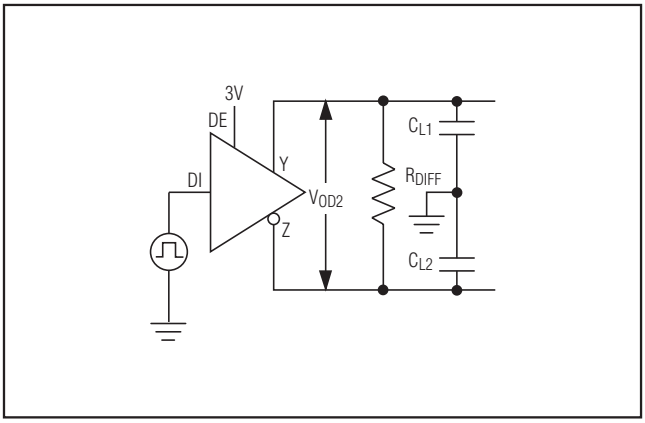

Figure 7. Driver Timing Test Circuit

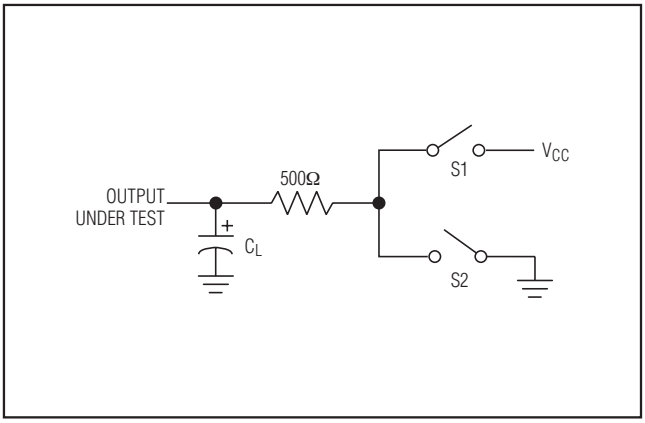

Figure 8. Driver Enable and Disable Timing Test Load

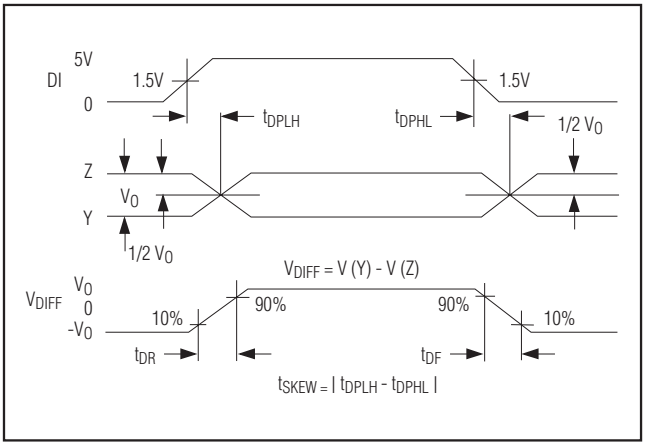

Figure 9. Driver Propagation Delays

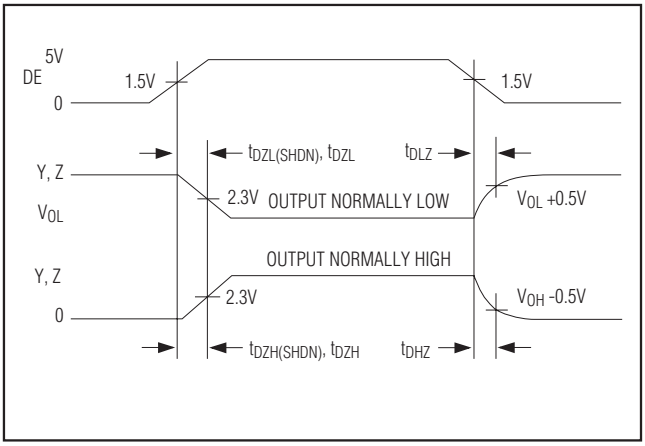

Figure 10. Driver Enable and Disable Times (Except MAX3081E/MAX3084E/MAX3087E)

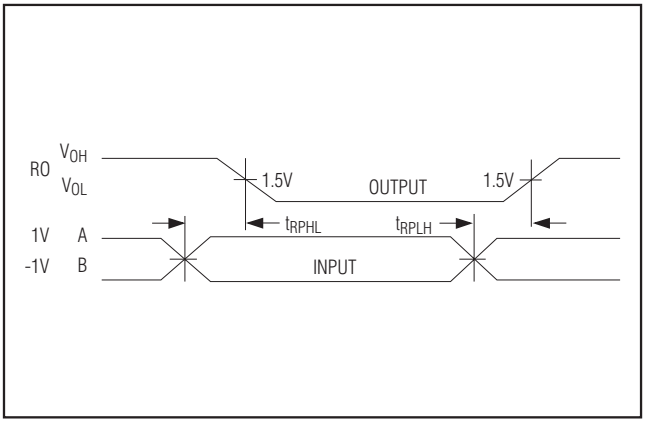

Figure 11. Receiver Propagation Delays

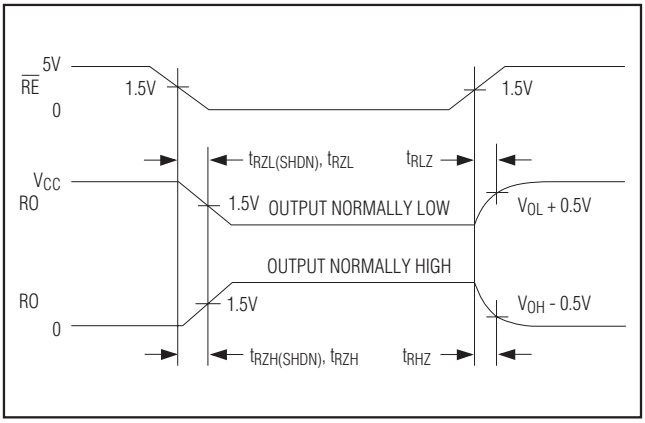

Figure 12. Receiver Enable and Disable Times (Except MAX3081E/MAX3084E/MAX3087E)

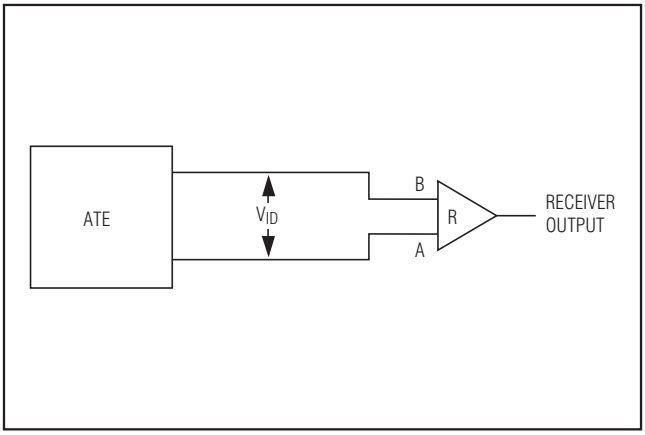

Figure 13. Receiver Propagation Delay Test Circuit

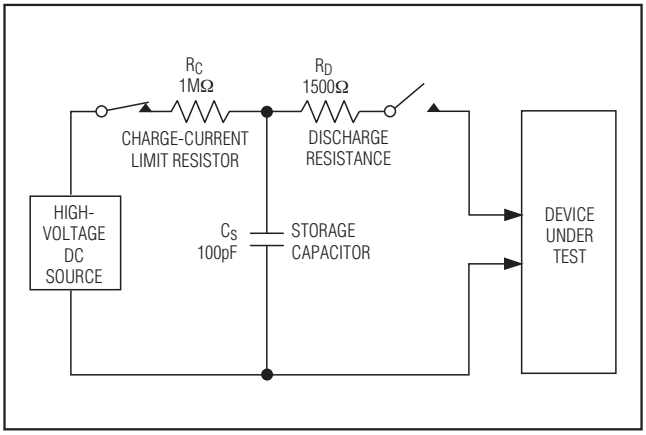

Figure 14a. Human Body ESD Test Model

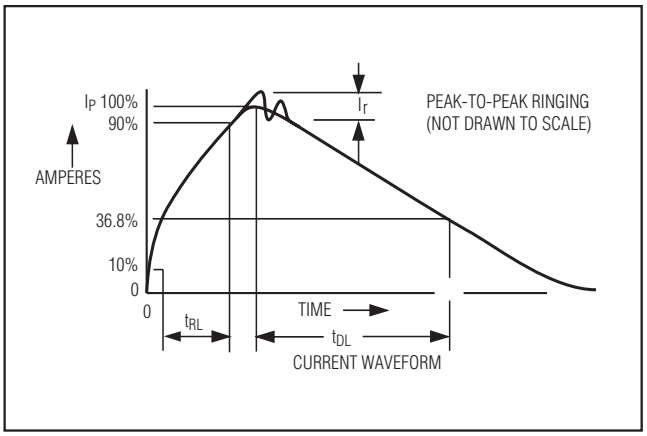

Figure 14b. Human Body Current Waveform

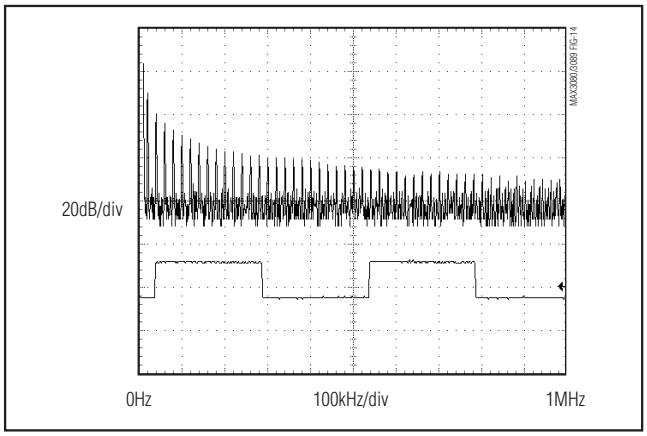

Figure 15. Driver Output Waveform and FFT Plot of MAX3086E/MAX3087E/MAX3088E, and MAX3089E with SRL = GND, Transmitting a 20kHz Signal

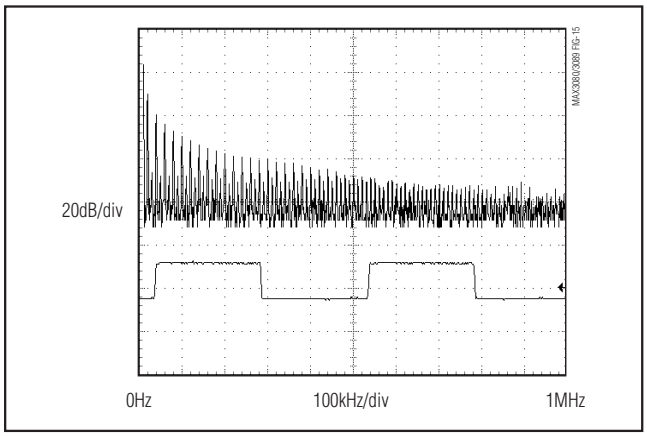

Figure 16. Driver Output Waveform and FFT Plot of MAX3083E/MAX3084E/MAX3085E, and MAX3089E with SRL = V_{CC}, Transmitting a 20kHz Signal

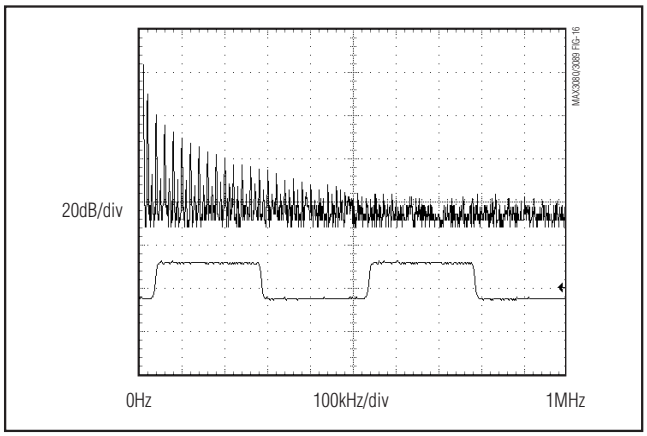

Figure 17. Driver Output Waveform and FFT Plot of MAX3080E/MAX3081E/MAX3082E, and MAX3089E with SRL = Unconnected, Transmitting a 20kHz Signal

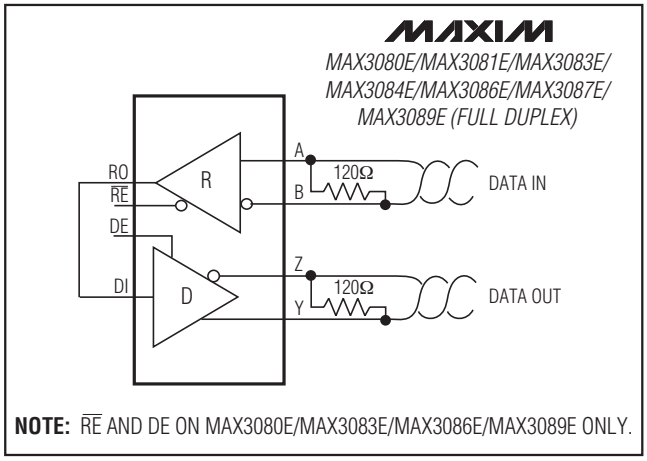

Figure 18. Line Repeater for MAX3080E/MAX3081E/MAX3083E/MAX3084E/MAX3086E/MAX3087E, and MAX3089E in Full-Duplex Mode

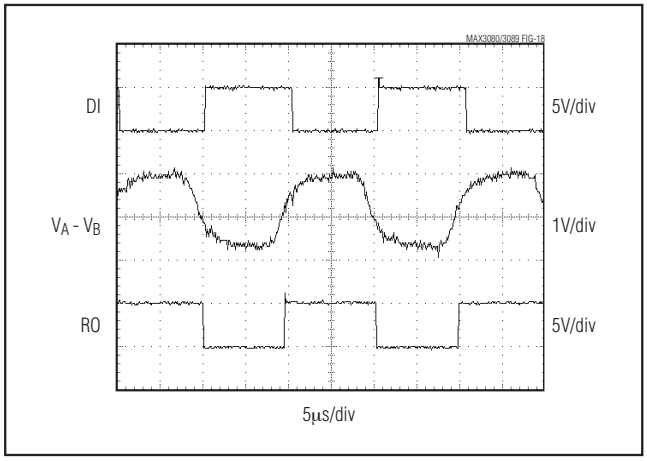

Figure 19. MAX3080E/MAX3081E/MAX3082E, and MAX3089E with SRL = Unconnected, System Differential Voltage at 50kHz Driving 4000ft of Cable

Applications Information

256 Transceivers on the Bus

The standard RS-485 receiver input impedance is 12kΩ (one-unit load), and the standard driver can drive up to 32 unit loads. The MAX3080E family of transceivers have a 1/8-unit-load receiver input impedance (96kΩ), allowing up to 256 transceivers to be connected in parallel on one communication line. Any combination of these devices and/or other RS-485 transceivers with a total of 32 unit loads or less can be connected to the line.

Reduced EMI and Reflections

The MAX3080E–MAX3085E, and MAX3089E with SRL = V_{CC} or unconnected, are slew-rate limited, minimizing EMI and reducing reflections caused by improperly terminated cables. Figure 15 shows the driver output waveform and its Fourier analysis of a 20kHz signal transmitted by a MAX3086E/MAX3087E/MAX3088E, and MAX3089E with SRL = GND. High-frequency harmonic components with large amplitudes are evident. Figure 16 shows the same signal displayed for a MAX3083E/MAX3084E/MAX3085E, and MAX3089E with SRL = V_{CC}, transmitting under the same conditions. Figure 16's high-frequency harmonic components are much lower in amplitude, compared with Figure 15's, and the potential for EMI is significantly reduced. Figure 17 shows the same signal displayed for a MAX3080E/MAX3081E/MAX3082E, and MAX3089E with SRL = unconnected, transmitting under the same conditions. Figure 17's high-frequency harmonic components are even lower.

In general, a transmitter's rise time relates directly to the length of an unterminated stub, which can be driven with only minor waveform reflections. The following equation expresses this relationship conservatively:

$$\text{Length} = t_{RISE} / (10 \times 1.5\text{ns/ft})$$

where t_{RISE} is the transmitter's rise time.

For example, the MAX3080E's rise time is typically 1320ns, which results in excellent waveforms with a stub length up to 90 feet. A system can work well with longer unterminated stubs, even with severe reflections, if the waveform settles out before the UART samples them.

Low-Power Shutdown Mode (Except MAX3082E/MAX3085E/MAX3088E)

Low-power shutdown mode is initiated by bringing both $\overline{RE}$ high and DE low. In shutdown, the devices typically draw only 1nA of supply current.

$\overline{RE}$ and DE may be driven simultaneously; the parts are guaranteed not to enter shutdown if $\overline{RE}$ is high and DE is low for less than 50ns. If the inputs are in this state for at least 600ns, the parts are guaranteed to enter shutdown.

Enable times t_{ZH} and t_{ZL} in the *Switching Characteristics* tables assume the part was not in a low-power shutdown state. Enable times $t_{ZH(SHDN)}$ and $t_{ZL(SHDN)}$ assume the parts were shut down. It takes drivers and receivers longer to become enabled from low-power shutdown mode ($t_{ZH(SHDN)}$, $t_{ZL(SHDN)}$) than from driver/receiver-disable mode (t_{ZH}, t_{ZL}).

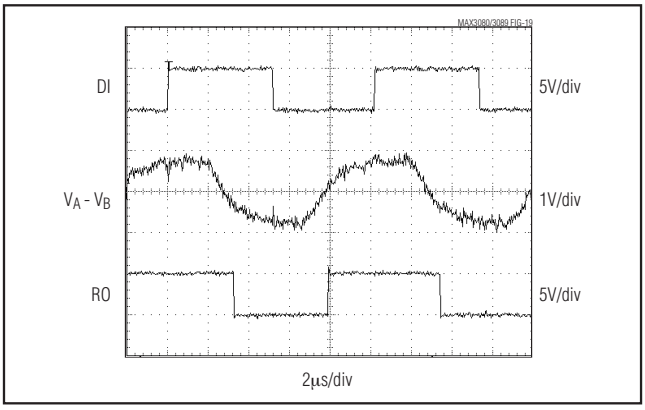

Figure 20. MAX3083E/MAX3084E/MAX3085E, and MAX3089E with SRL = V_{CC}, System Differential Voltage at 50kHz Driving 4000ft of Cable

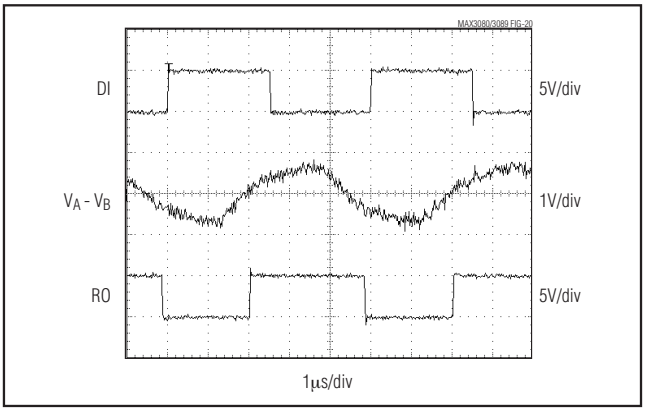

Figure 21. MAX3086E/MAX3087E/MAX3088E, and MAX3089E with SRL = GND, System Differential Voltage at 200kHz Driving 4000ft of Cable

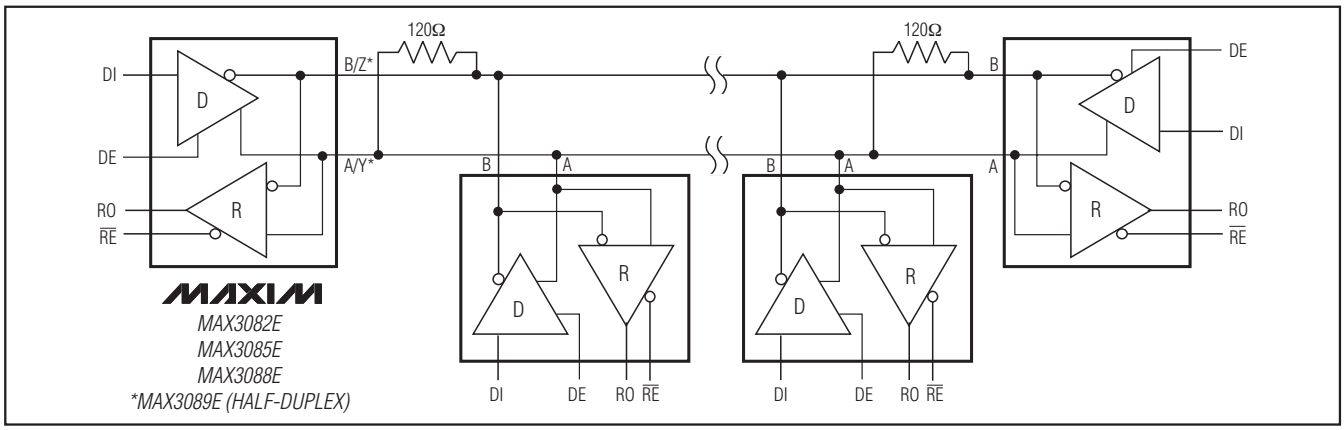

Figure 22. Typical Half-Duplex RS-485 Network

Driver Output Protection

Two mechanisms prevent excessive output current and power dissipation caused by faults or by bus contention. The first, a foldback current limit on the output stage, provides immediate protection against short circuits over the whole common-mode voltage range (see *Typical Operating Characteristics*). The second, a thermal shutdown circuit, forces the driver outputs into a high-impedance state if the die temperature becomes excessive.

Line Length vs. Data Rate

The RS-485/RS-422 standard covers line lengths up to 4000 feet. For line lengths greater than 4000 feet, use the repeater application shown in Figure 18.

Figures 19, 20, and 21 show the system differential voltage for the parts driving 4000 feet of 26AWG twisted-pair wire at 110kHz into 120Ω loads.

Typical Applications

The MAX3082E/MAX3085E/MAX3088E/MAX3089E transceivers are designed for bidirectional data communications on multipoint bus transmission lines. Figures 22 and 23 show typical network applications circuits. These parts can also be used as line repeaters, with cable lengths longer than 4000 feet, as shown in Figure 18.

To minimize reflections, the line should be terminated at both ends in its characteristic impedance, and stub lengths off the main line should be kept as short as possible. The slew-rate-limited MAX3082E/MAX3085E, and the two modes of the MAX3089E, are more tolerant of imperfect termination.

±15kV ESD-Protected, Fail-Safe, High-Speed (10Mbps), Slew-Rate-Limited RS-485/RS-422 Transceivers

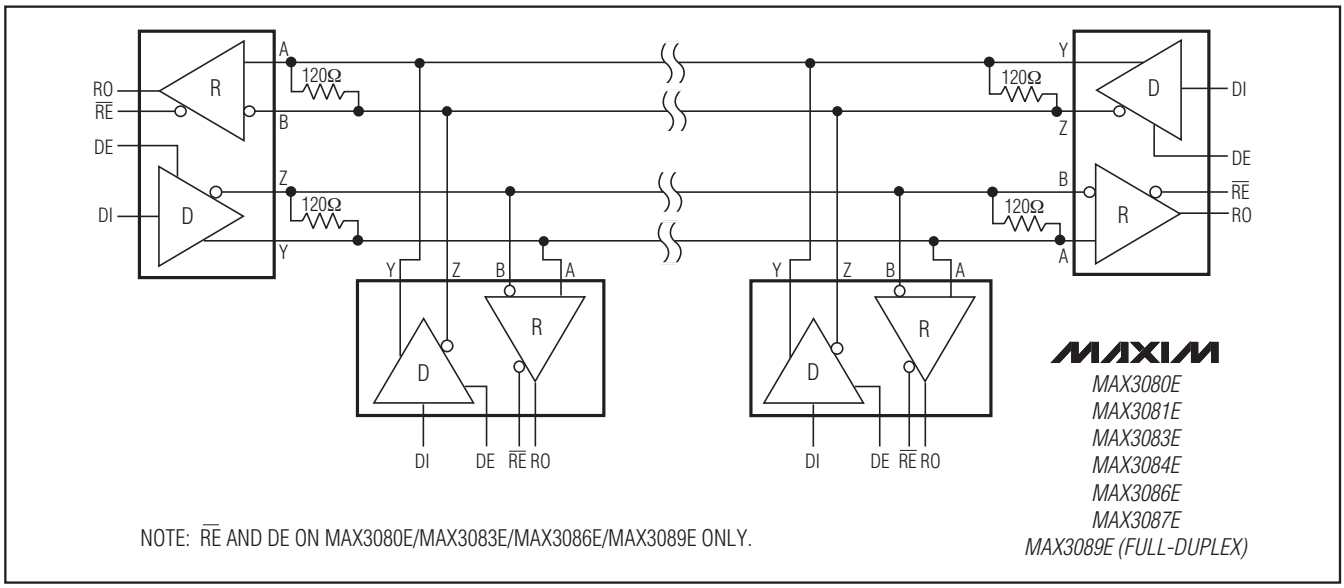

Figure 23. Typical Full-Duplex RS-485 Network

Ordering Information (continued)

PART	TEMP. RANGE	PIN-PACKAGE
MAX3081ECSA	0°C to +70°C	8 SO
MAX3081ECPA	0°C to +70°C	8 Plastic DIP
MAX3081EESA	-40°C to +85°C	8 SO
MAX3081EEPA	-40°C to +85°C	8 Plastic DIP
MAX3082ECSA	0°C to +70°C	8 SO
MAX3082ECPA	0°C to +70°C	8 Plastic DIP
MAX3082EESA	-40°C to +85°C	8 SO
MAX3082EEPA	-40°C to +85°C	8 Plastic DIP
MAX3083ECSD	0°C to +70°C	14 SO
MAX3083ECPD	0°C to +70°C	14 Plastic DIP
MAX3083EESD	-40°C to +85°C	14 SO
MAX3083EEPD	-40°C to +85°C	14 Plastic DIP
MAX3084ECSA	0°C to +70°C	8 SO
MAX3084ECPA	0°C to +70°C	8 Plastic DIP
MAX3084EESA	-40°C to +85°C	8 SO
MAX3084EEPA	-40°C to +85°C	8 Plastic DIP
MAX3085ECSA	0°C to +70°C	8 SO
MAX3085ECPA	0°C to +70°C	8 Plastic DIP
MAX3085EESA	-40°C to +85°C	8 SO
MAX3085EEPA	-40°C to +85°C	8 Plastic DIP

PART	TEMP. RANGE	PIN-PACKAGE
MAX3086ECSD	0°C to +70°C	14 SO
MAX3086ECPD	0°C to +70°C	14 Plastic DIP
MAX3086EESD	-40°C to +85°C	14 SO
MAX3086EEPD	-40°C to +85°C	14 Plastic DIP
MAX3087ECSA	0°C to +70°C	8 SO
MAX3087ECPA	0°C to +70°C	8 Plastic DIP
MAX3087EESA	-40°C to +85°C	8 SO
MAX3087EEPA	-40°C to +85°C	8 Plastic DIP
MAX3088ECSA	0°C to +70°C	8 SO
MAX3088ECPA	0°C to +70°C	8 Plastic DIP
MAX3088EESA	-40°C to +85°C	8 SO
MAX3088EEPA	-40°C to +85°C	8 Plastic DIP
MAX3089ECSD	0°C to +70°C	14 SO
MAX3089ECPD	0°C to +70°C	14 Plastic DIP
MAX3089EESD	-40°C to +85°C	14 SO
MAX3089EEPD	-40°C to +85°C	14 Plastic DIP

Revision History

Pages changed at Rev 1: 1, 19, 20

Maxim cannot assume responsibility for use of any circuitry other than circuitry entirely embodied in a Maxim product. No circuit patent licenses are implied. Maxim reserves the right to change the circuitry and specifications without notice at any time.

© 2006 Maxim Integrated Products MAXIM is a registered trademark of Maxim Integrated Products, Inc.