KEMET Part Number: A700X187M006ATE015

Capacitor, aluminum, 180 uF, +/-20% Tol, 6.3 VDC@125C

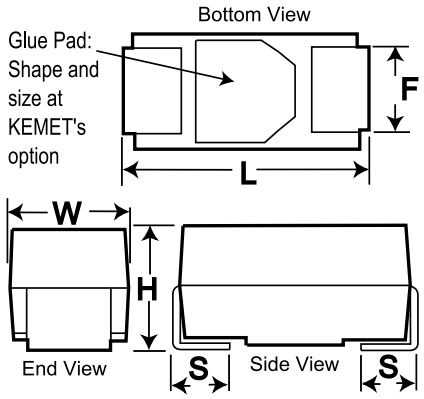

Dimensions (mm)		
Symbol	**Dimension**	**Tolerance**
L	7.3	+/-0.3
W	4.3	+/-0.3
H	4	+/-0.3
F	2.4	+/-0.1
S	1.3	+/-0.3

Notes:
-X/7343-43

General Information	
Supplier:	KEMET
Application:	125C Polymer
Part Type Description:	Surface Mount Polymer Aluminum
Termination:	Tin
Footprint:	7343
RoHS:	Yes

Specifications	
Capacitance:	180 uF
Voltage:	6.3 VDC
Tolerance:	+/-20%
Rated Temperature:	125C
Temperature Range:	-55/+125C
Leakage Current:	45.36 uA
Leakage Condition:	uAmps (5min 20C)
Dissipation Factor:	6%
Resistance/ESR:	15 mOhms (100kHz)
Current/Ripple Current:	3900 mAmps (100kHz)

Packaging Specifications	
Package Kind:	T&R
Package Size:	7 in/180 mm
Package Quantity:	500

Statements of suitability for certain applications are based on our knowledge of typical operating conditions for such applications, but are not intended to constitute - and we specifically disclaim - any warranty concerning suitability for a specific customer application or use. This Information is intended for use only by customers who have the requisite experience and capability to determine the correct products for their application. Any technical advice inferred from this Information or otherwise provided by us with reference to the use of our products is given gratis, and we assume no obligation or liability for the advice given or results obtained.

© 2006-2016 IntelliData.net