molex
one company › a world of innovation

This document was generated on 03/03/2016

PLEASE CHECK WWW.MOLEX.COM FOR LATEST PART INFORMATION

Part Number: 1200710041

Status: Active

Overview: Brad® Micro-Change® (M12) Connectors

Description: Micro-Change® (M12) Single Keyway with PG7 Cable Fitting, Straight Female, 5 Poles, Cable Diameter 3.30-6.60mm

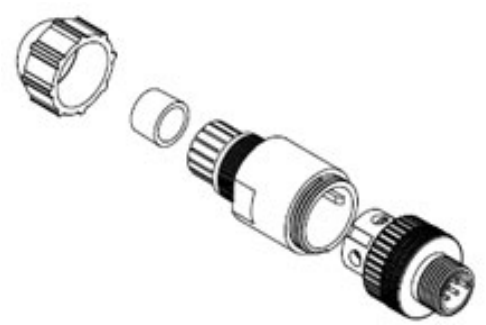

Series image - Reference only

Documents:

Drawing (PDF)

RoHS Certificate of Compliance (PDF)

Agency Certification	
CSA	LR6837
General	
Product Family	Field Attachable / Accessories
Series	120071
Approvals	cCSAus certified
IP Rating	IP67
Overview	Brad® Micro-Change® (M12) Connectors
Product Name	Micro-Change® (M12)
Type	Field Attachable Connector
UPC	78678824034
Physical	
Cable Diameter	3.30-6.60mm (.130-.260")
Coupling Type	Internal Thread
Diagnostics / LEDs	No
Diagnostics Port	No
Gender	Female
Keyway	Single
Material - Connector Body	PA
Material - Contact	Brass
Material - Coupling Nut	Nickel-plated Brass
Material - Plating Mating	Silver
Net Weight	29.300/g
Orientation	Straight
Poles	5
Temperature Range - Operating	-25°C to +90°C
Wire Size AWG	18
Electrical	
Current - Maximum per Contact	4.0A
Voltage - Maximum	30V AC / 36V DC
Material Info	
Old Part Number	8A5000-31
Reference - Drawing Numbers	
Sales Drawing	SD-120071-005

EU ELV
Not Relevant

EU RoHS
Compliant with Exemption 6(c)

China RoHS

REACH SVHC
Not Contained Per -ED/79/2015 (17 December 2015)

Halogen-Free Status
Low-Halogen

Need more information on product environmental compliance?

Email productcompliance@molex.com
Please visit the Contact Us section for any non-product compliance questions.

China ROHS	50 Image
ELV	Not Relevant

Search Parts in this Series
120071 Series

This document was generated on 03/03/2016

PLEASE CHECK WWW.MOLEX.COM FOR LATEST PART INFORMATION