This document was generated on 08/10/2016

# PLEASE CHECK WWW.MOLEX.COM FOR LATEST PART INFORMATION

**Part Number:** 0039303055

**Status:** Active

**Overview:** Mini-Fit Jr.™ Power Connectors

**Description:** Mini-Fit® Jr. Header, Single Row, Right Angle, with Snap-in Plastic Peg PCB Lock, 5 Circuits, PA Polyamide Nylon 6/6, 94V-2, Tin (Sn) Plating

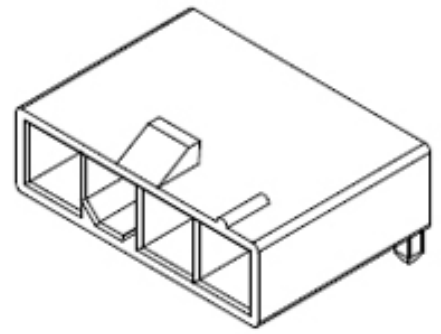

*Series image - Reference only*

**Documents:**

- 3D Model
- Drawing (PDF)
- Product Specification PS-45750-001 (PDF)
- Product Specification PS-5556-001 (PDF)
- Product Specification TS-5556-002 (PDF)
- Packaging Specification PK-5569-002 (PDF)
- RoHS Certificate of Compliance (PDF)

**Agency Certification**

| | |
|---|---|
| CSA | LR19980 |
| UL | E29179 |

**General**

| | |
|---|---|
| Product Family | PCB Headers |
| Series | 5569 |
| Application | Power, Wire-to-Board |
| Comments | Current = 13A max. per circuit when header is mated to a receptacle loaded with 45750 Mini-Fit® Plus HCS Crimp Terminal Crimped to 16 AWG wire., See Molex Product specification PS-5556-001 for additional current de-rating information. |
| Overview | Mini-Fit Jr.™ Power Connectors |
| Product Name | Mini-Fit Jr.™ |
| UPC | 800754380782 |

**Physical**

| | |
|---|---|
| Breakaway | No |
| Circuits (Loaded) | 5 |
| Circuits (maximum) | 5 |
| Color - Resin | Natural |
| Durability (mating cycles max) | 30 |
| First Mate / Last Break | No |
| Flammability | 94V-2 |
| Glow-Wire Compliant | No |
| Guide to Mating Part | No |
| Keying to Mating Part | None |
| Lock to Mating Part | Yes |
| Material - Metal | Brass |
| Material - Plating Mating | Matte Tin |
| Material - Plating Termination | Matte Tin |
| Material - Resin | Nylon |
| Net Weight | 1.833/g |
| Number of Rows | 1 |
| Orientation | Right Angle |
| PCB Locator | Yes |
| PCB Retention | Yes |
| PCB Thickness - Recommended | 1.78mm |
| Packaging Type | Bag |
| Pitch - Mating Interface | 4.20mm |
| Pitch - Termination Interface | 4.20mm |
| Plating min - Mating | 2.540µm |
| Plating min - Termination | 2.540µm |
| Polarized to Mating Part | Yes |

**EU ELV**
**Not Relevant**

**EU RoHS**
**Compliant**

**China RoHS**

**REACH SVHC**
Not Contained Per - ED/21/2016 (20 June 2016)

**Halogen-Free Status**
**Low-Halogen**

**Need more information on product environmental compliance?**

Email productcompliance@molex.com
Please visit the Contact Us section for any non-product compliance questions.

| | |
|---|---|
| China ROHS | Green Image |
| ELV | Not Relevant |

**Search Parts in this Series**
5569 Series

**Mates With**
39-01-4050 Receptacle

| | |
|---|---|
| Polarized to PCB | Yes |
| Shrouded | Fully |
| Stackable | No |
| Surface Mount Compatible (SMC) | No |
| Temperature Range - Operating | -40°C to +105°C |
| Termination Interface: Style | Through Hole |
| **Electrical** | |
| Current - Maximum per Contact | 13.0A |
| Voltage - Maximum | 600V |
| **Solder Process Data** | |
| Duration at Max. Process Temperature (seconds) | 005 |
| Lead-freeProcess Capability | WAVE |
| Max. Cycles at Max. Process Temperature | 001 |
| Process Temperature max. C | 240 |
| **Material Info** | |
| Old Part Number | 5569-05A4 |
| **Reference - Drawing Numbers** | |
| Packaging Specification | PK-5569-002 |
| Product Specification | PS-45750-001, PS-5556-001, RPS-5556-004, TS-5556-002 |
| Sales Drawing | SDA-5569-NL* |

This document was generated on 08/10/2016

**PLEASE CHECK WWW.MOLEX.COM FOR LATEST PART INFORMATION**