August 2016

UF4001 - UF4007
Fast Rectifiers

Features

- Low Forward Voltage Drop
- High Surge Current Capability
- High Reliability
- High Current Capability
- Glass-Passivated Junction

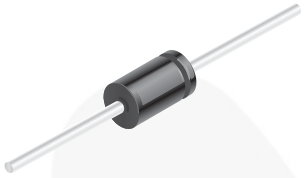

DO-41 (Plastic)
COLOR BAND DENOTES CATHODE

Ordering Information

Part Number	Top Mark	Package	Packing Method
UF4001	UF4001	DO-204AL (DO-41)	Tape and Reel
UF4002	UF4002	DO-204AL (DO-41)	Tape and Reel
UF4003	UF4003	DO-204AL (DO-41)	Tape and Reel
UF4004	UF4004	DO-204AL (DO-41)	Tape and Reel
UF4005	UF4005	DO-204AL (DO-41)	Tape and Reel
UF4006	UF4006	DO-204AL (DO-41)	Tape and Reel
UF4007	UF4007	DO-204AL (DO-41)	Tape and Reel

Absolute Maximum Ratings

Stresses exceeding the absolute maximum ratings may damage the device. The device may not function or be operable above the recommended operating conditions and stressing the parts to these levels is not recommended. In addition, extended exposure to stresses above the recommended operating conditions may affect device reliability. The absolute maximum ratings are stress ratings only. Values are at T_A = 25°C unless otherwise noted.

Symbol	Parameter	Value							Unit
		UF 4001	UF 4002	UF 4003	UF 4004	UF 4005	UF 4006	UF 4007	
V_{RRM}	Maximum Repetitive Reverse Voltage	50	100	200	400	600	800	1000	V
$I_{F(AV)}$	Average Rectified Forward Current .375 " Lead Length at T_A = 75°C	1.0							A
I_{FSM}	Non-Repetitive Peak Forward Surge Current 8.3 ms Single Half-Sine-Wave	30							A
T_{STG}	Storage Temperature Range	-65 to +150							°C
T_J	Operating Junction Temperature	-65 to +150							°C

© 1999 Fairchild Semiconductor Corporation

Thermal Characteristics

Values are at T_A = 25°C unless otherwise noted.

Symbol	Parameter	Value	Unit
P_D	Power Dissipation	2.08	W
$R_{\theta JA}$	Thermal Resistance, Junction-to-Ambient	60	°C/W
$R_{\theta JL}$	Thermal Resistance, Junction-to-Lead	30	°C/W

Electrical Characteristics

Values are at T_A = 25°C unless otherwise noted.

Symbol	Parameter	Conditions	Value							Unit
			UF 4001	UF 4002	UF 4003	UF 4004	UF 4005	UF 4006	UF 4007	
V_F	Maximum Forward Voltage	I_F = 1.0 A	1.0				1.7			V
t_{rr}	Maximum Reverse Recovery Time	I_F = 0.5 A, I_R = 1.0 A, I_{RR} = 0.25 A	50				75			ns
I_R	Maximum Reverse Current at Rated V_R	T_A = 25°C	10							μA
		T_A = 100°C	50							
C_T	Maximum Total Capacitance	V_R = 4.0 V, f = 1.0 MHz	17							pF

© 1999 Fairchild Semiconductor Corporation

Typical Performance Characteristics

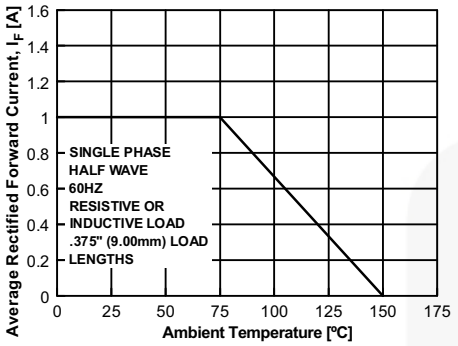

Figure 1. Forward Current Derating Curve

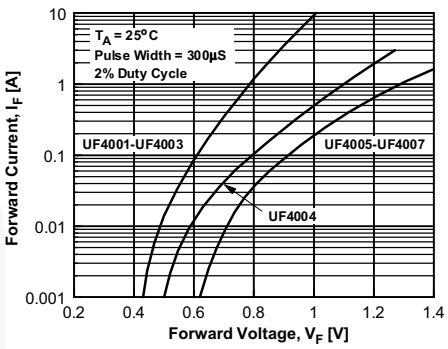

Figure 2. Forward Characteristics

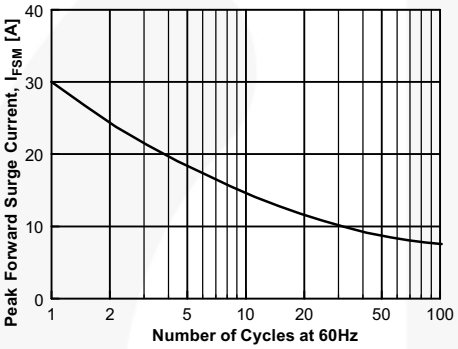

Figure 3. Non-Repetitive Surge Current

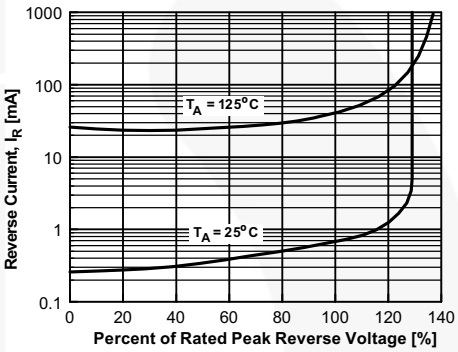

Figure 4. Reverse Characteristics

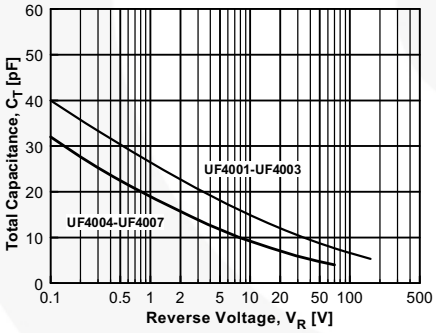

Figure 5. Typical Junction Capacitance

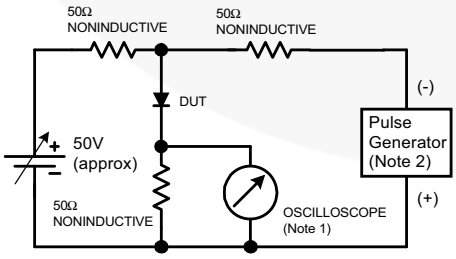

NOTES:
1. Rise time = 7.0 ns max; Input impedance = 1.0 megaohm 22 pf.
2. Rise time = 10 ns max; Source impedance = 50 ohms.

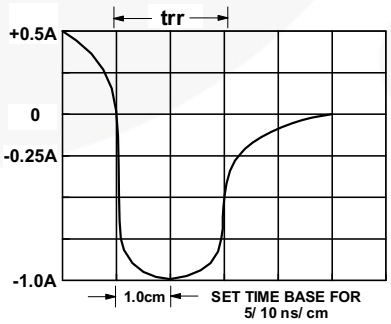

Figure 6. Reverse Recovery Time Characteristic and Test Circuit Diagram

© 1999 Fairchild Semiconductor Corporation

THIS DRAWING IS THE PROPERTY OF FAIRCHILD SEMICONDUCTOR CORPORATION. NO USE THEREOF SHALL BE MADE OTHER THAN AS A REFERENCE FOR PROPOSALS AS SUBMITTED TO FAIRCHILD SEMICONDUCTOR CORPORATION FOR JOBS TO BE EXECUTED IN CONFORMITY WITH SUCH PROPOSALS UNLESS THE CONSENT OF SAID FAIRCHILD SEMICONDUCTOR CORPORATION HAS PREVIOUSLY BEEN OBTAINED. NO PART OF THIS DRAWING SHALL BE COPIED OR DUPLICATED OR ITS CONTENTS DISCLOSED. THE INFORMATION CONTAINED ON THIS DRAWING IS CONFIDENTIAL AND PROPRIETARY.

REVISIONS

NBR	DESCRIPTION	DATE	BY/APP'D
1	RELEASED TO DCC	29JUL08	HYANG/ SUZHOU
2	CHANGE 5.20 TO 5.21. CHANGE NOTE "B" ADDED PLASTCI BODY. REMOVE "GLASS" ON TITLE.	19SEP08	HYANG/ SUZHOU

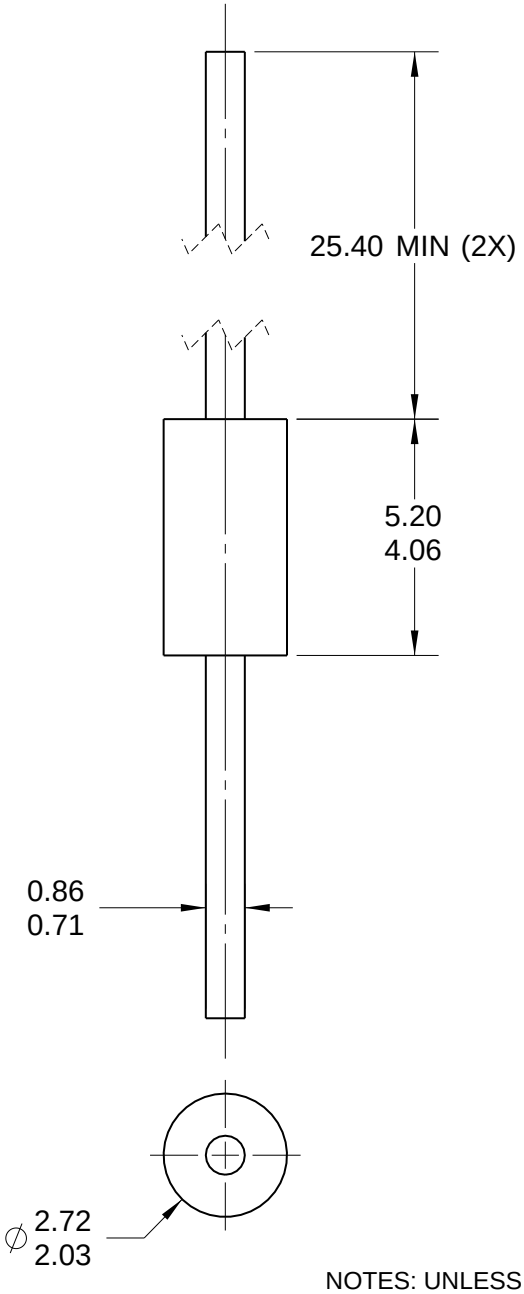

NOTES: UNLESS OTHERWISE SPECIFIED

A) PACKAGE STANDARD REFERENCE:
JEDEC DO-204 VARIATION AL.
B) PACKAGE BODY CAN BE PLASTIC OR
HERMETICALLY SEALED GLASS .
D) ALL DIMENSIONS ARE IN MILLIMETERS.
E) DRAWING FILE NAME: DO41AREV2

APPROVALS	DATE
DRAWN: BOBOY MALDO	19SEP08
CHECKED: HENRY YANG	
APPROVED: BY HUANG	
APPROVED: HOWARD ALLEN	

PROJECTION [MM] INCH

FAIRCHILD SEMICONDUCTOR™

AXIAL LEADED,
JEDEC DO204, VARIATION AL

SCALE	SIZE	DRAWING NUMBER	REV
1:1	N/A	MKT-DO41A	2

FORMERLY: N/A

SHEET : 1 OF 1

TRADEMARKS

The following includes registered and unregistered trademarks and service marks, owned by Fairchild Semiconductor and/or its global subsidiaries, and is not intended to be an exhaustive list of all such trademarks.

AccuPower™
AttitudeEngine™
Awinda®
AX-CAP®*
BitSiC™
Build it Now™
CorePLUS™
CorePOWER™
CROSSVOLT™
CTL™
Current Transfer Logic™
DEUXPEED®
Dual Cool™
EcoSPARK®
EfficientMax™
ESBC™
®
Fairchild®
Fairchild Semiconductor®
FACT Quiet Series™
FACT®
FastvCore™
FETBench™
FPS™
F-PFS™
FRFET®
Global Power Resource℠
GreenBridge™
Green FPS™
Green FPS™ e-Series™
G*max*™
GTO™
IntelliMAX™
ISOPLANAR™
Making Small Speakers Sound Louder and Better™
MegaBuck™
MICROCOUPLER™
MicroFET™
MicroPak™
MicroPak2™
MillerDrive™
MotionMax™
MotionGrid®
MTi®
MTx®
MVN®
mWSaver®
OptoHiT™
OPTOLOGIC®
OPTOPLANAR®
®
Power Supply WebDesigner™
PowerTrench®
PowerXS™
Programmable Active Droop™
QFET®
QS™
Quiet Series™
RapidConfigure™
™
Saving our world, 1mW/W/kW at a time™
SignalWise™
SmartMax™
SMART START™
Solutions for Your Success™
SPM®
STEALTH™
SuperFET®
SuperSOT™-3
SuperSOT™-6
SuperSOT™-8
SupreMOS®
SyncFET™
Sync-Lock™
SYSTEM GENERAL®*
TinyBoost®
TinyBuck®
TinyCalc™
TinyLogic®
TINYOPTO™
TinyPower™
TinyPWM™
TinyWire™
TranSiC™
TriFault Detect™
TRUECURRENT®*
µSerDes™
µSerDes™
UHC®
Ultra FRFET™
UniFET™
VCX™
VisualMax™
VoltagePlus™
XS™
Xsens™
仙童®

* Trademarks of System General Corporation, used under license by Fairchild Semiconductor.

DISCLAIMER

FAIRCHILD SEMICONDUCTOR RESERVES THE RIGHT TO MAKE CHANGES WITHOUT FURTHER NOTICE TO ANY PRODUCTS HEREIN TO IMPROVE RELIABILITY, FUNCTION, OR DESIGN. TO OBTAIN THE LATEST, MOST UP-TO-DATE DATASHEET AND PRODUCT INFORMATION, VISIT OUR WEBSITE AT HTTP://WWW.FAIRCHILDSEMI.COM. FAIRCHILD DOES NOT ASSUME ANY LIABILITY ARISING OUT OF THE APPLICATION OR USE OF ANY PRODUCT OR CIRCUIT DESCRIBED HEREIN; NEITHER DOES IT CONVEY ANY LICENSE UNDER ITS PATENT RIGHTS, NOR THE RIGHTS OF OTHERS. THESE SPECIFICATIONS DO NOT EXPAND THE TERMS OF FAIRCHILD'S WORLDWIDE TERMS AND CONDITIONS, SPECIFICALLY THE WARRANTY THEREIN, WHICH COVERS THESE PRODUCTS.

AUTHORIZED USE

Unless otherwise specified in this data sheet, this product is a standard commercial product and is not intended for use in applications that require extraordinary levels of quality and reliability. This product may not be used in the following applications, unless specifically approved in writing by a Fairchild officer: (1) automotive or other transportation, (2) military/aerospace, (3) any safety critical application – including life critical medical equipment – where the failure of the Fairchild product reasonably would be expected to result in personal injury, death or property damage. Customer's use of this product is subject to agreement of this Authorized Use policy. In the event of an unauthorized use of Fairchild's product, Fairchild accepts no liability in the event of product failure. In other respects, this product shall be subject to Fairchild's Worldwide Terms and Conditions of Sale, unless a separate agreement has been signed by both Parties.

ANTI-COUNTERFEITING POLICY

Fairchild Semiconductor Corporation's Anti-Counterfeiting Policy. Fairchild's Anti-Counterfeiting Policy is also stated on our external website, www.fairchildsemi.com, under Terms of Use

Counterfeiting of semiconductor parts is a growing problem in the industry. All manufacturers of semiconductor products are experiencing counterfeiting of their parts. Customers who inadvertently purchase counterfeit parts experience many problems such as loss of brand reputation, substandard performance, failed applications, and increased cost of production and manufacturing delays. Fairchild is taking strong measures to protect ourselves and our customers from the proliferation of counterfeit parts. Fairchild strongly encourages customers to purchase Fairchild parts either directly from Fairchild or from Authorized Fairchild Distributors who are listed by country on our web page cited above. Products customers buy either from Fairchild directly or from Authorized Fairchild Distributors are genuine parts, have full traceability, meet Fairchild's quality standards for handling and storage and provide access to Fairchild's full range of up-to-date technical and product information. Fairchild and our Authorized Distributors will stand behind all warranties and will appropriately address any warranty issues that may arise. Fairchild will not provide any warranty coverage or other assistance for parts bought from Unauthorized Sources. Fairchild is committed to combat this global problem and encourage our customers to do their part in stopping this practice by buying direct or from authorized distributors.

PRODUCT STATUS DEFINITIONS

Definition of Terms

Datasheet Identification	Product Status	Definition
Advance Information	Formative / In Design	Datasheet contains the design specifications for product development. Specifications may change in any manner without notice.
Preliminary	First Production	Datasheet contains preliminary data; supplementary data will be published at a later date. Fairchild Semiconductor reserves the right to make changes at any time without notice to improve design.
No Identification Needed	Full Production	Datasheet contains final specifications. Fairchild Semiconductor reserves the right to make changes at any time without notice to improve the design.
Obsolete	Not In Production	Datasheet contains specifications on a product that is discontinued by Fairchild Semiconductor. The datasheet is for reference information only.

Rev. I77