GP Batteries DATA SHEET

Model No.: GP100AAHC

Type	: Rechargeable Nickel Metal Hydride Cylindrical Cell
Nominal Dimension (with Sleeve)	: Φ =14.5mm H =50.5mm
Applications	: Recommended discharge current 100mA to 3000mA
Nominal Voltage	: 1.2V
Capacity	: Nominal: 1000mAh Minimum: 1000mAh Typical: 1050mAh When discharged at 200mA to 1.0V at 20℃
Charge Retention	: 80% of nominal capacity after cell storage at 20℃ for 24months When discharged at 100mA to 1.0V at 20℃
Charging Condition	: 100mA for 16hrs at 20℃
Fast Charge	: 500mA to 1000mA (0.5 to 1C) charge termination control recommended control parameters: -ΔV : 0-5mV DT/dt : 0.8℃/min (0.5 to 0.9C) 0.8 - 1℃/min (>1C) TCO : 45 - 50℃ Timer : 105% nominal input (for ref. only)
Service Life	: Up to 300 cycles (IEC standard)
Continuous Overcharge	: 100mA maximum current for 1 year. No conspicuous deformation and/or Leakage
Weight	: 20.0g
Internal Resistance	: Average25mΩ upon fully charged Max. 40mΩ at 1000Hz
Max. Charging Voltage	: 1.5V at 100mA charging
Ambient Temperature Range	: Standard Charge : 0 to 45℃ Fast Charging : 10 to 45℃ Discharge : -20 to 50℃ Storage : -20 to 30℃

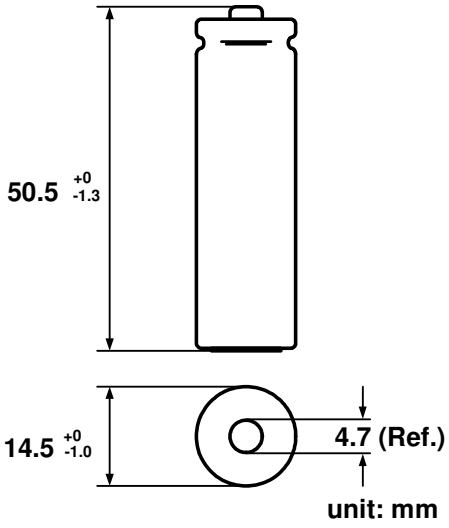

Low Rate Discharge

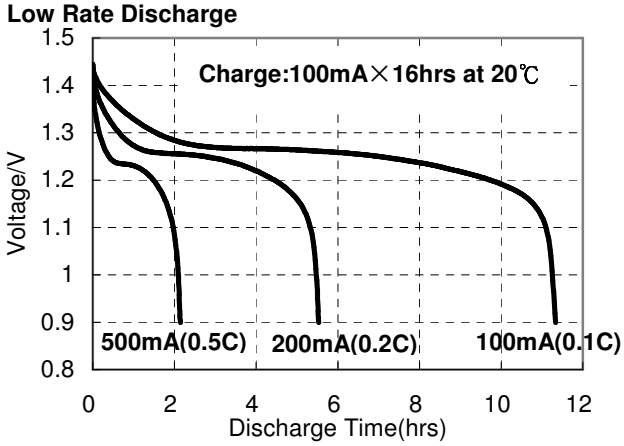

Fast Charge（Charge Control required）

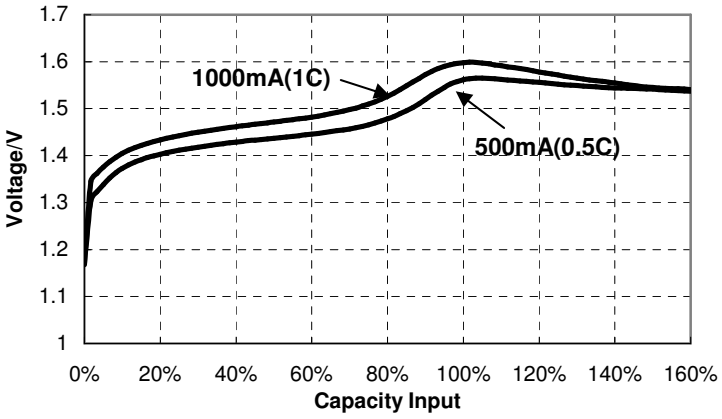

High Rate Discharge

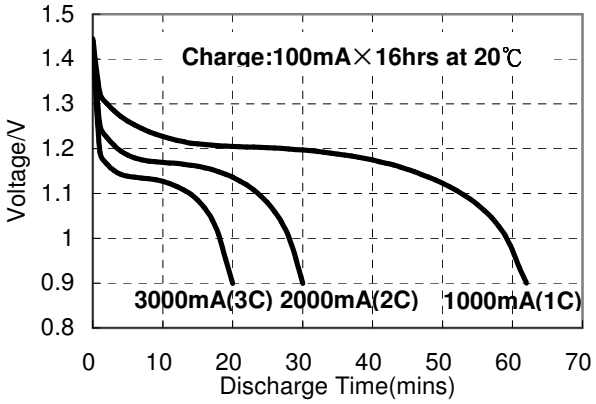

The information (subject to change without prior notice) contained in this document is for reference only and should not be used as a basis for product guarantee or warranty. For applications other than those described here, please consult your nearest GP Sales and Marketing Office or Distributors.

Manufacturer reserves the right to alter or amend the design, model and specification without prior notice.
Copyright@GPI International Ltd. – All rights reserved

Member Gold Peak Group