LAPTOP/PROJECTOR STAND
Model: PLS00318

Assembly

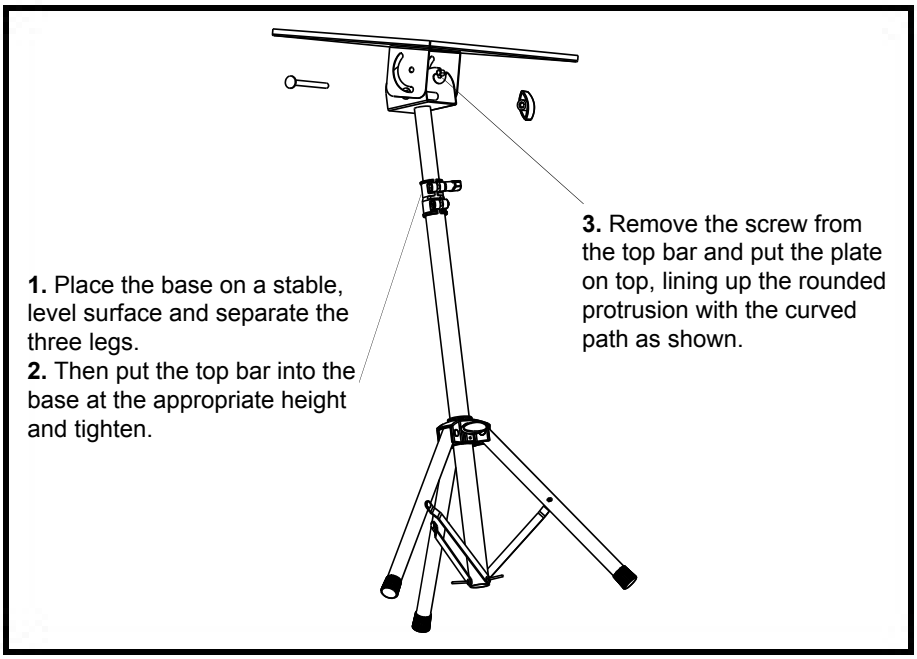

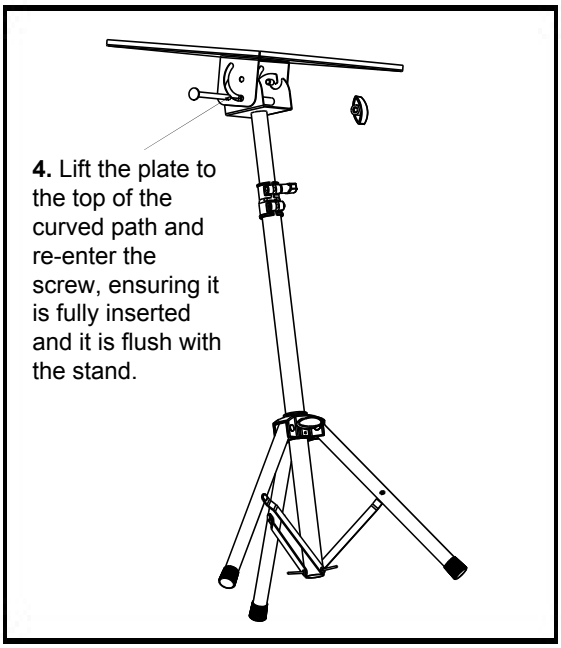

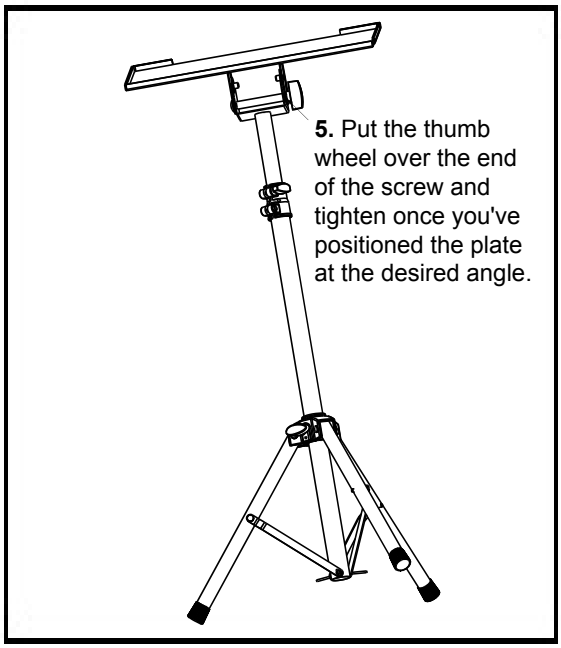

Made in China. PR2 9PP

V.1.0