Programmable, Isolated Voltage-to-Current Converter

1B22

FEATURES

Internal Isolated Loop Supply Drives 1000 Ω Load
Pin Programmable Inputs: 0 V to +5 V or 0 V to +10 V
Pin Programmable Outputs: 4 to 20 mA or 0 to 20 mA
High CMV Isolation: 1500 V RMS
Normal-Mode Output Protection: 240 V RMS
High Accuracy
- **Low Offset Tempco: ±300 nA/°C**
- **Low Gain Tempco: ±50 ppm/°C**
- **Low Nonlinearity: ±0.02%**
- **High CMR: 90 dB min**

Small Package: 1.0" × 2.10" × 0.35"
Meets IEEE STD 472: CMV Transient Protection (SWC)

APPLICATIONS

Multichannel Process Control
D/A Converter—Current Loop Interface
Analog Transmitters and Controllers
Remote Data Acquisition Systems

GENERAL DESCRIPTION

The 1B22 is an isolated voltage-to-current converter that incorporates transformer isolation to achieve high performance and automated surface mount manufacturing for low cost and increased reliability. Designed for industrial applications, it is especially suited for harsh environments with extremely high common-mode interference. With programmable inputs and outputs, the 1B22 provides an unbeatable combination of versatility and performance in a compact plastic package.

Functionally, the V/I converter consists of four basic sections: input conditioning, modulator/demodulator, isolated loop supply and current source (Figure 1). The 1B22 is pin programmable for 0 V to +5 V or 0 V to +10 V inputs and 0 to 20 mA or 4 to 20 mA outputs using an internal resistor network. It can also be set by an external resistor to accept 0 V to +1 V to 0 V to +10 V inputs. Transformer coupling provides 1500 V rms galvanic isolation between the inputs and the current loop. Nonlinearity is an excellent ±0.05% max.

Loop power is generated internally through a dc/dc converter and is also isolated from the input side (1500 V rms). Loop compliance voltage is dependent on the voltage supplied to the 1B22, and with V_{LOOP} = 28 V, it is sufficient to drive a 1000 Ω load.

The 1B22 is fully specified over –25°C to +85°C and operates over the industrial (–40°C to +85°C) temperature range.

FUNCTIONAL BLOCK DIAGRAM

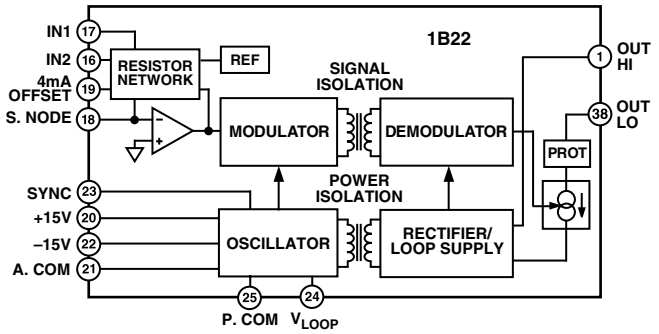

DESIGN FEATURES AND USER BENEFITS

Isolated Loop Power: Internal loop supply completely isolates the loop from the input terminals (1500 V rms) and provides the capability to drive 0 Ω to 1000 Ω loads. This eliminates the need for an external dc/dc converter.

Ease of Use: The 1B22 offers complete isolated voltage-to-current conversion with minimum external parts required to get a conditioned current signal. No external buffers or drivers are required.

High CMV Isolation: The 1B22 features high input to output galvanic isolation to eliminate ground loops and offer protection against damage from transients and fault voltages. The isolation barrier will withstand continuous CMV of 1500 V rms and meets the IEEE Standard for Common-Mode Voltage Transient Protection (STD 472-SWC).

Small Size: The 1B22 package size (1.0" × 2.1" DIP) makes it an excellent choice in multichannel systems for maximum channel density. The 0.35" height also facilitates applications with limited board clearance.

REV. B

Information furnished by Analog Devices is believed to be accurate and reliable. However, no responsibility is assumed by Analog Devices for its use, nor for any infringements of patents or other rights of third parties which may result from its use. No license is granted by implication or otherwise under any patent or patent rights of Analog Devices.

One Technology Way, P.O. Box 9106, Norwood, MA 02062-9106, U.S.A.
Tel: 781/329-4700 World Wide Web Site: http://www.analog.com
Fax: 781/326-8703
© Analog Devices, Inc., 2000

1B22* Product Page Quick Links

Last Content Update: 08/30/2016

Comparable Parts

View a parametric search of comparable parts

Documentation

Data Sheet

- 1B22: Programmable, Isolated Voltage-to-Current Converter Data Sheet

Design Resources

- 1B22 Material Declaration
- PCN-PDN Information
- Quality And Reliability
- Symbols and Footprints

Discussions

View all 1B22 EngineerZone Discussions

Sample and Buy

Visit the product page to see pricing options

Technical Support

Submit a technical question or find your regional support number

* This page was dynamically generated by Analog Devices, Inc. and inserted into this data sheet. Note: Dynamic changes to the content on this page does not constitute a change to the revision number of the product data sheet. This content may be frequently modified.

1B22–SPECIFICATIONS (typical @ +25°C and V_S = ±15 V, V_{LOOP} = +24 V, unless otherwise noted)

Model	1B22AN
INPUT SPECIFICATIONS	
Factory Calibrated, User Selectable	0 V to +5 V, 0 V to +10 V
Input Impedance	
0 V to +10 V Input Range	50 kΩ
0 V to +5 V Input Range	25 kΩ
OUTPUT SPECIFICATIONS	
Current Output Range, User Selectable	4 to 20 mA, 0 to 20 mA
Load Compliance Range, V_{LOOP} = +15 V	8 V min
V_{LOOP} = +28 V	20 V min
Maximum Output Current @ Input Overload	30 mA
Output Noise, 100 Hz Bandwidth	300 nA p-p
NONLINEARITY (% of Span)	±0.02% (±0.05% max)
ISOLATION	
CMV, Input to Output Continuous	1500 V rms max
CMR, @ 60 Hz	90 dB min
Normal-Mode Output Protection	240 V rms Continuous
CMV Transient Protection	IEEE-STD 472 (SWC)
ACCURACY	
Warm-Up Time to Rated Performance	5 min
Total Output Error @ +25°C	
Offset (V_{IN} = 0 V)	±60 µA
Span (V_{IN} = +10 V)	±0.7% Full Scale
vs. Temperature (–25°C to +85°C)	
Offset	±300 nA/°C
Span	±50 ppm/°C
DYNAMIC RESPONSE	
Settling Time to 0.1% of FS for 10 V Step	9 ms
Small Signal Bandwidth	400 Hz
POWER SUPPLY	
Bipolar Input Supplies	
Operating Voltage	±15 V ± 5%
Quiescent Current	±7.5 mA
Power Supply Rejection	±0.01%/V
Loop Supply	
Operating Voltage	+14 V to +30 V
Operating Current, at Full-Scale Output	25 mA
Loop Supply Rejection	±0.005%/V
ENVIRONMENTAL	
Temperature Range	
Rated Performance	–25°C to +85°C
Operating	–40°C to +85°C
Storage	–40°C to +85°C
Relative Humidity, Noncondensing	0 to 95% @ 60°C
CASE SIZE	1.0" × 2.1" × 0.35"

Specifications subject to change without notice.

OUTLINE DIMENSIONS

Dimensions shown in inches and (mm).

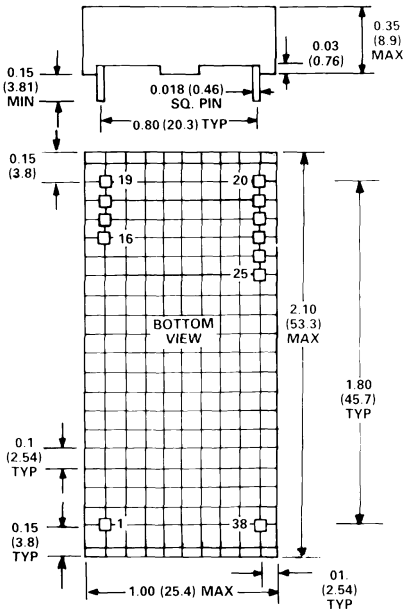

AC1225 MATING SOCKET

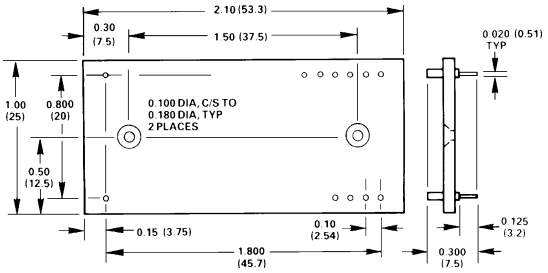

PIN DESIGNATIONS

Pin	Function
1	OUT HI
16	IN2
17	IN1
18	S. NODE
19	4 mA OFFSET
20	+15 V
21	ANA COM
22	–15 V
23	SYNC
24	V_{LOOP}
25	POWER COM
38	OUT LO

INSIDE THE 1B22

The 1B22 produces an isolated 4 to 20 mA or 0 to 20 mA output current which is proportional to the input voltage and independent of the output load resistance (Figure 1). The input stage is configured as an inverting amplifier with a resistor network to provide pin-strappable input ranges of 0 V to +5 V and 0 V to +10 V and output ranges of 0 to 20 mA and 4 to 20 mA. The conditioned signal is modulated to generate a square wave that drives transformer T1. The peak-to-peak amplitude of the signal is proportional to V_{IN}. An internal, high stability reference with a nominal output voltage of +6.4 V is used to develop a 4 mA offset for the 4 to 20 mA current loop output.

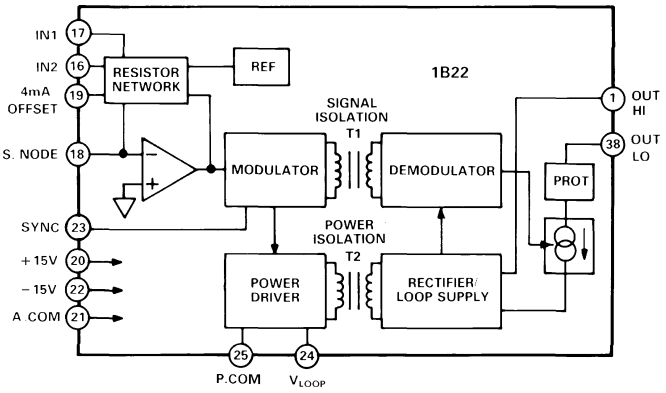

Figure 1. 1B22 Functional Block Diagram

After passing through signal transformer T1, the amplitude modulated signal is demodulated and filtered by a single pole filter. This filtered output is the control signal for the voltage-to-current converter stage. Timing information for the demodulator is derived from the power transformer T2. The 1B22 outputs are protected from accidental shorts to ac line voltages up to 240 V rms. Combined with 1500 V input to output isolation, the 1B22 provides unbeatable protection against transients, wiring errors and current loop short circuits to power lines.

The dc-dc converter consists of a power driver, power transformer T2, a full wave rectifier and a filter. The dc-dc converter provides the power for the output circuitry as well as the isolated compliance voltage for the loop. This voltage is proportional to V_{LOOP} on the input side. The 1B22 requires ±15 V supplies to power the input side circuitry and a +14 V to +30 V supply for the dc-dc converter.

USING THE 1B22

Basic Interconnections: The 1B22 may be applied to achieve rated performance as shown in Figure 2. For 0 V to 10 V signals either IN1 or IN2 can be used for input; for 0 V to +5 V signals jumper IN1 to IN2. Similarly, for 4 to 20 mA operation the 4 mA OFFSET node should be jumpered to the S. NODE, while for 0 to 20 mA it should be tied to COM. Figure 3 shows the functional diagram of the resistor network used in the 1B22.

For applications where a separate loop supply is not available, the ±15 V supplies can be used by connecting +15 V to V_{LOOP} (Pin 24) and COM to P.COM (Pin 25). For additional compliance voltage, P.COM can be connected to –15 V to drive higher loads.

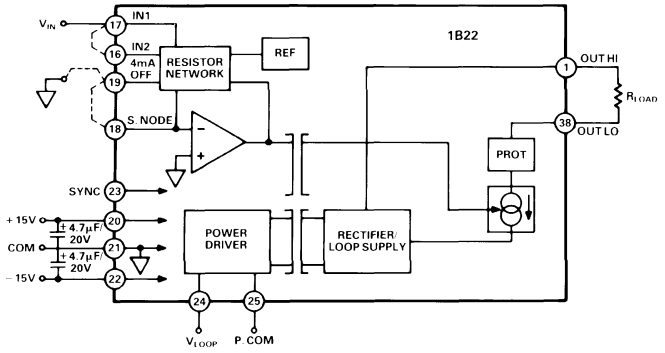

Figure 2. Basic Interconnections

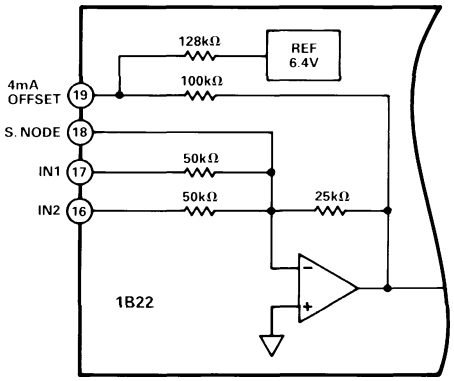

Figure 3. Internal Resistor Network

Optional Trim Adjustments: Figure 4 is an example of using potentiometers for trimming gain and offset for a 0 V to +10 V input and 4 to 20 mA output. The network for offset adjustment keeps the resistors relatively small to minimize noise effects while giving a sensitivity of ±1% of span. The value of R1 should be 5 MΩ for the 0 V to +10 V range (for 0 V to +5 V configurations, a 1.2 MΩ resistor should be used). For more adjustment range, resistors smaller than 274 kΩ can be used.

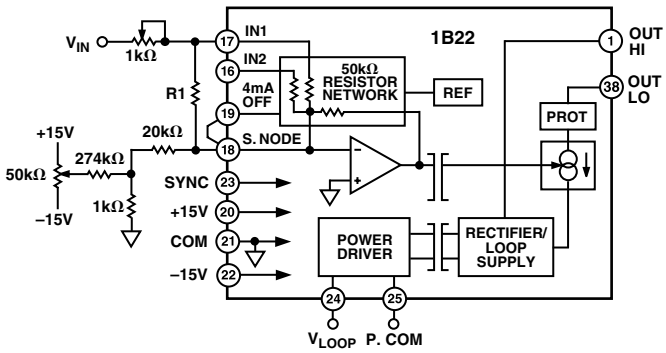

Figure 4. Optional Offset and Span Adjustment

Synchronizing Multiple 1B22s: In applications where multiple 1B22s are used in close proximity, radiated individual oscillator frequencies may cause "beat frequency" related output errors. These errors can be eliminated by driving the SYNC pins of all the units with a 40 kHz clock circuit at 50% duty cycle (Figure 5). The SYNC input typically has an input impedance of 150 kΩ‖180 pF.

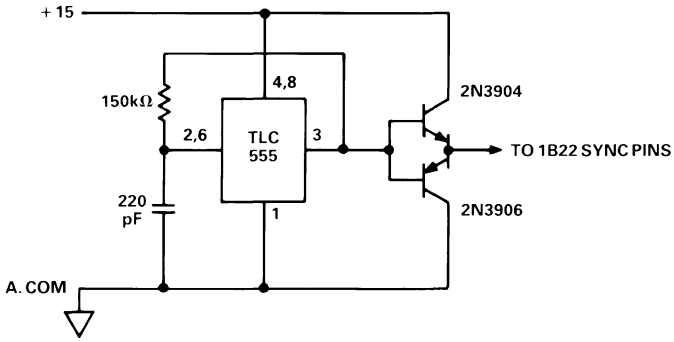

Figure 5. Multiple 1B22s' Synchronization

Loop Supply Requirements: The 1B22 design allows flexible loop supply options. The loop supply voltage required for any value of load resistance can be calculated from the following equation:

$$V_{LOOP} = \frac{2R_L + 780}{106}$$

This value allows for approximately 10% overrange capability. The graph in Figure 6 shows the relationship between supply voltage and load resistance.

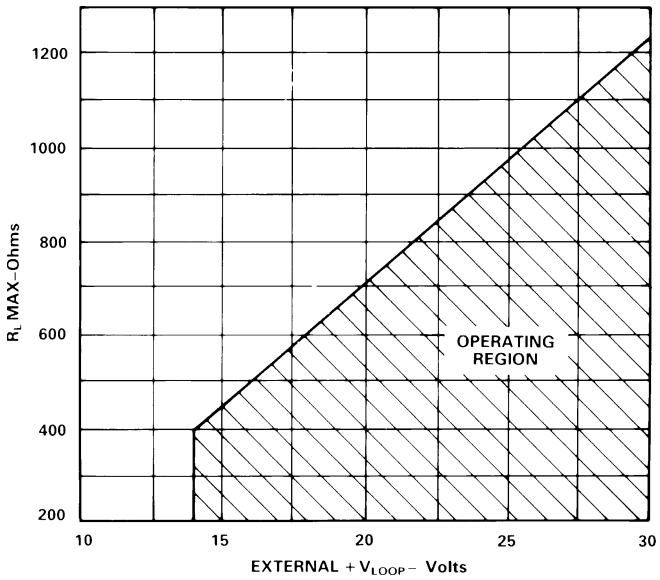

Figure 6. Loop Supply vs. Load

APPLICATIONS

Isolated D/A Converter: The 1B22 offers total ground isolation and protection from high voltage transients in interfacing D/A converters to standard 4 to 20 mA current loops. The D/A converter, such as the Analog Devices' 12-bit AD7245 DACPORT®, should be connected for operation on the unipolar 0 V to +10 V output range. This is shown in Figure 7.

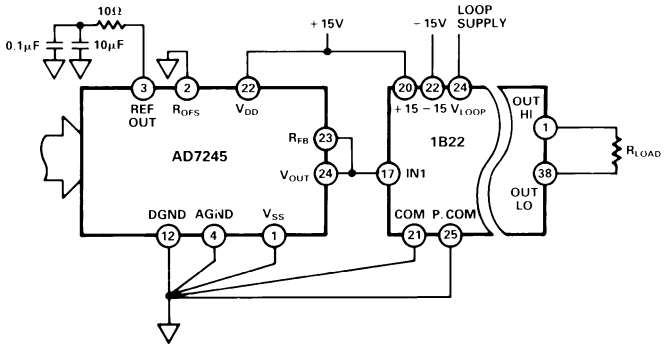

Figure 7. D/A Converter–Isolated 4-20 mA Interface

Pressure Transmitter: In Figure 8, the 1B22 is used in a pressure transmitter application to provide complete input-output isolation and avoid signal errors due to ground loop currents. The process pressure is monitored with a strain gage type pressure transducer interfaced by the Analog Devices' 1B32 transducer signal conditioner. The high level voltage output of the 1B32 is converted to the isolated 4 to 20 mA current for transmission to a remote recorder or indicator.

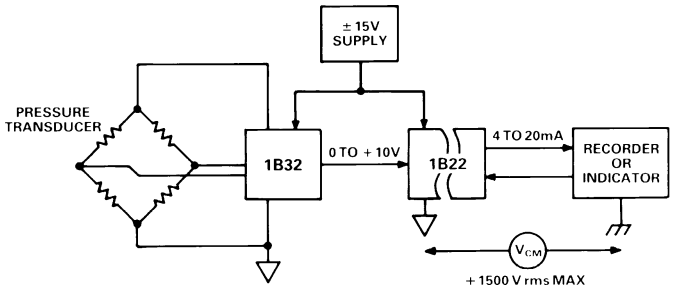

Figure 8. Isolated Pressure Transmitter

DACPORT is a registered trademark of Analog Devices, Inc.

C1193a–2.2–3/00 (rev. B)

PRINTED IN U.S.A.