Is Now Part of

ON Semiconductor®

To learn more about ON Semiconductor, please visit our website at
www.onsemi.com

ON Semiconductor and the ON Semiconductor logo are trademarks of Semiconductor Components Industries, LLC dba ON Semiconductor or its subsidiaries in the United States and/or other countries. ON Semiconductor owns the rights to a number of patents, trademarks, copyrights, trade secrets, and other intellectual property. A listing of ON Semiconductor's product/patent coverage may be accessed at www.onsemi.com/site/pdf/Patent-Marking.pdf. ON Semiconductor reserves the right to make changes without further notice to any products herein. ON Semiconductor makes no warranty, representation or guarantee regarding the suitability of its products for any particular purpose, nor does ON Semiconductor assume any liability arising out of the application or use of any product or circuit, and specifically disclaims any and all liability, including without limitation special, consequential or incidental damages. Buyer is responsible for its products and applications using ON Semiconductor products, including compliance with all laws, regulations and safety requirements or standards, regardless of any support or applications information provided by ON Semiconductor. "Typical" parameters which may be provided in ON Semiconductor data sheets and/or specifications can and do vary in different applications and actual performance may vary over time. All operating parameters, including "Typicals" must be validated for each customer application by customer's technical experts. ON Semiconductor does not convey any license under its patent rights nor the rights of others. ON Semiconductor products are not designed, intended, or authorized for use as a critical component in life support systems or any FDA Class 3 medical devices or medical devices with a same or similar classification in a foreign jurisdiction or any devices intended for implantation in the human body. Should Buyer purchase or use ON Semiconductor products for any such unintended or unauthorized application, Buyer shall indemnify and hold ON Semiconductor and its officers, employees, subsidiaries, affiliates, and distributors harmless against all claims, costs, damages, and expenses, and reasonable attorney fees arising out of, directly or indirectly, any claim of personal injury or death associated with such unintended or unauthorized use, even if such claim alleges that ON Semiconductor was negligent regarding the design or manufacture of the part. ON Semiconductor is an Equal Opportunity/Affirmative Action Employer. This literature is subject to all applicable copyright laws and is not for resale in any manner.

FAIRCHILD
SEMICONDUCTOR®

August 2008

Single-Channel: 6N135, 6N136, HCPL2503, HCPL4502
Dual-Channel: HCPL2530, HCPL2531
High Speed Transistor Optocouplers

Features

- High speed –1 MBit/s
- Superior CMR – 10kV/µs
- Dual-Channel HCPL2530/HCPL2531
- Double working voltage – 480V RMS
- CTR guaranteed 0–70°C
- U.L. recognized (File # E90700)

Applications

- Line receivers
- Pulse transformer replacement
- Output interface to CMOS-LSTTL-TTL
- Wide bandwidth analog coupling

Description

The HCPL4502, HCPL2503, 6N135, 6N136, HCPL2530 and HCPL2531 optocouplers consist of an AlGaAs LED optically coupled to a high speed photodetector transistor.

A separate connection for the bias of the photodiode improves the speed by several orders of magnitude over conventional phototransistor optocouplers by reducing the base-collector capacitance of the input transistor.

An internal noise shield provides superior common mode rejection of 10kV/µs. An improved package allows superior insulation permitting a 480V working voltage compared to industry standard of 220V.

Schematics

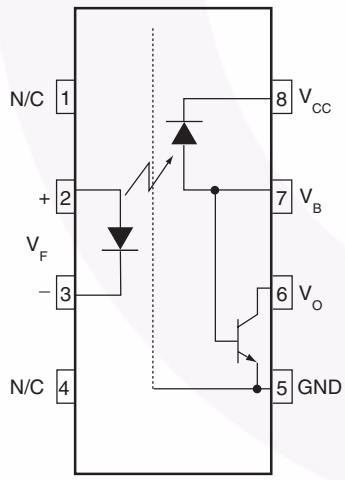

6N135, 6N136, HCPL2503, HCPL4502

Pin 7 is not connected in
Part Number HCPL4502

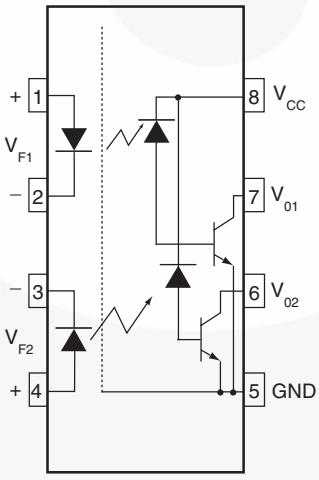

HCPL2530/HCPL2531

Package Outlines

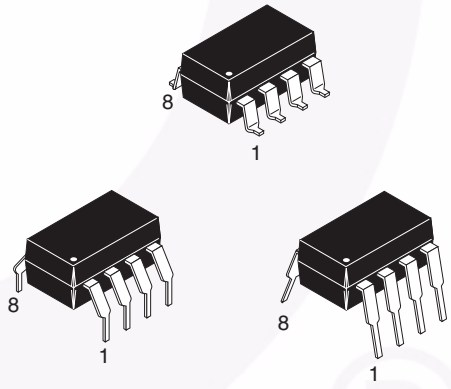

©2005 Fairchild Semiconductor Corporation

Absolute Maximum Ratings (T_A = 25°C unless otherwise specified)

Stresses exceeding the absolute maximum ratings may damage the device. The device may not function or be operable above the recommended operating conditions and stressing the parts to these levels is not recommended. In addition, extended exposure to stresses above the recommended operating conditions may affect device reliability. The absolute maximum ratings are stress ratings only.

Symbol	Parameter	Condition	Value	Units
T_{STG}	Storage Temperature		-55 to +125	°C
T_{OPR}	Operating Temperature		-55 to +100	°C
T_{SOL}	Lead Solder Temperature		260 for 10 sec	°C
EMITTER				
I_F (avg)	DC/Average Forward Input Current Each Channel[1]		25	mA
I_F (pk)	Peak Forward Input Current Each Channel[2]	50% duty cycle, 1ms P.W.	50	mA
I_F (trans)	Peak Transient Input Current Each Channel	≤1µs P.W., 300pps	1.0	A
V_R	Reverse Input Voltage Each Channel		5	V
P_D	Input Power Dissipation Each Channel	6N135/6N136 and HCPL2503/4502	100	mW
		HCPL-2530/253[3]	45	
DETECTOR				
I_O (avg)	Average Output Current Each Channel		8	mA
I_O (pk)	Peak Output Current Each Channel		16	mA
V_{EBR}	Emitter-Base Reverse Voltage	6N135, 6N136 and HCPL2503 only	5	V
V_{CC}	Supply Voltage		-0.5 to 30	V
V_O	Output Voltage		-0.5 to 20	V
I_B	Base Current	6N135, 6N136 and HCPL2503 only	5	mA
PD	Output Power Dissipation Each Channel	6N135, 6N136, HCPL2503, HCPL4502[4]	100	mW
		HCPL2530, HCPL2531	35	mW

Notes:

1. Derate linearly above 70°C free-air temperature at a rate of 0.8mA/°C.
2. Derate linearly above 70°C free-air temperature at a rate of 1.6mA/°C.
3. Derate linearly above 70°C free-air temperature at a rate of 0.9 mW/°C.
4. Derate linearly above 70°C free-air temperature at a rate of 2.0 mW/°C.

©2005 Fairchild Semiconductor Corporation

Electrical Characteristics (T_A = 0 to 70°C Unless otherwise specified)

Individual Component Characteristics

Symbol	Parameter	Test Conditions	Device	Min.	Typ.*	Max.	Unit
EMITTER							
V_F	Input Forward Voltage	I_F = 16mA, T_A =25°C			1.45	1.7	V
		I_F = 16mA				1.8	
B_{VR}	Input Reverse Breakdown Voltage	I_R = 10 µA		5.0			V
$\Delta V_F/\Delta T_A$	Temperature Coefficient of Forward Voltage	I_F = 16mA			-1.6		mV/°C
DETECTOR							
I_{OH}	Logic High Output Current	I_F = 0mA, V_O = V_{CC} = 5.5V, T_A =25°C	All		0.001	0.5	µA
		I_F = 0mA, V_O = V_{CC} = 15V, T_A =25°C	6N135 6N136 HCPL4502 HCPL2503		0.005	1	
		I_F = 0mA, V_O = V_{CC} = 15V	All			50	
I_{CCL}	Logic Low Supply Current	I_F = 16mA, V_O = Open, V_{CC} = 15V	6N135 6N136 HCPL4502 HCPL2503		120	200	µA
		I_{F1} = I_{F2} = 16mA, V_O = Open, V_{CC} = 15V	HCPL2530 HCPL2531		200	400	
I_{CCH}	Logic High Supply Current	I_F = 0mA, V_O = Open, V_{CC} = 15V, T_A =25°C	6N135 6N136 HCPL4502 HCPL2503			1	µA
		I_F = 0mA, V_O = Open, V_{CC} = 15V	6N135 6N136 HCPL4502 HCPL2503			2	
		I_F = 0mA, V_O = Open, V_{CC} = 15V	HCPL2530 HCPL2531		0.02	4	

*All Typicals at T_A = 25°C

©2005 Fairchild Semiconductor Corporation

Electrical Characteristics (Continued) (T_A = 0 to 70°C unless otherwise specified)

Transfer Characteristics

Symbol	Parameter	Test Conditions		Device	Min.	Typ.*	Max.	Unit
COUPLED								
CTR	Current Transfer Ratio[5]	I_F = 16mA, V_O = 0.4 V, V_{CC} = 4.5V, T_A =25°C		6N135 HCPL2530	7	18	50	%
				6N136 HCPL4502 HCPL2531	19	27	50	%
				HCPL2503	12	27		%
		I_F = 16mA, V_{CC} = 4.5V	V_{OL} = 0.4V	6N135	5	21		%
			V_{OL} = 0.5V	HCPL2530				
			V_{OL} = 0.4V	6N136 HCPL4502	15	30		%
			V_{OL} = 0.5V	HCPL2531				
			V_{OL} = 0.4V	HCPL2503	9	30		%
V_{OL}	Logic LOW Output Voltage	I_F = 16mA, I_O = 1.1mA, V_{CC} = 4.5V, T_A =25°C		6N135		0.18	0.4	V
				HCPL2530		0.18	0.5	
		I_F = 16mA, I_O = 3mA, V_{CC} = 4.5V, T_A =25°C		6N136 HCPL2503		0.25	0.4	
				HCPL2531		0.25	0.5	
		I_F = 16mA, I_O = 0.8mA, V_{CC} = 4.5V		6N135 HCPL2530			0.5	
		I_F = 16mA, I_O = 2.4mA, V_{CC} = 4.5V		HCPL4502 HCPL2531			0.5	

*All Typicals at T_A = 25°C

Note:

5. Current Transfer Ratio is defined as a ratio of output collector current, I_O, to the forward LED input current, I_F, times 100%.

©2005 Fairchild Semiconductor Corporation

Electrical Characteristics (Continued) (T_A = 0 to 70°C unless otherwise specified)

Switching Characteristics (V_{CC} = 5V)

Symbol	Parameter	Test Conditions	Device	Min.	Typ.*	Max.	Unit
T_{PHL}	Propagation Delay Time to Logic LOW	T_A = 25°C, R_L = 4.1kΩ, I_F = 16mA[6] (Fig. 7)	6N135 HCPL2530		0.45	1.5	µs
		R_L = 1.9kΩ, I_F = 16mA, T_A = 25°C[7] (Fig. 7)	6N136 HCPL4502 HCPL2503 HCPL2531		0.45	0.8	µs
		R_L = 4.1kΩ, I_F = 16mA[6] (Fig. 7)	6N135 HCPL2530			2.0	µs
		R_L = 1.9kΩ, I_F = 16mA[7] (Fig. 7)	6N136 HCPL4502 HCPL2503 HCPL2531			1.0	µs
T_{PLH}	Propagation Delay Time to Logic HIGH	T_A = 25°C, (R_L = 4.1kΩ, I_F = 16mA[6] (Fig. 7)	6N135 HCPL2530		0.5	1.5	µs
		R_L = 1.9kΩ, I_F = 16mA[7] (Fig. 7) T_A = 25°C	6N136 HCPL4502 HCPL2503 HCPL2531		0.3	0.8	µs
		R_L = 4.1kΩ, I_F = 16mA[6] (Fig. 7)	6N135 HCPL2530			2.0	µs
		R_L = 1.9kΩ, I_F = 16mA[7] (Fig. 7)	6N136 HCPL4502 HCPL2503 HCPL2531			1.0	µs
$\|CM_H\|$	Common Mode Transient Immunity at Logic High	I_F = 0mA, V_{CM} = 10V_{P-P}, R_L = 4.1kΩ, T_A = 25°C[8] (Fig. 8)	6N135 HCPL2530		10,000		V/µs
		I_F = 0mA, V_{CM} = 10V_{P-P}, R_L = 1.9kΩ, T_A = 25°C[8] (Fig. 8)	6N136 HCPL4502 HCPL2503 HCPL2531		10,000		V/µs
$\|CM_L\|$	Common Mode Transient Immunity at Logic Low	I_F = 16mA, V_{CM} = 10 V_{P-P}, R_L = 4.1kΩ, T_A = 25°C[8] (Fig. 8)	6N135 HCPL2530		10,000		V/µs
		I_F = 16mA, V_{CM} = 10 V_{P-P}, R_L = 1.9kΩ[8] (Fig. 8)	6N136 HCPL4502 HCPL2503 HCPL2531		10,000		V/µs

** All Typicals at T_A = 25°C

Notes:

6. The 4.1kΩ load represents 1 LSTTL unit load of 0.36mA and 6.1kΩ pull-up resistor.
7. The 1.9kΩ load represents 1 TTL unit load of 1.6mA and 5.6kΩ pull-up resistor.
8. Common mode transient immunity in logic high level is the maximum tolerable (positive) dV_{cm}/dt on the leading edge of the common mode pulse signal V_{CM}, to assure that the output will remain in a logic high state (i.e., V_O > 2.0V). Common mode transient immunity in logic low level is the maximum tolerable (negative) dV_{cm}/dt on the trailing edge of the common mode pulse signal, V_{CM}, to assure that the output will remain in a logic low state (i.e., V_O < 0.8V).

©2005 Fairchild Semiconductor Corporation

Electrical Characteristics (Continued) (T_A = 0 to 70°C unless otherwise specified)

Isolation Characteristics (T_A = 0 to 70°C Unless otherwise specified)

Symbol	Characteristics	Test Conditions	Min	Typ**	Max	Unit
I_{I-O}	Input-Output Insulation Leakage Current	Relative humidity = 45%, T_A = 25°C, t = 5s, V_{I-O} = 3000 VDC(9)			1.0	µA
V_{ISO}	Withstand Insulation Test Voltage	RH ≤ 50%, T_A = 25°C, I_{I-O} ≤ 2µA, t = 1 min.(9)	2500			V_{RMS}
R_{I-O}	Resistance (Input to Output)	V_{I-O} = 500VDC(9)		10^{12}		Ω
C_{I-O}	Capacitance (Input to Output)	f = 1MHz(9)		0.6		pF
HFE	DC Current Gain	I_O = 3mA, V_O = 5V(9)		150		
I_{I-I}	Input-Input Insulation Leakage Current	RH ≤ 45%, V_{I-I} = 500VDC(10) t = 5 s, (HCPL2530/2531 only)		0.005		µA
R_{I-I}	Input-Input Resistance	V_{I-I} = 500 VDC(10) (HCPL2530/2531 only)		10^{11}		Ω
C_{I-I}	Input-Input Capacitance	f = 1MHz)(10) (HCPL2530/2531 only)		0.03		pF

Notes:

9. Device is considered a two terminal device: Pins 1, 2, 3 and 4 are shorted together and Pins 5, 6, 7 and 8 are shorted together.
10. Measured between pins 1 and 2 shorted together, and pins 3 and 4 shorted together.

©2005 Fairchild Semiconductor Corporation

Typical Performance Curves

Fig. 1 Normalized CTR vs. Forward Current

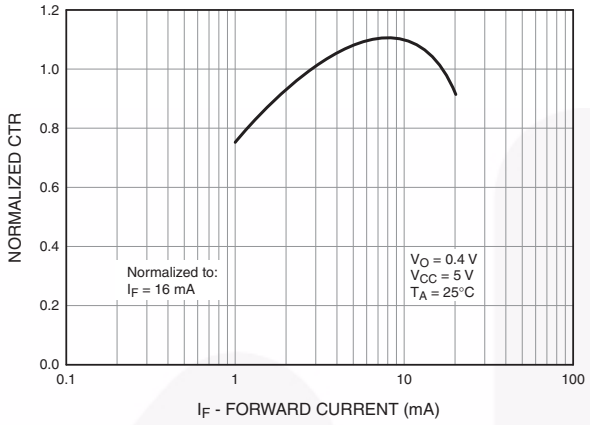

Fig. 2 Normalized CTR vs. Temperature

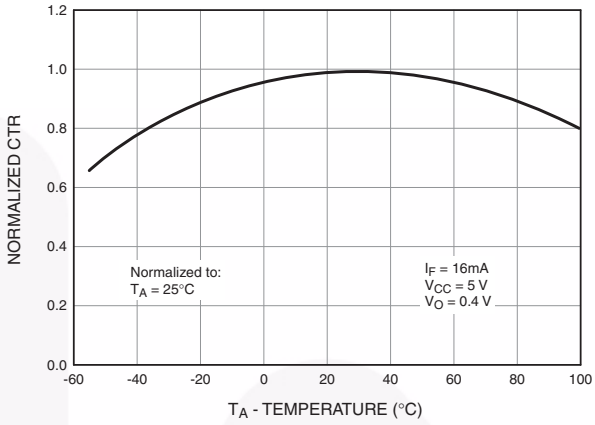

Fig. 3 Output Current vs. Output Voltage

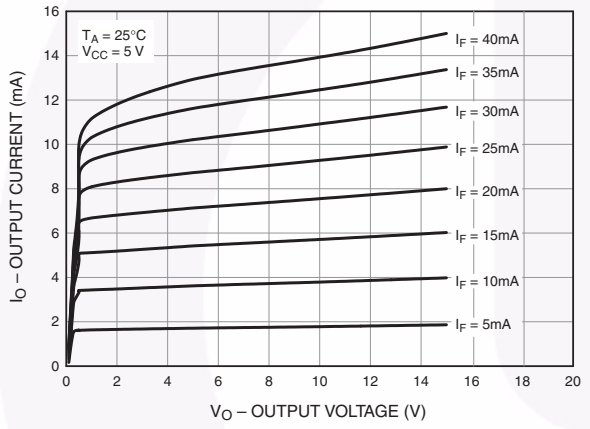

Fig. 4 Logic High Output Current vs. Temperature

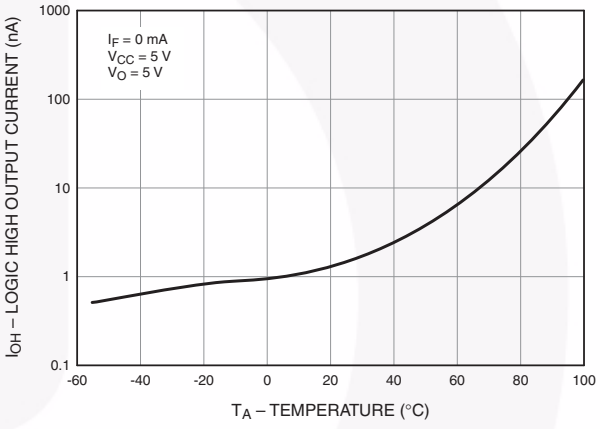

Fig. 5 Propagation Delay vs. Temperature

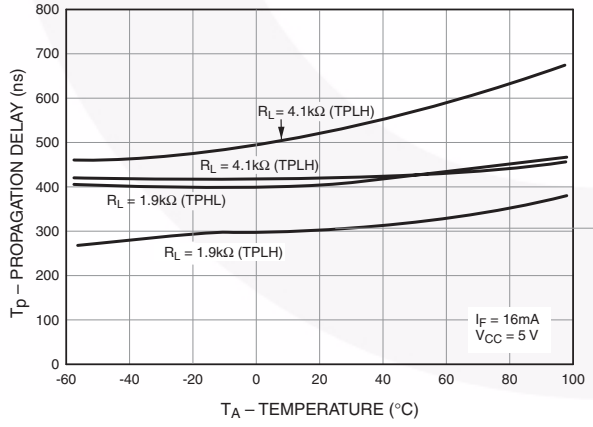

Fig. 6 Propagation Delay vs. Load Resistance

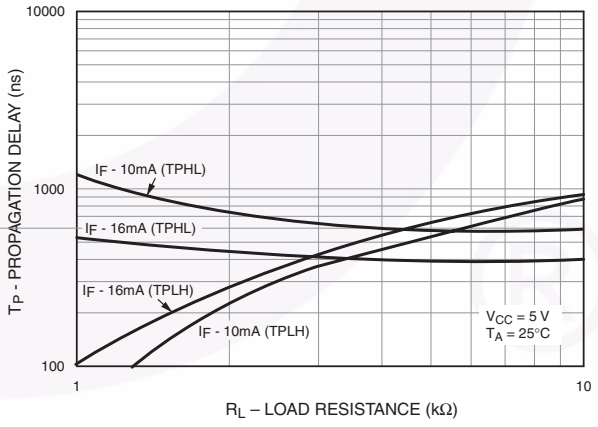

©2005 Fairchild Semiconductor Corporation

Test Circuits

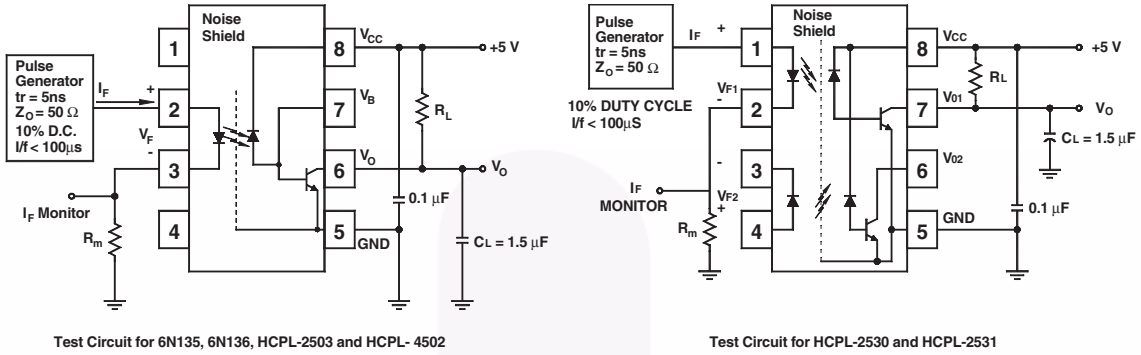

Test Circuit for 6N135, 6N136, HCPL-2503 and HCPL- 4502

Test Circuit for HCPL-2530 and HCPL-2531

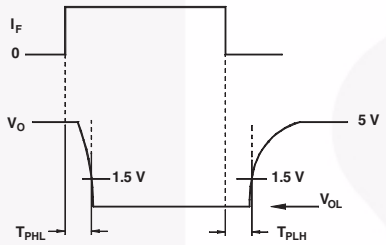

Fig. 7 Switching Time Test Circuit

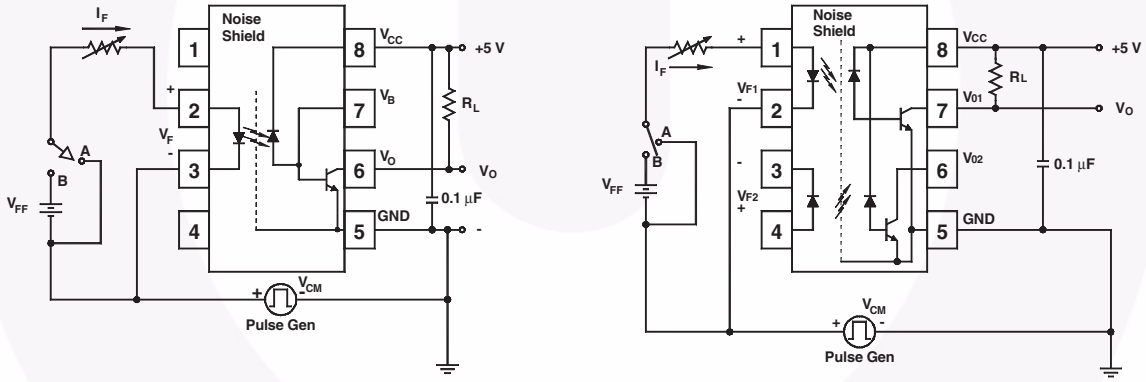

Test Circuit for 6N135, 6N136, HCPL-2503 and HCPL-4502

Test Circuit for HCPL-2530 and HCPL-2531

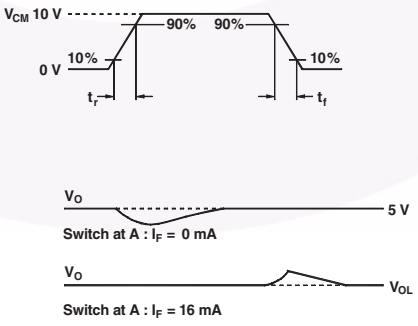

Fig. 8 Common Mode Immunity Test Circuit

Ordering Information

Option	Example Part Number	Description
S	6N135S	Surface Mount Lead Bend
SD	6N135SD	Surface Mount; Tape and reel
W	6N135W	0.4" Lead Spacing
V	6N135V	VDE0884
WV	6N135WV	VDE0884; 0.4” lead spacing
SV	6N135SV	VDE0884; surface mount
SDV	6N135SDV	VDE0884; surface mount; tape and reel

Marking Information

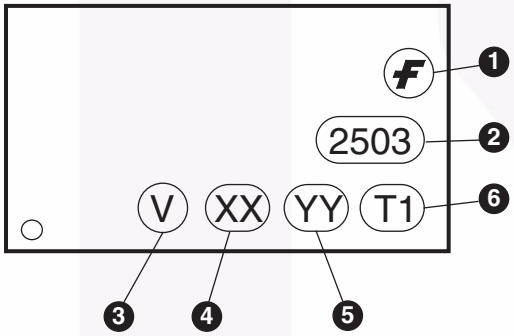

Definitions	
1	Fairchild logo
2	Device number
3	VDE mark (Note: Only appears on parts ordered with VDE option – See order entry table)
4	Two digit year code, e.g., ‘03’
5	Two digit work week ranging from ‘01’ to ‘53’
6	Assembly package code

Tape Specifications

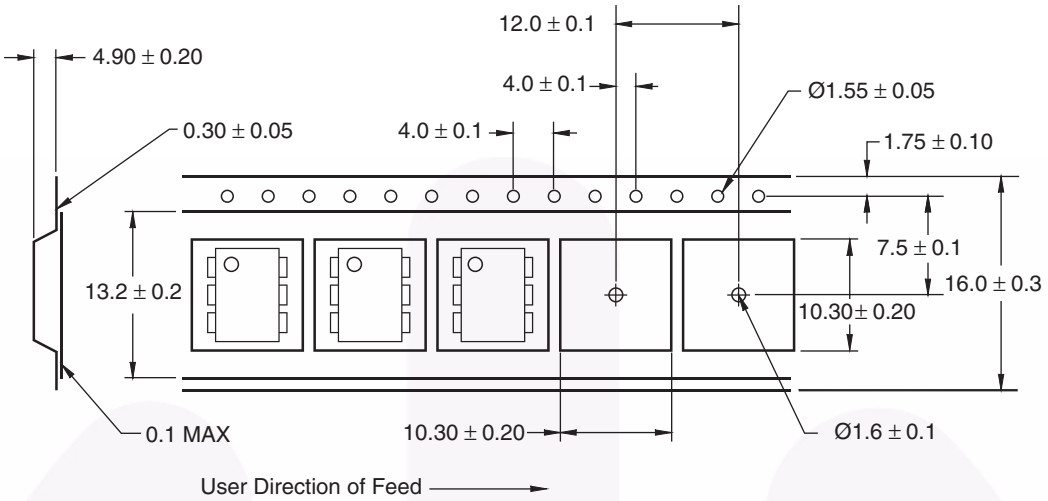

Reflow Profile

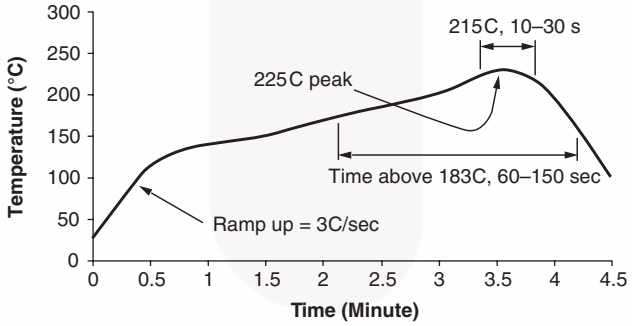

- Peak reflow temperature: 225C (package surface temperature)
- Time of temperature higher than 183C for 60–150 seconds
- One time soldering reflow is recommended

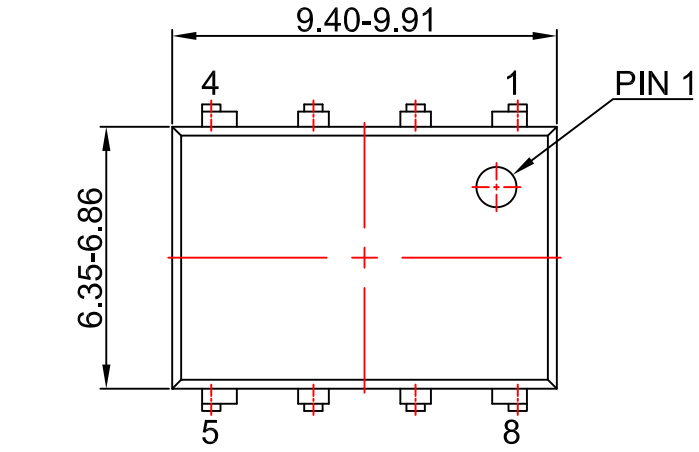

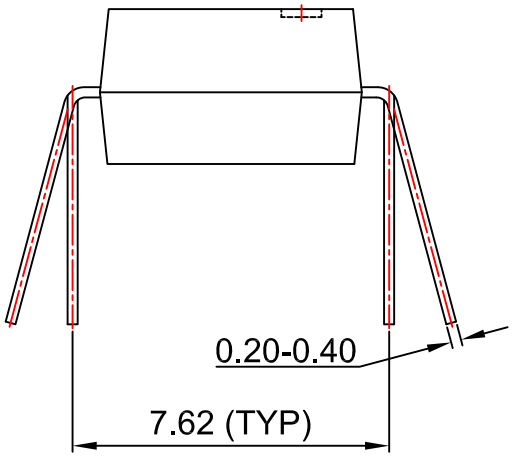

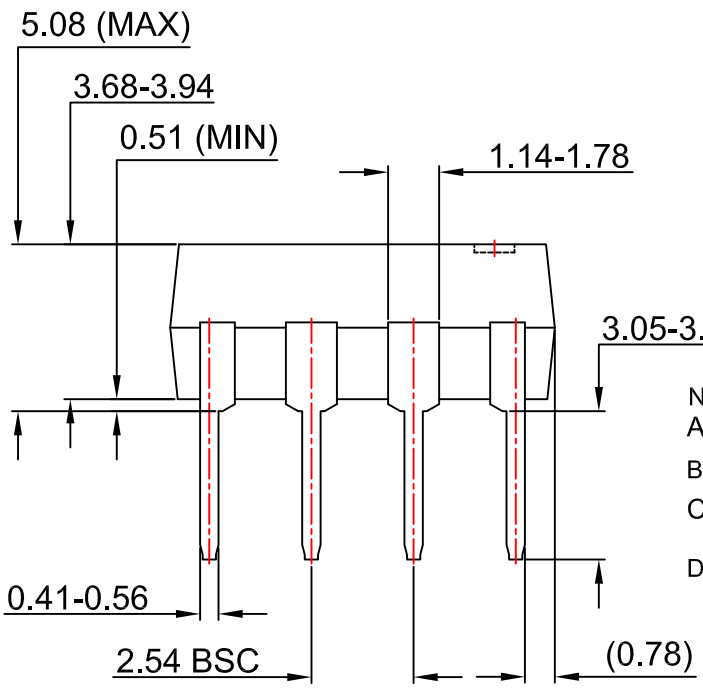

NOTES:

A) NO STANDARD APPLIES TO THIS PACKAGE

B) ALL DIMENSIONS ARE IN MILLIMETERS.

C) DIMENSIONS ARE EXCLUSIVE OF BURRS, MOLD FLASH, AND TIE BAR EXTRUSION

D) DRAWING FILENAME AND REVSION: MKT-N08GREV7

FAIRCHILD™

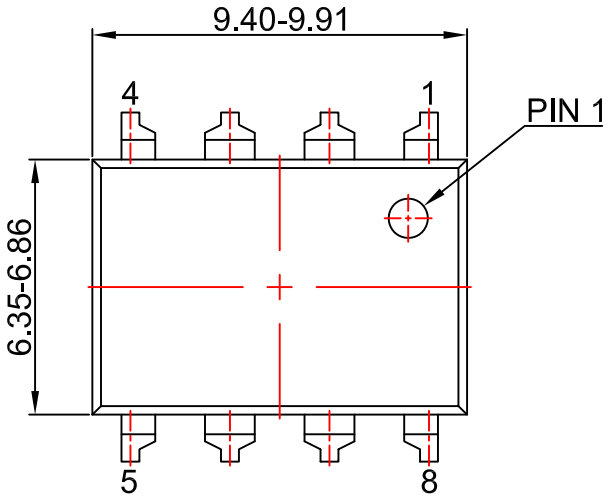

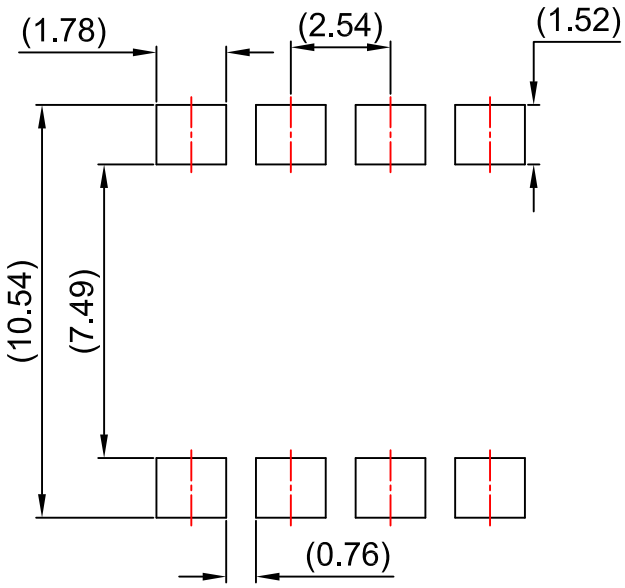

LAND PATTERN RECOMMENDATION

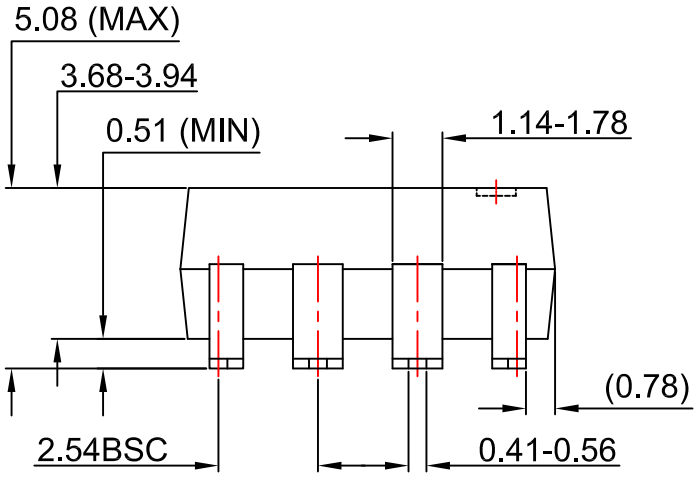

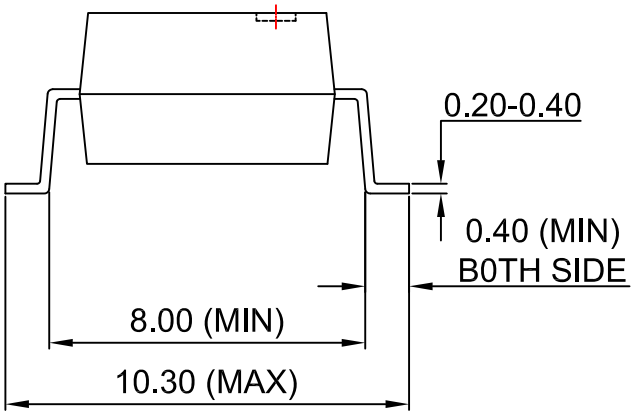

NOTES:

A) NO STANDARD APPLIES TO THIS PACKAGE

B) ALL DIMENSIONS ARE IN MILLIMETERS.

C) DIMENSIONS ARE EXCLUSIVE OF BURRS, MOLD FLASH, AND TIE BAR EXTRUSION

D) DRAWING FILENAME AND REVSION: MKT-N08Hrev7.

FAIRCHILD

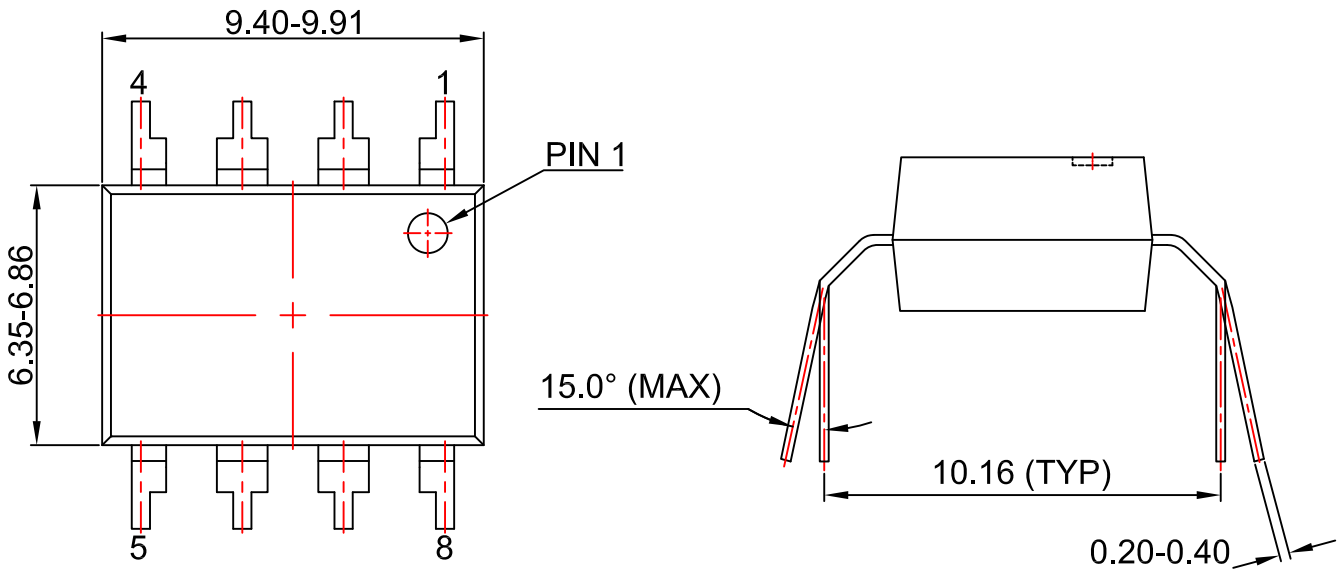

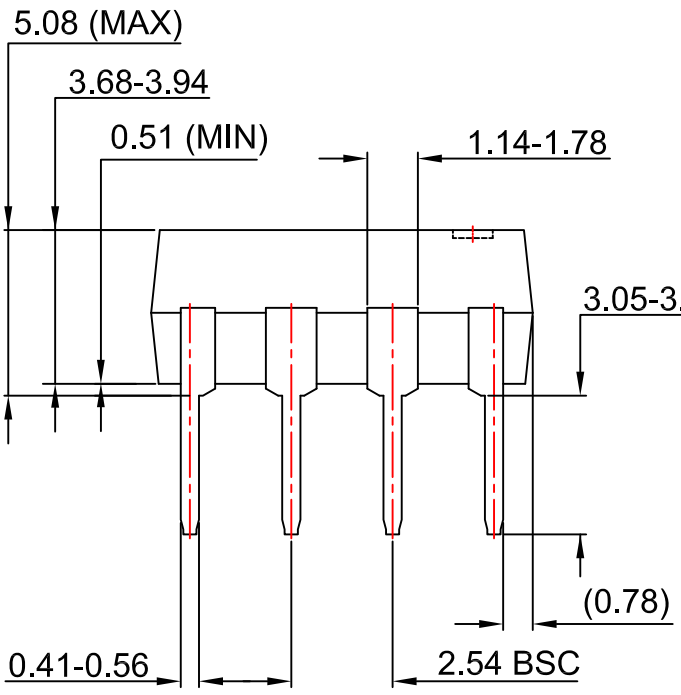

NOTES:

A) NO STANDARD APPLIES TO THIS PACKAGE

B) ALL DIMENSIONS ARE IN MILLIMETERS.

C) DIMENSIONS ARE EXCLUSIVE OF BURRS, MOLD FLASH, AND TIE BAR EXTRUSION

D) DRAWING FILENAME AND REVSION: MKT-N08REV7

FAIRCHILD™

ON Semiconductor and ON are trademarks of Semiconductor Components Industries, LLC dba ON Semiconductor or its subsidiaries in the United States and/or other countries. ON Semiconductor owns the rights to a number of patents, trademarks, copyrights, trade secrets, and other intellectual property. A listing of ON Semiconductor's product/patent coverage may be accessed at www.onsemi.com/site/pdf/Patent−Marking.pdf. ON Semiconductor reserves the right to make changes without further notice to any products herein. ON Semiconductor makes no warranty, representation or guarantee regarding the suitability of its products for any particular purpose, nor does ON Semiconductor assume any liability arising out of the application or use of any product or circuit, and specifically disclaims any and all liability, including without limitation special, consequential or incidental damages. Buyer is responsible for its products and applications using ON Semiconductor products, including compliance with all laws, regulations and safety requirements or standards, regardless of any support or applications information provided by ON Semiconductor. "Typical" parameters which may be provided in ON Semiconductor data sheets and/or specifications can and do vary in different applications and actual performance may vary over time. All operating parameters, including "Typicals" must be validated for each customer application by customer's technical experts. ON Semiconductor does not convey any license under its patent rights nor the rights of others. ON Semiconductor products are not designed, intended, or authorized for use as a critical component in life support systems or any FDA Class 3 medical devices or medical devices with a same or similar classification in a foreign jurisdiction or any devices intended for implantation in the human body. Should Buyer purchase or use ON Semiconductor products for any such unintended or unauthorized application, Buyer shall indemnify and hold ON Semiconductor and its officers, employees, subsidiaries, affiliates, and distributors harmless against all claims, costs, damages, and expenses, and reasonable attorney fees arising out of, directly or indirectly, any claim of personal injury or death associated with such unintended or unauthorized use, even if such claim alleges that ON Semiconductor was negligent regarding the design or manufacture of the part. ON Semiconductor is an Equal Opportunity/Affirmative Action Employer. This literature is subject to all applicable copyright laws and is not for resale in any manner.

PUBLICATION ORDERING INFORMATION

LITERATURE FULFILLMENT:
Literature Distribution Center for ON Semiconductor
19521 E. 32nd Pkwy, Aurora, Colorado 80011 USA
Phone: 303−675−2175 or 800−344−3860 Toll Free USA/Canada
Fax: 303−675−2176 or 800−344−3867 Toll Free USA/Canada
Email: orderlit@onsemi.com

N. American Technical Support: 800−282−9855 Toll Free USA/Canada
Europe, Middle East and Africa Technical Support:
Phone: 421 33 790 2910
Japan Customer Focus Center
Phone: 81−3−5817−1050

ON Semiconductor Website: **www.onsemi.com**

Order Literature: http://www.onsemi.com/orderlit

For additional information, please contact your local Sales Representative