Is Now Part of

ON Semiconductor®

To learn more about ON Semiconductor, please visit our website at
www.onsemi.com

ON Semiconductor and the ON Semiconductor logo are trademarks of Semiconductor Components Industries, LLC dba ON Semiconductor or its subsidiaries in the United States and/or other countries. ON Semiconductor owns the rights to a number of patents, trademarks, copyrights, trade secrets, and other intellectual property. A listing of ON Semiconductor's product/patent coverage may be accessed at www.onsemi.com/site/pdf/Patent-Marking.pdf. ON Semiconductor reserves the right to make changes without further notice to any products herein. ON Semiconductor makes no warranty, representation or guarantee regarding the suitability of its products for any particular purpose, nor does ON Semiconductor assume any liability arising out of the application or use of any product or circuit, and specifically disclaims any and all liability, including without limitation special, consequential or incidental damages. Buyer is responsible for its products and applications using ON Semiconductor products, including compliance with all laws, regulations and safety requirements or standards, regardless of any support or applications information provided by ON Semiconductor. "Typical" parameters which may be provided in ON Semiconductor data sheets and/or specifications can and do vary in different applications and actual performance may vary over time. All operating parameters, including "Typicals" must be validated for each customer application by customer's technical experts. ON Semiconductor does not convey any license under its patent rights nor the rights of others. ON Semiconductor products are not designed, intended, or authorized for use as a critical component in life support systems or any FDA Class 3 medical devices or medical devices with a same or similar classification in a foreign jurisdiction or any devices intended for implantation in the human body. Should Buyer purchase or use ON Semiconductor products for any such unintended or unauthorized application, Buyer shall indemnify and hold ON Semiconductor and its officers, employees, subsidiaries, affiliates, and distributors harmless against all claims, costs, damages, and expenses, and reasonable attorney fees arising out of, directly or indirectly, any claim of personal injury or death associated with such unintended or unauthorized use, even if such claim alleges that ON Semiconductor was negligent regarding the design or manufacture of the part. ON Semiconductor is an Equal Opportunity/Affirmative Action Employer. This literature is subject to all applicable copyright laws and is not for resale in any manner.

March 2016

FNB43060T2

Motion SPM® 45 Series

Features

- UL Certified No. E209204 (UL1557)
- 600 V - 30 A 3-Phase IGBT Inverter with Integral Gate Drivers and Protection
- Low Thermal Resistance Using Ceramic Substrate
- Low-Loss, Short-Circuit Rated IGBTs
- Built-In Bootstrap Diodes and Dedicated Vs Pins Simplify PCB Layout
- Built-In NTC Thermistor for Temperature Monitoring
- Separate Open-Emitter Pins from Low-Side IGBTs for Three-Phase Current Sensing
- Single-Grounded Power Supply
- Isolation Rating: 2000 V_{rms} / min.

Applications

- Motion Control - Home Appliance / Industrial Motor

Related Resources

- *AN-9084 - Smart Power Module, Motion SPM® 45 H V3 Series User's Guilde*
- *AN-9072 - Smart Power Module Motion SPM® in SPM45H Thermal Performance Information*
- *AN-9071 - Smart Power Module Motion SPM® in SPM45H Mounting Guidance*
- *AN-9760 - PCB Design Guidance for SPM®*

General Description

FNB43060T2 is an advanced Motion SPM® 45 module providing a fully-featured, high-performance inverter output stage for AC Induction, BLDC, and PMSM motors. These modules integrate optimized gate drive of the built-in IGBTs to minimize EMI and losses, while also providing multiple on-module protection features including under-voltage lockouts, over-current shutdown, thermal monitoring of drive IC, and fault reporting. The built-in, high-speed HVIC requires only a single supply voltage and translates the incoming logic-level gate inputs to the high-voltage, high-current drive signals required to properly drive the module's internal IGBTs. Separate negative IGBT terminals are available for each phase to support the widest variety of control algorithms.

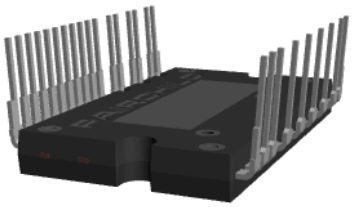

Figure 1. 3D Package Drawing (Click to Activate 3D Content)

Package Marking and Ordering Information

Device	Device Marking	Package	Packing Type	Quantity
FNB43060T2	FNB43060T2	SPMAB-C26	Rail	12

©2016 Fairchild Semiconductor Corporation

Integrated Power Functions

- 600 V - 30 A IGBT inverter for three-phase DC / AC power conversion (please refer to Figure 3)

Integrated Drive, Protection, and System Control Functions

- For inverter high-side IGBTs: gate drive circuit, high-voltage isolated high-speed level shifting
  control circuit Under-Voltage Lock-Out Protection (UVLO)
  Note: Available bootstrap circuit example is given in Figures 15.
- For inverter low-side IGBTs: gate drive circuit, Short-Circuit Protection (SCP)
  control supply circuit Under-Voltage Lock-Out Protection (UVLO)
- Fault signaling: corresponding to UVLO (low-side supply) and SC faults
- Input interface: active-HIGH interface, works with 3.3 / 5 V logic, Schmitt-trigger input

Pin Configuration

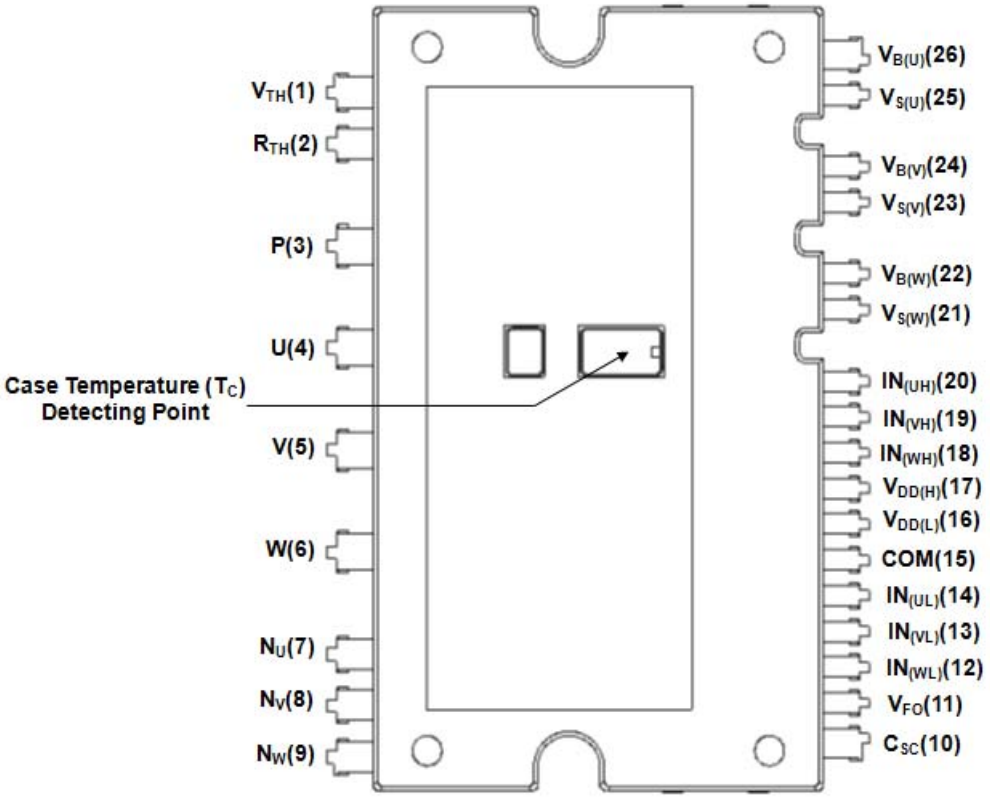

Figure 2. Top View

Pin Descriptions

Pin Number	Pin Name	Pin Description
1	V_{TH}	Thermistor Bias Voltage
2	R_{TH}	Series Resistor for the Use of Thermistor (Temperature Detection)
3	P	Positive DC-Link Input
4	U	Output for U-Phase
5	V	Output for V-Phase
6	W	Output for W-Phase
7	N_U	Negative DC-Link Input for U-Phase
8	N_V	Negative DC-Link Input for V-Phase
9	N_W	Negative DC-Link Input for W-Phase
10	C_{SC}	Shut Down Input for Short-circuit Current Detection Input
11	V_{FO}	Fault Output
12	$IN_{(WL)}$	Signal Input for Low-Side W-Phase
13	$IN_{(VL)}$	Signal Input for Low-Side V-Phase
14	$IN_{(UL)}$	Signal Input for Low-Side U-Phase
15	COM	Common Supply Ground
16	$V_{DD(L)}$	Low-Side Common Bias Voltage for IC and IGBTs Driving
17	$V_{DD(H)}$	High-Side Common Bias Voltage for IC and IGBTs Driving
18	$IN_{(WH)}$	Signal Input for High-Side W-Phase
19	$IN_{(VH)}$	Signal Input for High-Side V-Phase
20	$IN_{(UH)}$	Signal Input for High-Side U-Phase
21	$V_{S(W)}$	High-Side Bias Voltage Ground for W-Phase IGBT Driving
22	$V_{B(W)}$	High-Side Bias Voltage for W-Phase IGBT Driving
23	$V_{S(V)}$	High-Side Bias Voltage Ground for V-Phase IGBT Driving
24	$V_{B(V)}$	High-Side Bias Voltage for V-Phase IGBT Driving
25	$V_{S(U)}$	High-Side Bias Voltage Ground for U-Phase IGBT Driving
26	$V_{B(U)}$	High-Side Bias Voltage for U-Phase IGBT Driving

©2016 Fairchild Semiconductor Corporation

Internal Equivalent Circuit and Input/Output Pins

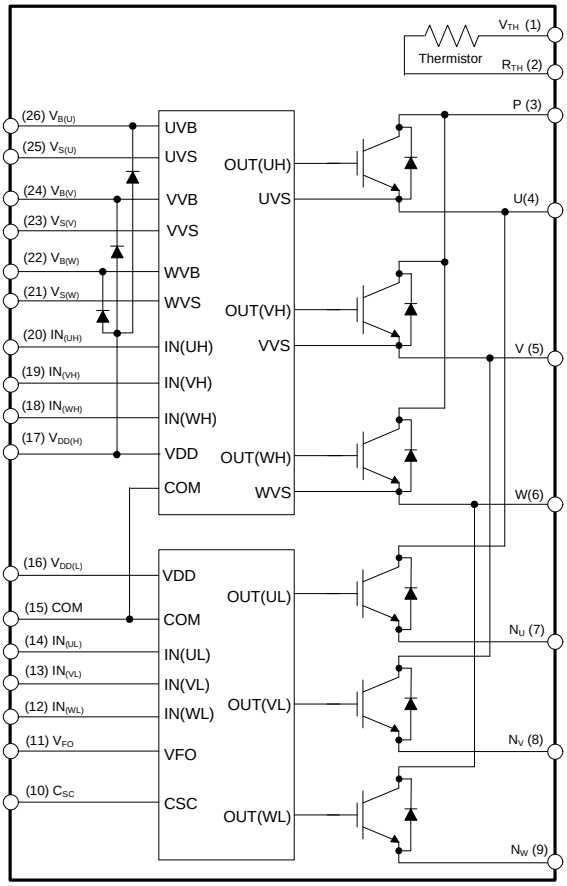

Figure 3. Internal Block Diagram

Note:

1. Inverter high-side is composed of three IGBTs, freewheeling diodes, and one control IC for each IGBT.
2. Inverter low-side is composed of three IGBTs, freewheeling diodes, and one control IC for each IGBT. It has gate drive and protection functions.
3. Inverter power side is composed of four inverter DC-link input terminals and three inverter output terminals.

Absolute Maximum Ratings (T_J = 25°C, unless otherwise specified.)

Inverter Part

Symbol	Parameter	Conditions	Rating	Unit
V_{PN}	Supply Voltage	Applied between P - N_U, N_V, N_W	450	V
$V_{PN(Surge)}$	Supply Voltage (Surge)	Applied between P - N_U, N_V, N_W	500	V
V_{CES}	Collector - Emitter Voltage		600	V
± I_C	Each IGBT Collector Current	T_C = 25°C, T_J < 150°C	30	A
± I_{CP}	Each IGBT Collector Current (Peak)	T_C = 25°C, T_J < 150°C, Under 1 ms Pulse Width (Note 4)	60	A
P_C	Collector Dissipation	T_C = 25°C per One Chip (Note 4)	59	W
T_J	Operating Junction Temperature		- 40 ~ 150	°C

Control Part

Symbol	Parameter	Conditions	Rating	Unit
V_{DD}	Control Supply Voltage	Applied between $V_{DD(H)}$, $V_{DD(L)}$ - COM	20	V
V_{BS}	High - Side Control Bias Voltage	Applied between $V_{B(U)}$ - $V_{S(U)}$, $V_{B(V)}$ - $V_{S(V)}$, $V_{B(W)}$ - $V_{S(W)}$	20	V
V_{IN}	Input Signal Voltage	Applied between $IN_{(UH)}$, $IN_{(VH)}$, $IN_{(WH)}$, $IN_{(UL)}$, $IN_{(VL)}$, $IN_{(WL)}$ - COM	-0.3 ~ V_{DD} + 0.3	V
V_{FO}	Fault Output Supply Voltage	Applied between V_{FO} - COM	-0.3 ~ V_{DD} + 0.3	V
I_{FO}	Fault Output Current	Sink Current at V_{FO} pin	1	mA
V_{SC}	Current-Sensing Input Voltage	Applied between C_{SC} - COM	-0.3 ~ V_{DD}+ 0.3	V

Bootstrap Diode Part

Symbol	Parameter	Conditions	Rating	Unit
V_{RRM}	Maximum Repetitive Reverse Voltage		600	V
I_F	Forward Current	T_C = 25°C, T_J < 150°C	0.5	A
I_{FP}	Forward Current (Peak)	T_C = 25°C, T_J < 150°C, Under 1 ms Pulse Width (Note 4)	2.0	A
T_J	Operating Junction Temperature		-40 ~ 150	°C

Total System

Symbol	Parameter	Conditions	Rating	Unit
$V_{PN(PROT)}$	Self-Protection Supply Voltage Limit (Short-Circuit Protection Capability)	V_{DD} = V_{BS} = 13.5 ~ 16.5 V T_J = 150°C, Non-Repetitive, < 2 μs	400	V
T_C	Module Case Operation Temperature	*See Figure 2*	-40 ~ 125	°C
T_{STG}	Storage Temperature		-40 ~ 125	°C
V_{ISO}	Isolation Voltage	60 Hz, Sinusoidal, AC 1 Minute, Connect Pins to Heat Sink Plate	2000	V_{rms}

Thermal Resistance

Symbol	Parameter	Conditions	Min.	Typ.	Max.	Unit
$R_{th(j-c)Q}$	Junction to Case Thermal Resistance (Note 5)	Inverter IGBT Part (per 1 / 6 module)	-	-	2.1	°C / W
$R_{th(j-c)F}$		Inverter FWDi Part (per 1 / 6 module)	-	-	2.8	°C / W

Note:

4. These values had been made an acquisition by the calculation considered to design factor.

5. For the measurement point of case temperature (T_C), *please refer to Figure 2.*

Electrical Characteristics (T_J = 25°C, unless otherwise specified.)

Inverter Part

Symbol		Parameter	Conditions		Min.	Typ.	Max.	Unit
$V_{CE(SAT)}$		Collector - Emitter Saturation Voltage	$V_{DD} = V_{BS}$ = 15 V V_{IN} = 5 V	I_C = 30 A, T_J = 25°C	-	1.65	2.25	V
V_F		FWDi Forward Voltage	V_{IN} = 0 V	I_F = 30 A, T_J = 25°C	-	2.00	2.60	V
HS	t_{ON}	Switching Times	V_{PN} = 300 V, $V_{DD} = V_{BS}$ = 15 V, I_C = 30 A T_J = 25°C V_{IN} = 0 V ↔ 5 V, Inductive Load (Note 6)		0.45	0.85	1.35	µs
	$t_{C(ON)}$				-	0.20	0.50	µs
	t_{OFF}				-	0.70	1.20	µs
	$t_{C(OFF)}$				-	0.15	0.45	µs
	t_{rr}				-	0.10	-	µs
LS	t_{ON}		V_{PN} = 300 V, $V_{DD} = V_{BS}$ = 15 V, I_C = 30 A T_J = 25°C V_{IN} = 0 V ↔ 5 V, Inductive Load (Note 6)		0.5	0.90	1.40	µs
	$t_{C(ON)}$				-	0.30	0.60	µs
	t_{OFF}				-	0.80	1.30	µs
	$t_{C(OFF)}$				-	0.15	0.45	µs
	t_{rr}				-	0.15	-	µs
I_{CES}		Collector - Emitter Leakage Current	$V_{CE} = V_{CES}$		-	-	1	mA

Note:

6. t_{ON} and t_{OFF} include the propagation delay time of the internal drive IC. $t_{C(ON)}$ and $t_{C(OFF)}$ are the switching time of IGBT itself under the given gate driving condition internally. For the detailed information, *please see Figure 4*.

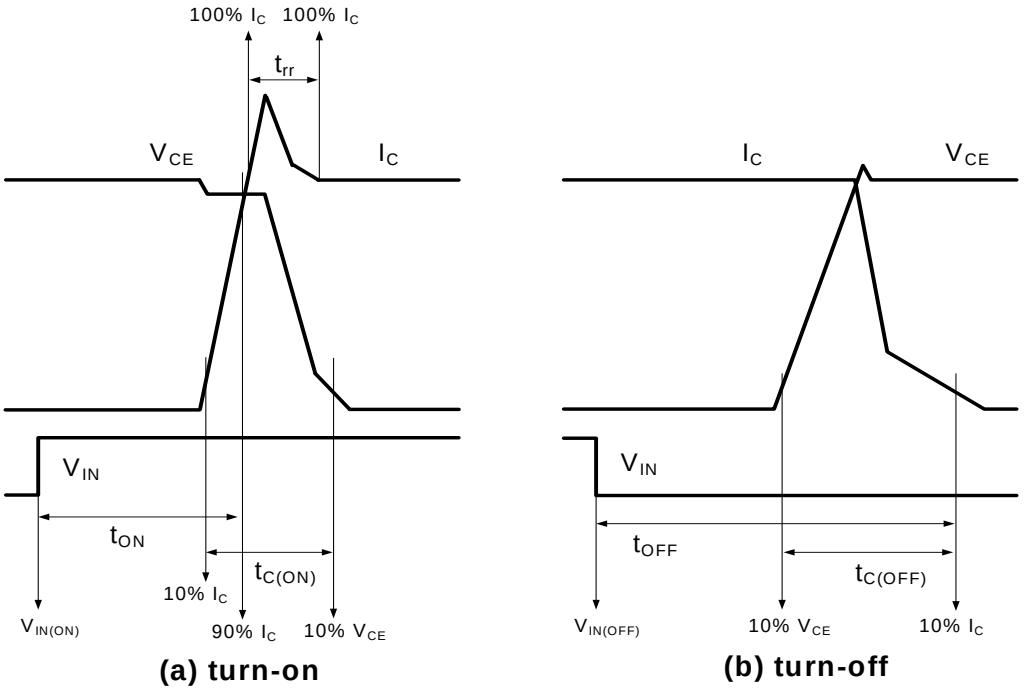

Figure 4. Switching Time Definition

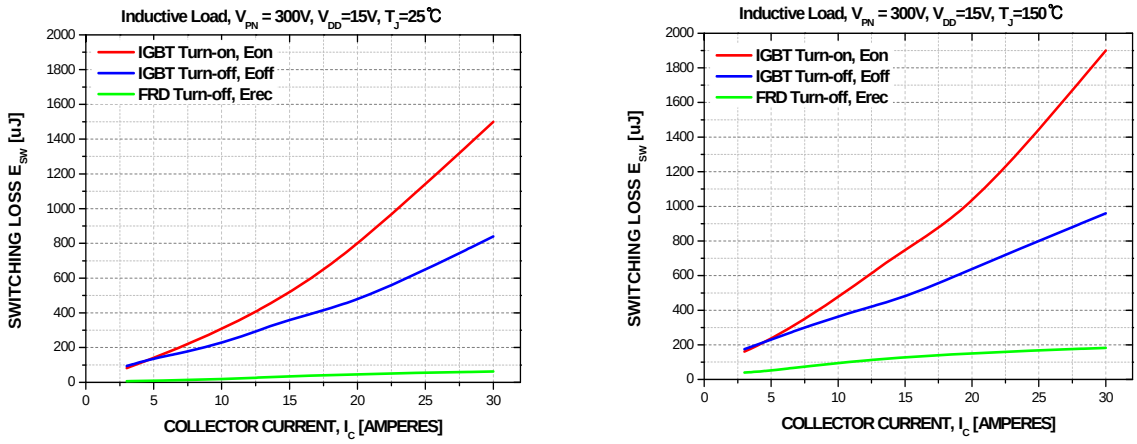

Figure 5. Switching Loss Characteristics (Typical)

Control Part

Symbol	Parameter	Conditions		Min.	Typ.	Max.	Unit
I_{QDDH}	Quiescent V_{DD} Supply Current	$V_{DD(H)}$ = 15 V, $IN_{(UH,VH,WH)}$ = 0 V	$V_{DD(H)}$ - COM	-	-	0.10	mA
I_{QDDL}		$V_{DD(L)}$ = 15 V, $IN_{(UL,VL,WL)}$ = 0 V	$V_{DD(L)}$ - COM	-	-	2.65	mA
I_{PDDH}	Operating V_{DD} Supply Current	$V_{DD(H)}$ = 15 V, f_{PWM} = 20 kHz, duty = 50%, Applied to One PWM Signal Input for High-Side	$V_{DD(H)}$ - COM	-	-	0.15	mA
I_{PDDL}		$V_{DD(L)}$ = 15 V, f_{PWM} = 20 kHz, duty = 50%, Applied to One PWM Signal Input for Low-Side	$V_{DD(L)}$ - COM	-	-	4.00	mA
I_{QBS}	Quiescent V_{BS} Supply Current	V_{BS} = 15 V, $IN_{(UH,VH,WH)}$ = 0 V	$V_{B(U)}$ - $V_{S(U)}$, $V_{B(V)}$ - $V_{S(V)}$, $V_{B(W)}$ - $V_{S(W)}$	-	-	0.30	mA
I_{PBS}	Operating V_{BS} Supply Current	V_{DD} = V_{BS} = 15 V, f_{PWM} = 20 kHz, Duty = 50%, Applied to One PWM Signal Input for High-Side	$V_{B(U)}$ - $V_{S(U)}$, $V_{B(V)}$ - $V_{S(V)}$, $V_{B(W)}$ - $V_{S(W)}$	-	-	2.00	mA
V_{FOH}	Fault Output Voltage	V_{SC} = 0 V, V_{FO} Circuit: 4.7 kΩ to 5 V Pull-up		4.5	-	-	V
V_{FOL}		V_{SC} = 1 V, V_{FO} Circuit: 4.7 kΩ to 5 V Pull-up		-	-	0.5	V
$V_{SC(ref)}$	Short Circuit Trip Level	V_{DD} = 15 V (Note 7)	C_{SC} - COM	0.45	0.50	0.55	V
UV_{DDD}	Supply Circuit Under-Voltage Protection	Detection level		10.5	-	13.0	V
UV_{DDR}		Reset level		11.0	-	13.5	V
UV_{BSD}		Detection level		10.0	-	12.5	V
UV_{BSR}		Reset level		10.5	-	13.0	V
t_{FOD}	Fault-Out Pulse Width			30	-	-	µs
$V_{IN(ON)}$	ON Threshold Voltage	Applied between $IN_{(UH,VH,WH)}$ - COM, $IN_{(UL,VL,WL)}$ - COM		-	-	2.6	V
$V_{IN(OFF)}$	OFF Threshold Voltage			0.8	-	-	V
R_{TH}	Resistance of Thermistor	@T_{TH} = 25°C, (Note 8)		-	47	-	kΩ
		@T_{TH} = 100°C		-	2.9	-	kΩ

Note:

7. Short-circuit current protection is functioning only at the low-sides.

8. T_{TH} is the temperature of thermistor itselt. To know case temperature (T_C), please make the experiment considering your application.

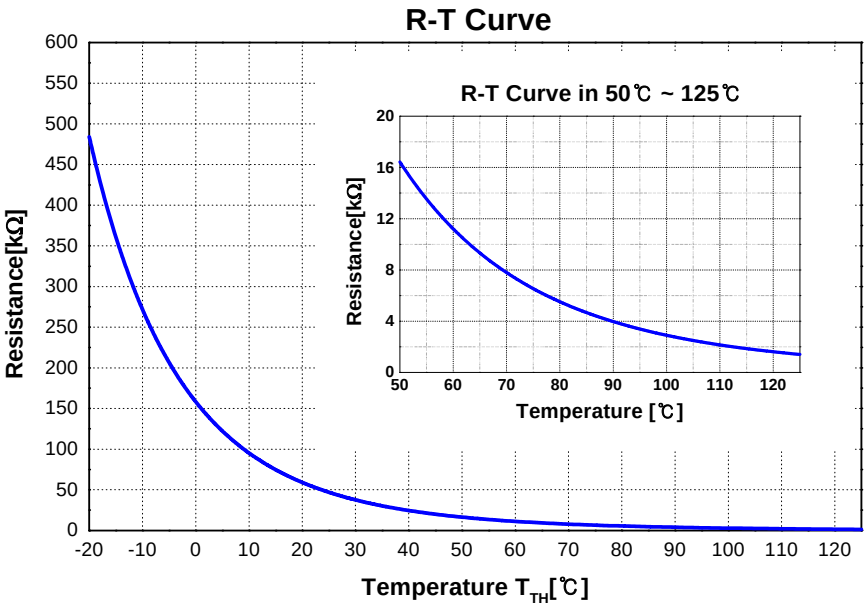

Figure. 6. R-T Curve of The Built-In Thermistor

Bootstrap Diode Part

Symbol	Parameter	Conditions	Min.	Typ.	Max.	Unit
V_F	Forward Voltage	I_F = 0.1 A, T_C = 25°C	-	2.5	-	V
t_{rr}	Reverse-Recovery Time	I_F = 0.1 A, dI_F / dt = 50 A / μs, T_J = 25°C	-	80	-	ns

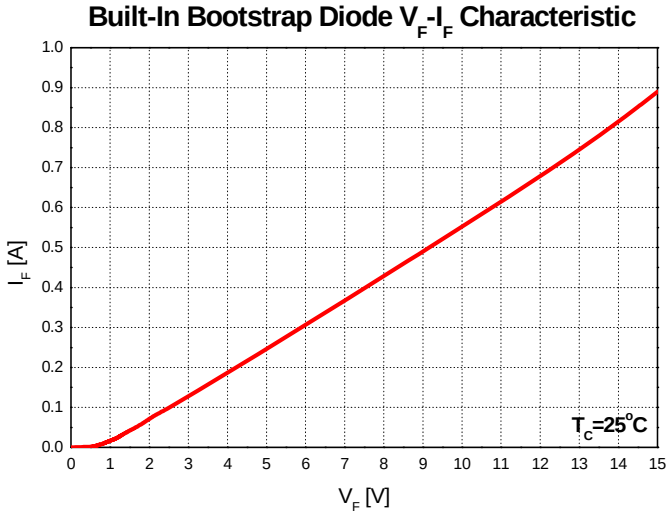

Figure 7. Built-In Bootstrap Diode Characteristic

Note:

9. Built-in bootstrap diode includes around 15 Ω resistance characteristic.

Recommended Operating Conditions

Symbol	Parameter	Conditions	Min.	Typ.	Max.	Unit
V_{PN}	Supply Voltage	Applied between P - N_U, N_V, N_W	-	300	400	V
V_{DD}	Control Supply Voltage	Applied between $V_{DD(H)}$, $V_{DD(L)}$ - COM	13.5	15.0	16.5	V
V_{BS}	High-Side Bias Voltage	Applied between $V_{B(U)}$ - $V_{S(U)}$, $V_{B(V)}$ - $V_{S(V)}$, $V_{B(W)}$ - $V_{S(W)}$	13.0	15.0	18.5	V
dV_{DD} / dt, dV_{BS} / dt	Control Supply Variation		-1	-	1	V / µs
t_{dead}	Blanking Time for Preventing Arm-Short	For each input signal	1.0	-	-	µs
f_{PWM}	PWM Input Signal	-40°C ≤ T_C ≤ 125°C, -40°C ≤ T_J ≤ 150°C	-	-	20	kHz
V_{SEN}	Voltage for Current Sensing	Applied between N_U, N_V, N_W - COM (Including Surge-Voltage)	-4		4	V
$P_{WIN(ON)}$	Minimum Input Pulse Width	V_{DD} = V_{BS} = 15 V, I_C ≤ 60 A, Wiring Inductance between $N_{U, V, W}$ and DC Link N < 10nH (Note 10)	1.2	-	-	µs
$P_{WIN(OFF)}$			1.2	-	-	
T_J	Junction Temperature		- 40	-	150	°C

Note:

10. This product might not make response if input pulse width is less than the recommanded value.

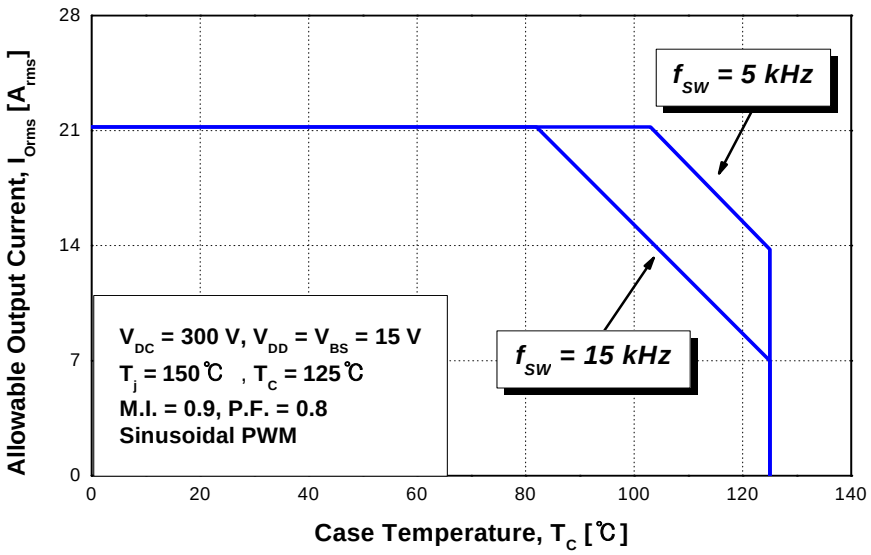

Figure 8. Allowable Maximum Output Current

Note:

11. This allowable output current value is the reference data for the safe operation of this product. This may be different from the actual application and operating condition.

Mechanical Characteristics and Ratings

Parameter	Conditions		Min.	Typ.	Max.	Unit
Device Flatness	*See Figure 9*		0	-	+ 120	μm
Mounting Torque	Mounting Screw: M3	Recommended 0.7 N • m	0.6	0.7	0.8	N • m
	See Figure 10	Recommended 7.1 kg • cm	6.2	7.1	8.1	kg • cm
Weight			-	11.00	-	g

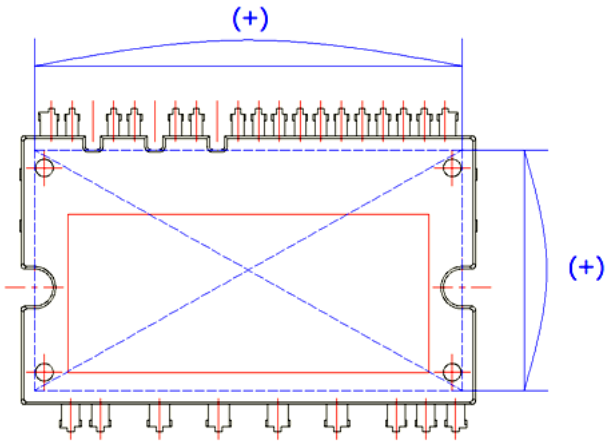

Figure 9. Flatness Measurement Position

Pre - Screwing : 1→2

Final Screwing : 2→1

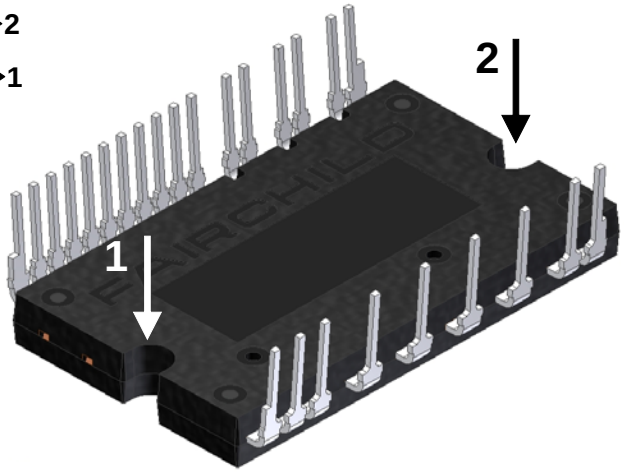

Figure 10. Mounting Screws Torque Order

Note:

12. Do not make over torque when mounting screws. Much mounting torque may cause ceramic cracks, as well as bolts and Al heat-sink destruction.
13. Avoid one-sided tightening stress. Figure 10 shows the recommended torque order for mounting screws. Uneven mounting can cause the ceramic substrate of package to be damaged. The pre-screwing torque is set to 20 ~ 30% of maximum torque rating.

Time Charts of Protective Function

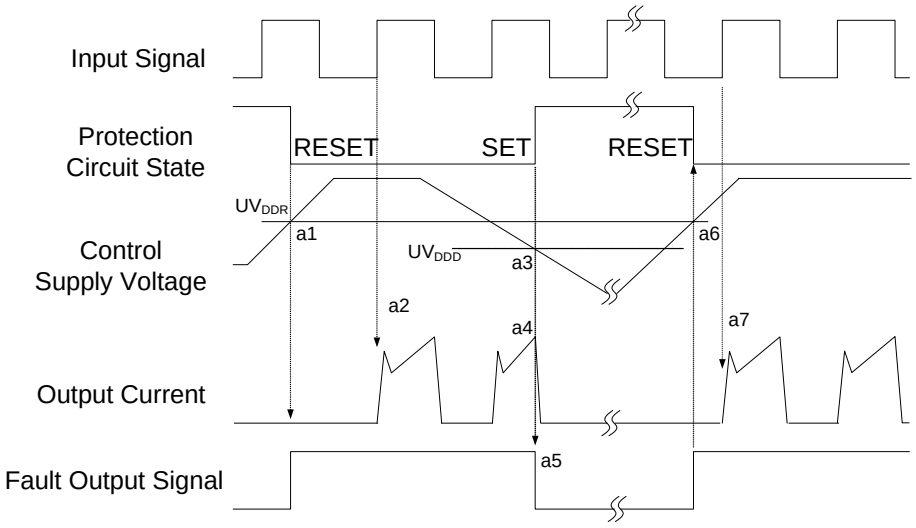

Figure 11. Under-Voltage Protection (Low-Side)

a1 : Control supply voltage rises: After the voltage rises UV_{DDR}, the circuits start to operate when next input is applied.

a2 : Normal operation: IGBT ON and carrying current.

a3 : Under voltage detection (UV_{DDD}).

a4 : IGBT OFF in spite of control input condition.

a5 : Fault output operation starts with a fixed pulse width.

a6 : Under voltage reset (UV_{DDR}).

a7 : Normal operation: IGBT ON and carrying current by triggering next signal from LOW to HIGH.

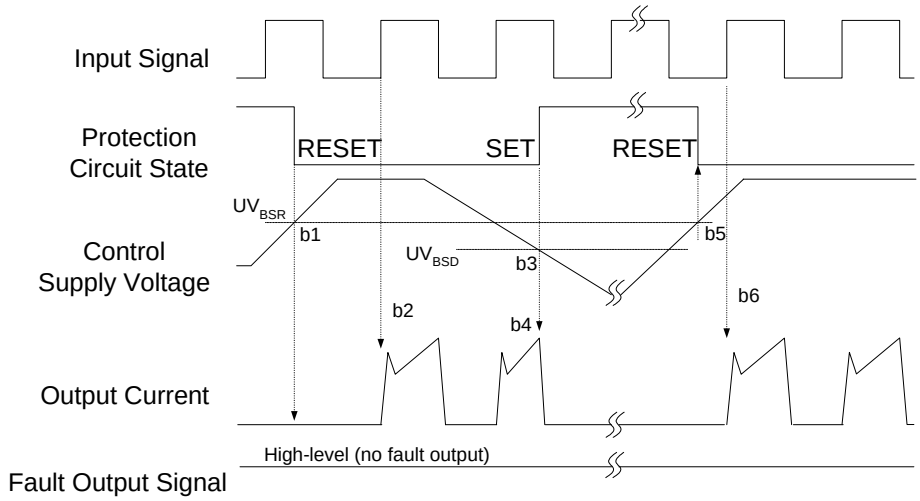

Figure 12. Under-Voltage Protection (High-Side)

b1 : Control supply voltage rises: After the voltage reaches UV_{BSR}, the circuits start to operate when next input is applied.

b2 : Normal operation: IGBT ON and carrying current.

b3 : Under voltage detection (UV_{BSD}).

b4 : IGBT OFF in spite of control input condition, but there is no fault output signal.

b5 : Under voltage reset (UV_{BSR}).

b6 : Normal operation: IGBT ON and carrying current by triggering next signal from LOW to HIGH.

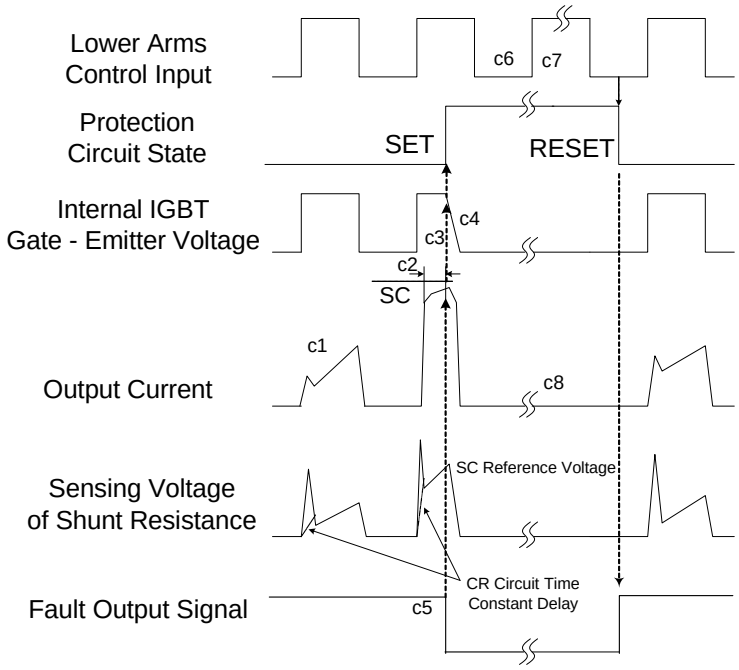

Figure 13. Short-Circuit Protection (Low-Side Operation Only)

(with the external sense resistance and RC filter connection)

c1 : Normal operation: IGBT ON and carrying current.

c2 : Short circuit current detection (SC trigger).

c3 : All low-side IGBT's gate are hard interrupted.

c4 : All low-side IGBTs turn OFF.

c5 : Fault output operation starts with a fixed pulse width.

c6 : Input HIGH: IGBT ON state, but during the active period of fault output the IGBT doesn't turn ON.

c7 : Fault output operation finishes, but IGBT doesn't turn on until triggering next signal from LOW to HIGH.

c8 : Normal operation: IGBT ON and carrying current.

Input/Output Interface Circuit

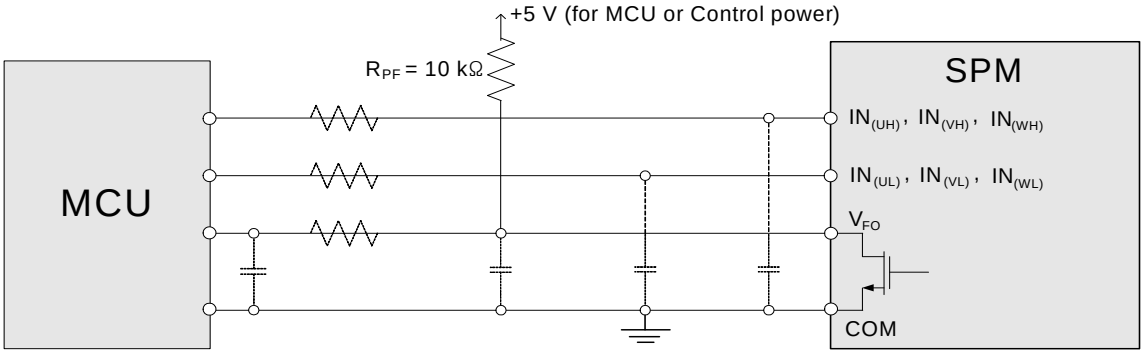

Figure 14. Recommended MCU I/O Interface Circuit

Note:

14. RC coupling at each input might change depending on the PWM control scheme used in the application and the wiring impedance of the application's printed circuit board. The input signal section of the Motion SPM 45 product integrates 5 kΩ(typ.) pull-down resistor. Therefore, when using an external filtering resistor, please pay attention to the signal voltage drop at input terminal.

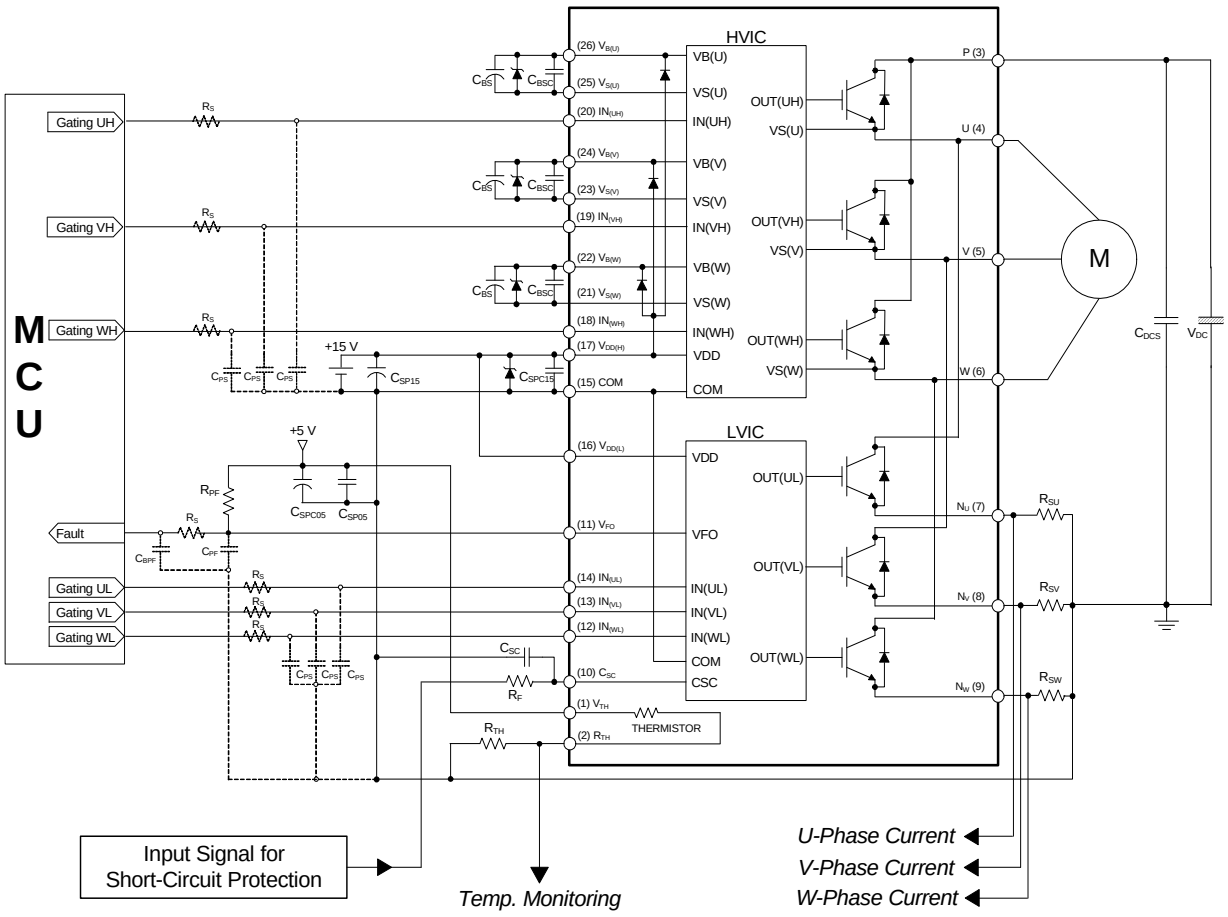

Figure 15. Typical Application Circuit

Note:

15. To avoid malfunction, the wiring of each input should be as short as possible (less than 2 - 3 cm).
16. V_{FO} output is open-drain type. This signal line should be pulled up to the positive side of the MCU or control power supply with a resistor that makes I_{FO} up to 1 mA.
17. C_{SP15} of around seven times larger than bootstrap capacitor C_{BS} is recommended.
18. Input signal is active-HIGH type. There is a 5 kΩ resistor inside the IC to pull down each input signal line to GND. RC coupling circuits is recommanded for the prevention of input signal oscillation. $R_S C_{PS}$ time constant should be selected in the range 50 ~ 150 ns (recommended R_S = 100 Ω, C_{PS} = 1 nF).
19. To prevent errors of the protection function, the wiring around R_F and C_{SC} should be as short as possible.
20. In the short-circuit protection circuit, please select the $R_F C_{SC}$ time constant in the range 1.5 ~ 2 μs. Do enough evaluaiton on the real system because short-circuit protection time may vary wiring pattern layout and value of the $R_F C_{SC}$ time constant.
21. The connection between control GND line and power GND line which includes the N_U, N_V, N_W must be connected to only one point. Please do not connect the control GND to the power GND by the broad pattern. Also, the wiring distance between control GND and power GND should be as short as possible.
22. Each capacitor should be mounted as close to the pins of the Motion SPM 45 product as possible.
23. To prevent surge destruction, the wiring between the smoothing capacitor and the P & GND pins should be as short as possible. The use of a high-frequency non-inductive capacitor of around 0.1 ~ 0.22 μF between the P and GND pins is recommended.
24. Relays are used in almost every systems of electrical equipment in home appliances. In these cases, there should be sufficient distance between the MCU and the relays.
25. The zener diode or transient voltage suppressor should be adopted for the protection of ICs from the surge destruction between each pair of control supply terminals (recommanded zener diode is 22 V / 1 W, which has the lower zener impedance characteristic than about 15Ω).
26. Please choose the electrolytic capacitor with good temperature characteristic in C_{BS}. Also, choose 0.1 ~ 0.2 μF R-category ceramic capacitors with good temperature and frequency characteristics in C_{BSC}.

Detailed Package Outline Drawings (FNB43060T2)

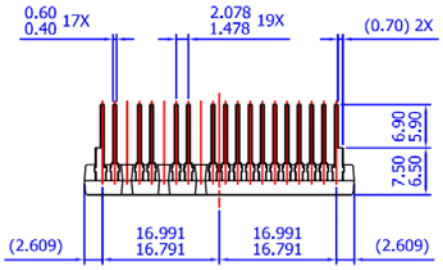

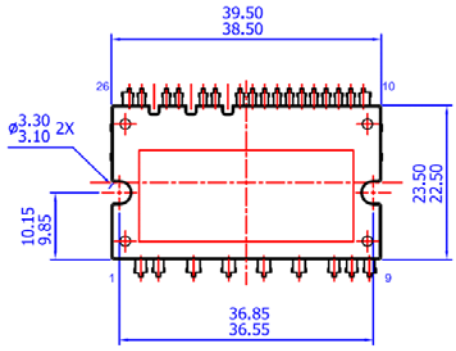

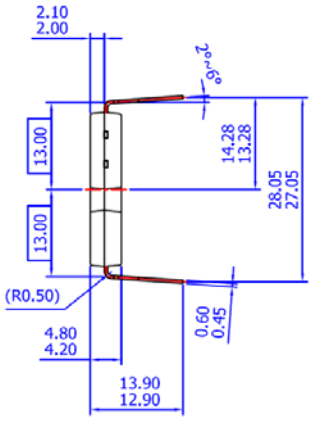

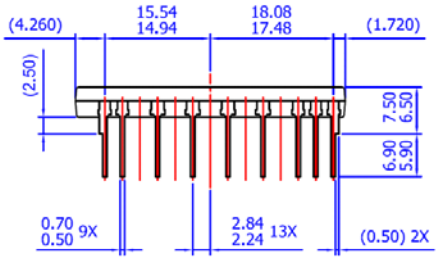

NOTES: UNLESS OTHERWISE SPECIFIED
A) THIS PACKAGE DOES NOT COMPLY TO ANY CURRENT PACKAGING STANDARD
B) ALL DIMENSIONS ARE IN MILLIMETERS
C) DIMENSIONS ARE EXCLUSIVE OF BURRS, MOLD FLASH, AND TIE BAR EXTRUSIONS
D) ( ) IS REFERENCE
E) [ ] IS ASS'Y QUALITY
F) DRAWING FILENAME: MOD26ACREV2.0

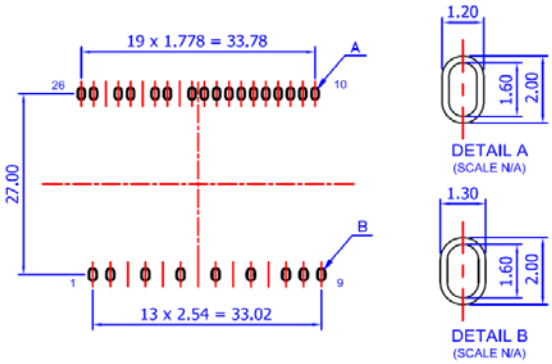

LAND PATTERN RECOMMENDATIONS

Package drawings are provided as a service to customers considering Fairchild components. Drawings may change in any manner without notice. Please note the revision and/or data on the drawing and contact a FairchildSemiconductor representative to verify or obtain the most recent revision. Package specifications do not expand the terms of Fairchild's worldwide therm and conditions, specifically the the warranty therein, which covers Fairchild products.

Always visit Fairchild Semiconductor's online packaging area for the most recent package drawings:

http://www.fairchildsemi.com/dwg/MO/MOD26AA.pdf

TRADEMARKS

The following includes registered and unregistered trademarks and service marks, owned by Fairchild Semiconductor and/or its global subsidiaries, and is not intended to be an exhaustive list of all such trademarks.

AccuPower™
AttitudeEngine™
Awinda®
AX-CAP®*
BitSiC™
Build it Now™
CorePLUS™
CorePOWER™
CROSSVOLT™
CTL™
Current Transfer Logic™
DEUXPEED®
Dual Cool™
EcoSPARK®
EfficientMax™
ESBC™
Fairchild®
Fairchild Semiconductor®
FACT Quiet Series™
FACT®
FastvCore™
FETBench™
FPS™
F-PFS™
FRFET®
Global Power Resource℠
GreenBridge™
Green FPS™
Green FPS™ e-Series™
Gmax™
GTO™
IntelliMAX™
ISOPLANAR™
Making Small Speakers Sound Louder and Better™
MegaBuck™
MICROCOUPLER™
MicroFET™
MicroPak™
MicroPak2™
MillerDrive™
MotionMax™
MotionGrid®
MTi®
MTx®
MVN®
mWSaver®
OptoHiT™
OPTOLOGIC®
OPTOPLANAR®
Power Supply WebDesigner™
PowerTrench®
PowerXS™
Programmable Active Droop™
QFET®
QS™
Quiet Series™
RapidConfigure™
Saving our world, 1mW/W/kW at a time™
SignalWise™
SmartMax™
SMART START™
Solutions for Your Success™
SPM®
STEALTH™
SuperFET®
SuperSOT™-3
SuperSOT™-6
SuperSOT™-8
SupreMOS®
SyncFET™
Sync-Lock™
SYSTEM GENERAL®*
TinyBoost®
TinyBuck®
TinyCalc™
TinyLogic®
TINYOPTO™
TinyPower™
TinyPWM™
TinyWire™
TranSiC™
TriFault Detect™
TRUECURRENT®*
μSerDes™
UHC®
Ultra FRFET™
UniFET™
VCX™
VisualMax™
VoltagePlus™
XS™
Xsens™
仙童®

* Trademarks of System General Corporation, used under license by Fairchild Semiconductor.

DISCLAIMER

FAIRCHILD SEMICONDUCTOR RESERVES THE RIGHT TO MAKE CHANGES WITHOUT FURTHER NOTICE TO ANY PRODUCTS HEREIN TO IMPROVE RELIABILITY, FUNCTION, OR DESIGN. TO OBTAIN THE LATEST, MOST UP-TO-DATE DATASHEET AND PRODUCT INFORMATION, VISIT OUR WEBSITE AT HTTP://WWW.FAIRCHILDSEMI.COM. FAIRCHILD DOES NOT ASSUME ANY LIABILITY ARISING OUT OF THE APPLICATION OR USE OF ANY PRODUCT OR CIRCUIT DESCRIBED HEREIN; NEITHER DOES IT CONVEY ANY LICENSE UNDER ITS PATENT RIGHTS, NOR THE RIGHTS OF OTHERS. THESE SPECIFICATIONS DO NOT EXPAND THE TERMS OF FAIRCHILD'S WORLDWIDE TERMS AND CONDITIONS, SPECIFICALLY THE WARRANTY THEREIN, WHICH COVERS THESE PRODUCTS.

AUTHORIZED USE

Unless otherwise specified in this data sheet, this product is a standard commercial product and is not intended for use in applications that require extraordinary levels of quality and reliability. This product may not be used in the following applications, unless specifically approved in writing by a Fairchild officer: (1) automotive or other transportation, (2) military/aerospace, (3) any safety critical application – including life critical medical equipment – where the failure of the Fairchild product reasonably would be expected to result in personal injury, death or property damage. Customer's use of this product is subject to agreement of this Authorized Use policy. In the event of an unauthorized use of Fairchild's product, Fairchild accepts no liability in the event of product failure. In other respects, this product shall be subject to Fairchild's Worldwide Terms and Conditions of Sale, unless a separate agreement has been signed by both Parties.

ANTI-COUNTERFEITING POLICY

Fairchild Semiconductor Corporation's Anti-Counterfeiting Policy. Fairchild's Anti-Counterfeiting Policy is also stated on our external website, www.fairchildsemi.com, under Terms of Use

Counterfeiting of semiconductor parts is a growing problem in the industry. All manufacturers of semiconductor products are experiencing counterfeiting of their parts. Customers who inadvertently purchase counterfeit parts experience many problems such as loss of brand reputation, substandard performance, failed applications, and increased cost of production and manufacturing delays. Fairchild is taking strong measures to protect ourselves and our customers from the proliferation of counterfeit parts. Fairchild strongly encourages customers to purchase Fairchild parts either directly from Fairchild or from Authorized Fairchild Distributors who are listed by country on our web page cited above. Products customers buy either from Fairchild directly or from Authorized Fairchild Distributors are genuine parts, have full traceability, meet Fairchild's quality standards for handling and storage and provide access to Fairchild's full range of up-to-date technical and product information. Fairchild and our Authorized Distributors will stand behind all warranties and will appropriately address any warranty issues that may arise. Fairchild will not provide any warranty coverage or other assistance for parts bought from Unauthorized Sources. Fairchild is committed to combat this global problem and encourage our customers to do their part in stopping this practice by buying direct or from authorized distributors.

PRODUCT STATUS DEFINITIONS

Definition of Terms

Datasheet Identification	Product Status	Definition
Advance Information	Formative / In Design	Datasheet contains the design specifications for product development. Specifications may change in any manner without notice.
Preliminary	First Production	Datasheet contains preliminary data; supplementary data will be published at a later date. Fairchild Semiconductor reserves the right to make changes at any time without notice to improve design.
No Identification Needed	Full Production	Datasheet contains final specifications. Fairchild Semiconductor reserves the right to make changes at any time without notice to improve the design.
Obsolete	Not In Production	Datasheet contains specifications on a product that is discontinued by Fairchild Semiconductor. The datasheet is for reference information only.

Rev. I77

ON Semiconductor and ON are trademarks of Semiconductor Components Industries, LLC dba ON Semiconductor or its subsidiaries in the United States and/or other countries. ON Semiconductor owns the rights to a number of patents, trademarks, copyrights, trade secrets, and other intellectual property. A listing of ON Semiconductor's product/patent coverage may be accessed at www.onsemi.com/site/pdf/Patent−Marking.pdf. ON Semiconductor reserves the right to make changes without further notice to any products herein. ON Semiconductor makes no warranty, representation or guarantee regarding the suitability of its products for any particular purpose, nor does ON Semiconductor assume any liability arising out of the application or use of any product or circuit, and specifically disclaims any and all liability, including without limitation special, consequential or incidental damages. Buyer is responsible for its products and applications using ON Semiconductor products, including compliance with all laws, regulations and safety requirements or standards, regardless of any support or applications information provided by ON Semiconductor. "Typical" parameters which may be provided in ON Semiconductor data sheets and/or specifications can and do vary in different applications and actual performance may vary over time. All operating parameters, including "Typicals" must be validated for each customer application by customer's technical experts. ON Semiconductor does not convey any license under its patent rights nor the rights of others. ON Semiconductor products are not designed, intended, or authorized for use as a critical component in life support systems or any FDA Class 3 medical devices or medical devices with a same or similar classification in a foreign jurisdiction or any devices intended for implantation in the human body. Should Buyer purchase or use ON Semiconductor products for any such unintended or unauthorized application, Buyer shall indemnify and hold ON Semiconductor and its officers, employees, subsidiaries, affiliates, and distributors harmless against all claims, costs, damages, and expenses, and reasonable attorney fees arising out of, directly or indirectly, any claim of personal injury or death associated with such unintended or unauthorized use, even if such claim alleges that ON Semiconductor was negligent regarding the design or manufacture of the part. ON Semiconductor is an Equal Opportunity/Affirmative Action Employer. This literature is subject to all applicable copyright laws and is not for resale in any manner.

PUBLICATION ORDERING INFORMATION

LITERATURE FULFILLMENT:
Literature Distribution Center for ON Semiconductor
19521 E. 32nd Pkwy, Aurora, Colorado 80011 USA
Phone: 303−675−2175 or 800−344−3860 Toll Free USA/Canada
Fax: 303−675−2176 or 800−344−3867 Toll Free USA/Canada
Email: orderlit@onsemi.com

N. American Technical Support: 800−282−9855 Toll Free USA/Canada
Europe, Middle East and Africa Technical Support:
Phone: 421 33 790 2910
Japan Customer Focus Center
Phone: 81−3−5817−1050

ON Semiconductor Website: **www.onsemi.com**

Order Literature: http://www.onsemi.com/orderlit

For additional information, please contact your local Sales Representative