FAIRCHILD™

Is Now Part of

ON Semiconductor®

To learn more about ON Semiconductor, please visit our website at
www.onsemi.com

ON Semiconductor and the ON Semiconductor logo are trademarks of Semiconductor Components Industries, LLC dba ON Semiconductor or its subsidiaries in the United States and/or other countries. ON Semiconductor owns the rights to a number of patents, trademarks, copyrights, trade secrets, and other intellectual property. A listing of ON Semiconductor's product/patent coverage may be accessed at www.onsemi.com/site/pdf/Patent-Marking.pdf. ON Semiconductor reserves the right to make changes without further notice to any products herein. ON Semiconductor makes no warranty, representation or guarantee regarding the suitability of its products for any particular purpose, nor does ON Semiconductor assume any liability arising out of the application or use of any product or circuit, and specifically disclaims any and all liability, including without limitation special, consequential or incidental damages. Buyer is responsible for its products and applications using ON Semiconductor products, including compliance with all laws, regulations and safety requirements or standards, regardless of any support or applications information provided by ON Semiconductor. "Typical" parameters which may be provided in ON Semiconductor data sheets and/or specifications can and do vary in different applications and actual performance may vary over time. All operating parameters, including "Typicals" must be validated for each customer application by customer's technical experts. ON Semiconductor does not convey any license under its patent rights nor the rights of others. ON Semiconductor products are not designed, intended, or authorized for use as a critical component in life support systems or any FDA Class 3 medical devices or medical devices with a same or similar classification in a foreign jurisdiction or any devices intended for implantation in the human body. Should Buyer purchase or use ON Semiconductor products for any such unintended or unauthorized application, Buyer shall indemnify and hold ON Semiconductor and its officers, employees, subsidiaries, affiliates, and distributors harmless against all claims, costs, damages, and expenses, and reasonable attorney fees arising out of, directly or indirectly, any claim of personal injury or death associated with such unintended or unauthorized use, even if such claim alleges that ON Semiconductor was negligent regarding the design or manufacture of the part. ON Semiconductor is an Equal Opportunity/Affirmative Action Employer. This literature is subject to all applicable copyright laws and is not for resale in any manner.

FAIRCHILD SEMICONDUCTOR™

July 2001
Revised November 2005

NC7NZ34
TinyLogic® UHS Triple Buffer

General Description

The NC7NZ34 is a triple buffer from Fairchild's Ultra High Speed Series of TinyLogic® in the space saving US8 package. The device is fabricated with advanced CMOS technology to achieve ultra high speed with high output drive while maintaining low static power dissipation over a very broad V_{CC} operating range. The device is specified to operate over the 1.65V to 5.5V V_{CC} range. The inputs and outputs are high impedance when V_{CC} is 0V. Inputs tolerate voltages up to 7V independent of V_{CC} operating voltage.

Features

- Space saving US8 surface mount package
- MicroPak™ Pb-Free leadless package
- Ultra High Speed: t_{PD} 2.4 ns Typ into 50 pF at 5V V_{CC}
- High Output Drive: ±24 mA at 3V V_{CC}
- Broad V_{CC} Operating Range: 1.65V to 5.5V
- Power down high impedance inputs/outputs
- Overvoltage tolerant inputs facilitate 5V to 3V translation
- Proprietary noise/EMI reduction circuitry implemented

Ordering Code:

Order Number	Package Number	Product Code Top Mark	Package Description	Supplied As
NC7NZ34K8X	MAB08A	NZ34	8-Lead US8, JEDEC MO-187, Variation CA 3.1mm Wide	3k Units on Tape and Reel
NC7NZ34L8X	MAC08A	P9	Pb-Free 8-Lead MicroPak, 1.6 mm Wide	5k Units on Tape and Reel

Pb-Free package per JEDEC J-STD-020B.

Logic Symbol

IEEE/IEC

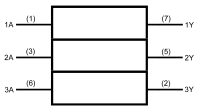

Pin Descriptions

Pin Names	Description
A_1, A_2, A_3	Data Inputs
Y_1, Y_2, Y_3	Output

Function Table

Y = A

Input	Output
A	**Y**
L	L
H	H

H = HIGH Logic Level
L = LOW Logic Level

Connection Diagrams

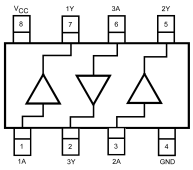

(Top View)

Pin One Orientation Diagram

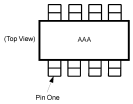

AAA represents Product Code Top Mark - see ordering code

Note: Orientation of Top Mark determines Pin One location. Read the top product code mark left to right, Pin One is the lower left pin (see diagram).

Pad Assignments for MicroPak

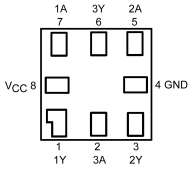

(Top Thru View)

TinyLogic® is a registered trademark of Fairchild Semiconductor Corporation.

MicroPak™ is a trademark of Fairchild Semiconductor Corporation.

© 2005 Fairchild Semiconductor Corporation

Absolute Maximum Ratings (Note 1)

Supply Voltage (V_{CC})	–0.5V to +7.0V
DC Input Voltage (V_{IN})	–0.5V to +7.0V
DC Output Voltage (V_{OUT})	–0.5V to +7.0V
DC Input Diode Current (I_{IK})	
$V_{IN} < 0V$	–50 mA
DC Output Diode Current (I_{OK})	
$V_{OUT} < 0V$	–50 mA
DC Output Source/Sink Current (I_{OUT})	±50 mA
DC V_{CC}/GND Current (I_{CC}/I_{GND})	±100 mA
Storage Temperature (T_{STG})	–65°C to +150°C
Junction Temperature under Bias (T_J)	150°C
Junction Lead Temperature (T_L)	
(Soldering, 10 seconds)	260°C
Power Dissipation (P_D) @ +85°C	250 mW

Recommended Operating Conditions (Note 2)

Supply Voltage	
Operating (V_{CC})	1.65V to 5.5V
Data Retention	1.5V to 5.5V
Input Voltage (V_{IN})	0V to 5.5V
Output Voltage (V_{OUT})	0V to V_{CC}
Input Rise and Fall Time (t_r, t_f)	
V_{CC} = 1.8V, 2.5V ± 0.2V	0 to 20 ns/V
V_{CC} = 3.3V ± 0.3V	0 to 10 ns/V
V_{CC} = 5.5V ± 0.5V	0 to 5 ns/V
Operating Temperature (T_A)	–40°C to +85°C
Thermal Resistance (θ_{JA})	250°C/W

Note 1: Absolute maximum ratings are DC values beyond which the device may be damaged or have its useful life impaired. The datasheet specifications should be met, without exception, to ensure that the system design is reliable over its power supply, temperature, and output/input loading variables. Fairchild does not recommend operation outside datasheet specifications.

Note 2: Unused inputs must be held HIGH or LOW. They may not float.

DC Electrical Characteristics

Symbol	Parameter	V_{CC} (V)	T_A = +25°C Min	Typ	Max	T_A = –40°C to +85°C Min	Max	Units	Conditions	
V_{IH}	HIGH Level Control Input Voltage	1.8 ± 0.15	0.75 V_{CC}			0.75 V_{CC}		V		
		2.3 to 5.5	0.7 V_{CC}			0.7 V_{CC}				
V_{IL}	LOW Level Control Input Voltage	1.8 ± 0.15			0.25 V_{CC}		0.25 V_{CC}	V		
		2.3 to 5.5			0.3 V_{CC}		0.3 V_{CC}			
V_{OH}	HIGH Level Control Output Voltage	1.65	1.55	1.65		1.55		V	$V_{IN} = V_{IH}$	I_{OH} = –100 µA
		2.3	2.2	2.3		2.2				
		3.0	2.9	3.0		2.9				
		4.5	4.4	4.5		4.4				
		1.65	1.29	1.52		1.29				I_{OH} = –4 mA
		2.3	1.9	2.14		1.9				I_{OH} = –8 mA
		3.0	2.4	2.75		2.4				I_{OH} = –16 mA
		3.0	2.3	2.62		2.3				I_{OH} = –24 mA
		4.5	3.8	4.13		3.8				I_{OH} = –32 mA
V_{OL}	LOW Level Control Output Voltage	1.65		0.0	0.1		0.1	V	$V_{IN} = V_{IL}$	I_{OL} = 100 µA
		2.3		0.0	0.1		0.1			
		3.0		0.0	0.1		0.1			
		4.5		0.0	0.1		0.1			
		1.65		0.08	0.24		0.24			I_{OL} = 4 mA
		2.3		0.10	0.3		0.3			I_{OL} = 8 mA
		3.0		0.16	0.4		0.4			I_{OL} = 16 mA
		3.0		0.24	0.55		0.55			I_{OL} = 24 mA
		4.5		0.25	0.55		0.55			I_{OL} = 32 mA
I_{IN}	Input Leakage Current	0 to 5.5			±0.1		±1.0	µA	0 ≤ V_{IN} ≤ 5.5V	
I_{OFF}	Power Off Leakage Current	0.0			1.0		10	µA	V_{IN} or V_{OUT} = 5.5V	
I_{CC}	Quiescent Supply Current	1.65 to 5.5			1.0		10	µA	V_{IN} = 5.5V, GND	

AC Electrical Characteristics

Symbol	Parameter	V_{CC} (V)	$T_A = +25°C$ Min	Typ	Max	$T_A = -40°C$ to $+85°C$ Min	Max	Units	Conditions	Figure Number
t_{PLH} t_{PHL}	Propagation Delay	1.8 ± 0.15	1.8	4.6	8.0	1.8	8.8	ns	$C_L = 15$ pF, $R_L = 1$ MΩ	Figures 1, 3
		2.5 ± 0.2	1.0	3.0	5.2	1.0	5.8			
		3.3 ± 0.3	0.8	2.3	3.6	0.8	4.0			
		5.0 ± 0.5	0.5	1.8	2.9	0.5	3.2			
t_{PLH} t_{PHL}	Propagation Delay	3.3 ± 0.3	1.2	3.0	4.6	1.2	5.1	ns	$C_L = 50$ pF, $R_L = 500\Omega$	Figures 1, 3
		5.0 ± 0.5	0.8	2.4	3.8	0.8	4.2			
C_{IN}	Input Capacitance	0		2.5				pF		
C_{PD}	Power Dissipation Capacitance	3.3		9				pF	(Note 3)	Figure 2
		5.0		11						

Note 3: C_{PD} is defined as the value of the internal equivalent capacitance which is derived from dynamic operating current consumption (I_{CCD}) at no output loading and operating at 50% duty cycle. (See Figure 2.) C_{PD} is related to I_{CCD} dynamic operating current by the expression:
$I_{CCD} = (C_{PD})(V_{CC})(f_{IN}) + (I_{CC}static)$.

Dynamic Switching Characteristics

Symbol	Parameter	Conditions	V_{CC} (V)	$T_A = 25°C$ Typical	Unit
V_{OLP}	Quiet Output Dynamic Peak V_{OL}	$C_L = 50$pF, $V_{IH} = 5.0$V, $V_{IL} = 0$V	5.0	0.8	V
V_{OLV}	Quiet Output Dynamic Valley V_{OL}	$C_L = 50$pF, $V_{IH} = 5.0$V, $V_{IL} = 0$V	5.0	–0.8	V

AC Loading and Waveforms

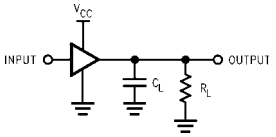

C_L includes load and stray capacitance
Input PRR = 1.0 MHz; $t_W = 500$ ns

FIGURE 1. AC Test Circuit

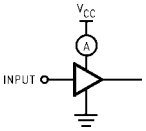

Input = AC Waveform; $t_r = t_f = 1.8$ ns;
PRR = 10 MHz; Duty Cycle = 50%

FIGURE 2. I_{CCD} Test Circuit

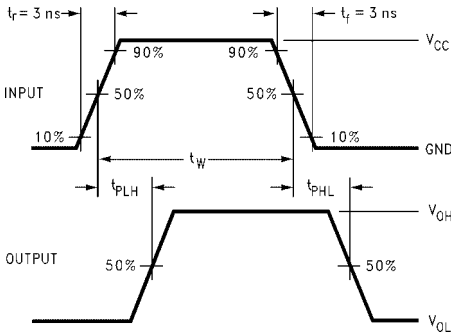

FIGURE 3. AC Waveforms

Tape and Reel Specification

TAPE FORMAT for US8

Package Designator	Tape Section	Number Cavities	Cavity Status	Cover Tape Status
K8X	Leader (Start End)	125 (typ)	Empty	Sealed
	Carrier	3000	Filled	Sealed
	Trailer (Hub End)	75 (typ)	Empty	Sealed

TAPE DIMENSIONS inches (millimeters)

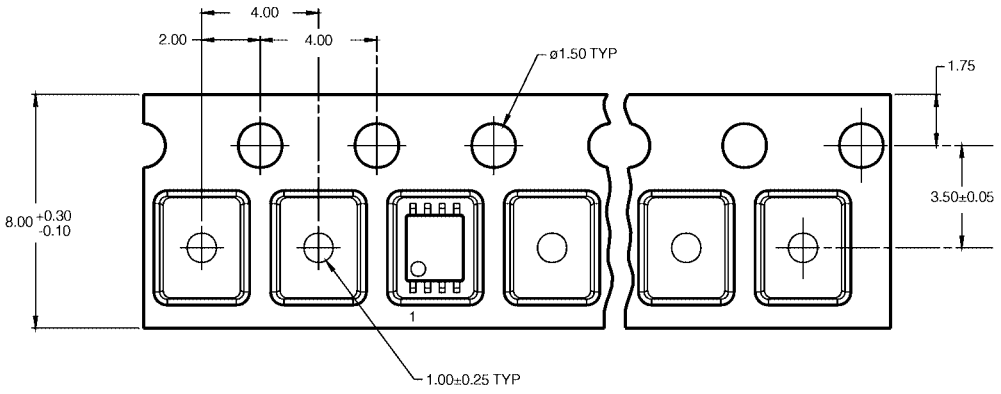

TAPE FORMAT for MicroPak

Package Designator	Tape Section	Number Cavities	Cavity Status	Cover Tape Status
K8X	Leader (Start End)	125 (typ)	Empty	Sealed
	Carrier	3000	Filled	Sealed
	Trailer (Hub End)	75 (typ)	Empty	Sealed

TAPE DIMENSIONS inches (millimeters)

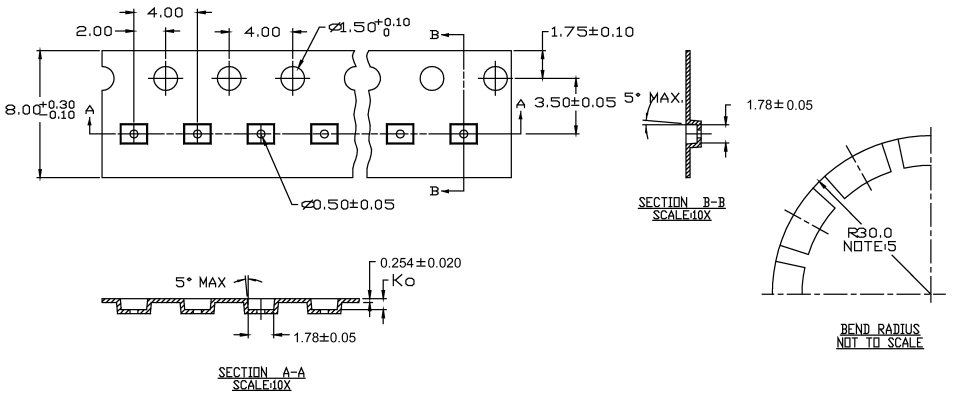

Tape and Reel Specification (Continued)

REEL DIMENSIONS inches (millimeters)

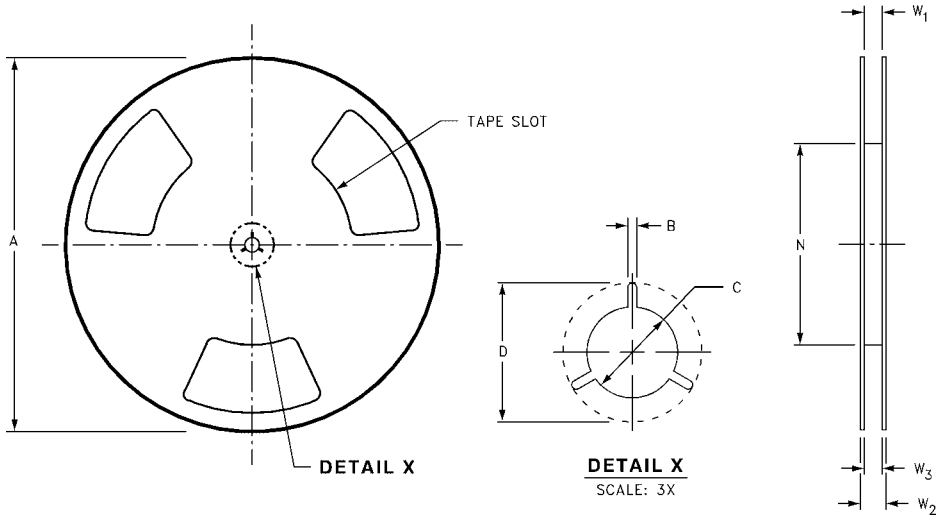

Tape Size	A	B	C	D	N	W1	W2	W3
8 mm	7.0 (177.8)	0.059 (1.50)	0.512 (13.00)	0.795 (20.20)	2.165 (55.00)	0.331 + 0.059/–0.000 (8.40 + 1.50/–0.00)	0.567 (14.40)	W1 + 0.078/–0.039 (W1 + 2.00/–1.00)

Physical Dimensions inches (millimeters) unless otherwise noted

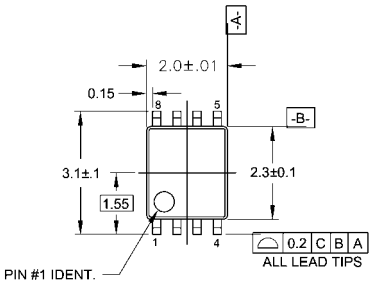

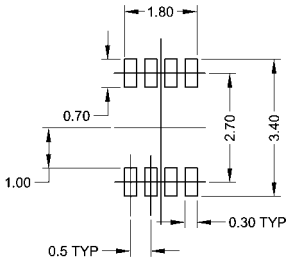

LAND PATTERN RECOMMENDATION

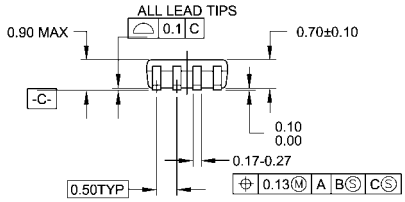

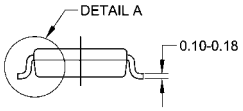

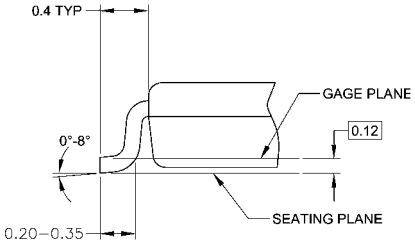

DETAIL A

NOTES:

A. CONFORMS TO JEDEC REGISTRATION MO-187
B. DIMENSIONS ARE IN MILLIMETERS.
C. DIMENSIONS ARE EXCLUSIVE OF BURRS, MOLD FLASH, AND TIE BAR EXTRUSIONS.
D. DIMENSIONS AND TOLERANCES PER ANSI Y14.5M, 1982.

MAB08AREVC

8-Lead US8, JEDEC MO-187, Variation CA 3.1mm Wide
Package Number MAB08A

Physical Dimensions inches (millimeters) unless otherwise noted (Continued)

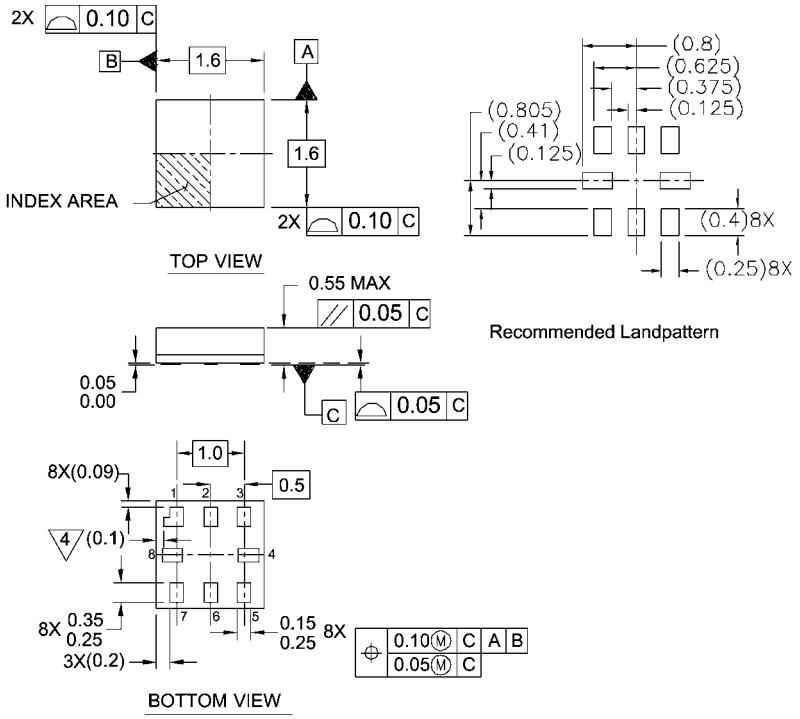

Notes:

1. PACKAGE CONFORMS TO JEDEC MO-255 VARIATION UAAD
2. DIMENSIONS ARE IN MILLIMETERS
3. DRAWING CONFORMS TO ASME Y.14M-1994
4. PIN 1 FLAG, END OF PACKAGE OFFSET.

MAC08AREVC

Pb-Free 8-Lead MicroPak, 1.6 mm Wide
Package Number MAC08A

Fairchild does not assume any responsibility for use of any circuitry described, no circuit patent licenses are implied and Fairchild reserves the right at any time without notice to change said circuitry and specifications.

LIFE SUPPORT POLICY

FAIRCHILD'S PRODUCTS ARE NOT AUTHORIZED FOR USE AS CRITICAL COMPONENTS IN LIFE SUPPORT DEVICES OR SYSTEMS WITHOUT THE EXPRESS WRITTEN APPROVAL OF THE PRESIDENT OF FAIRCHILD SEMICONDUCTOR CORPORATION. As used herein:

1. Life support devices or systems are devices or systems which, (a) are intended for surgical implant into the body, or (b) support or sustain life, and (c) whose failure to perform when properly used in accordance with instructions for use provided in the labeling, can be reasonably expected to result in a significant injury to the user.
2. A critical component in any component of a life support device or system whose failure to perform can be reasonably expected to cause the failure of the life support device or system, or to affect its safety or effectiveness.

www.fairchildsemi.com

ON Semiconductor and ON are trademarks of Semiconductor Components Industries, LLC dba ON Semiconductor or its subsidiaries in the United States and/or other countries. ON Semiconductor owns the rights to a number of patents, trademarks, copyrights, trade secrets, and other intellectual property. A listing of ON Semiconductor's product/patent coverage may be accessed at www.onsemi.com/site/pdf/Patent−Marking.pdf. ON Semiconductor reserves the right to make changes without further notice to any products herein. ON Semiconductor makes no warranty, representation or guarantee regarding the suitability of its products for any particular purpose, nor does ON Semiconductor assume any liability arising out of the application or use of any product or circuit, and specifically disclaims any and all liability, including without limitation special, consequential or incidental damages. Buyer is responsible for its products and applications using ON Semiconductor products, including compliance with all laws, regulations and safety requirements or standards, regardless of any support or applications information provided by ON Semiconductor. "Typical" parameters which may be provided in ON Semiconductor data sheets and/or specifications can and do vary in different applications and actual performance may vary over time. All operating parameters, including "Typicals" must be validated for each customer application by customer's technical experts. ON Semiconductor does not convey any license under its patent rights nor the rights of others. ON Semiconductor products are not designed, intended, or authorized for use as a critical component in life support systems or any FDA Class 3 medical devices or medical devices with a same or similar classification in a foreign jurisdiction or any devices intended for implantation in the human body. Should Buyer purchase or use ON Semiconductor products for any such unintended or unauthorized application, Buyer shall indemnify and hold ON Semiconductor and its officers, employees, subsidiaries, affiliates, and distributors harmless against all claims, costs, damages, and expenses, and reasonable attorney fees arising out of, directly or indirectly, any claim of personal injury or death associated with such unintended or unauthorized use, even if such claim alleges that ON Semiconductor was negligent regarding the design or manufacture of the part. ON Semiconductor is an Equal Opportunity/Affirmative Action Employer. This literature is subject to all applicable copyright laws and is not for resale in any manner.

PUBLICATION ORDERING INFORMATION

LITERATURE FULFILLMENT:
Literature Distribution Center for ON Semiconductor
19521 E. 32nd Pkwy, Aurora, Colorado 80011 USA
Phone: 303−675−2175 or 800−344−3860 Toll Free USA/Canada
Fax: 303−675−2176 or 800−344−3867 Toll Free USA/Canada
Email: orderlit@onsemi.com

N. American Technical Support: 800−282−9855 Toll Free USA/Canada
Europe, Middle East and Africa Technical Support:
Phone: 421 33 790 2910
Japan Customer Focus Center
Phone: 81−3−5817−1050

ON Semiconductor Website: **www.onsemi.com**

Order Literature: http://www.onsemi.com/orderlit

For additional information, please contact your local Sales Representative