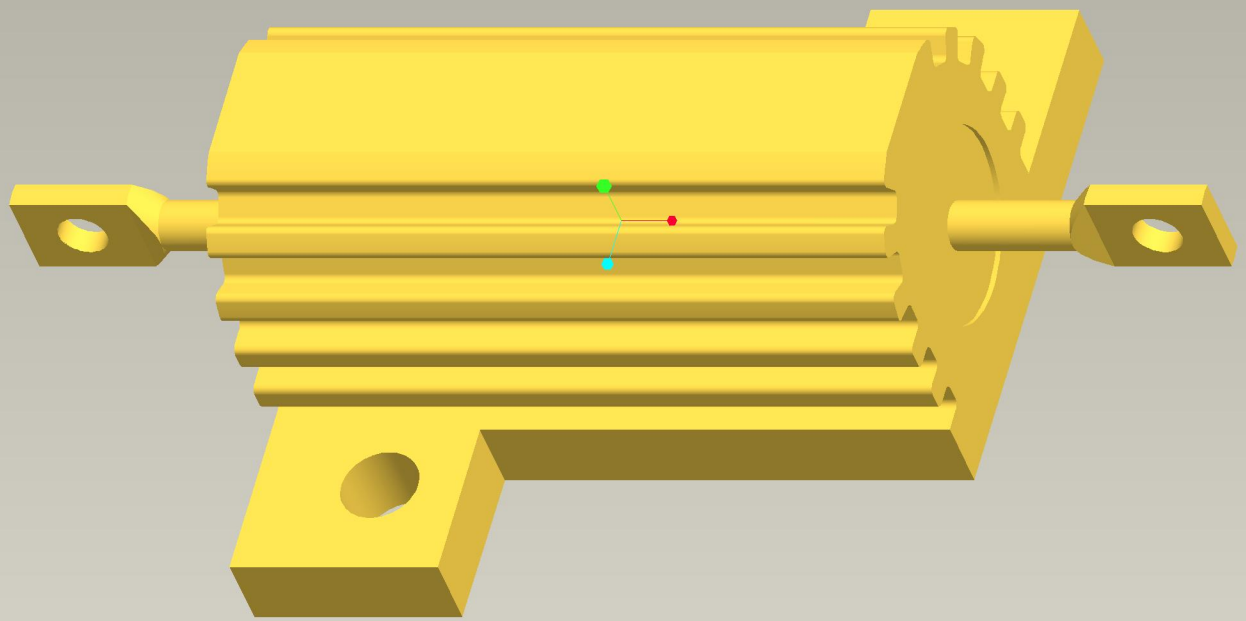

Instance:C-1676625-1