Is Now Part of

ON Semiconductor®

To learn more about ON Semiconductor, please visit our website at
www.onsemi.com

ON Semiconductor and the ON Semiconductor logo are trademarks of Semiconductor Components Industries, LLC dba ON Semiconductor or its subsidiaries in the United States and/or other countries. ON Semiconductor owns the rights to a number of patents, trademarks, copyrights, trade secrets, and other intellectual property. A listing of ON Semiconductor's product/patent coverage may be accessed at www.onsemi.com/site/pdf/Patent-Marking.pdf. ON Semiconductor reserves the right to make changes without further notice to any products herein. ON Semiconductor makes no warranty, representation or guarantee regarding the suitability of its products for any particular purpose, nor does ON Semiconductor assume any liability arising out of the application or use of any product or circuit, and specifically disclaims any and all liability, including without limitation special, consequential or incidental damages. Buyer is responsible for its products and applications using ON Semiconductor products, including compliance with all laws, regulations and safety requirements or standards, regardless of any support or applications information provided by ON Semiconductor. "Typical" parameters which may be provided in ON Semiconductor data sheets and/or specifications can and do vary in different applications and actual performance may vary over time. All operating parameters, including "Typicals" must be validated for each customer application by customer's technical experts. ON Semiconductor does not convey any license under its patent rights nor the rights of others. ON Semiconductor products are not designed, intended, or authorized for use as a critical component in life support systems or any FDA Class 3 medical devices or medical devices with a same or similar classification in a foreign jurisdiction or any devices intended for implantation in the human body. Should Buyer purchase or use ON Semiconductor products for any such unintended or unauthorized application, Buyer shall indemnify and hold ON Semiconductor and its officers, employees, subsidiaries, affiliates, and distributors harmless against all claims, costs, damages, and expenses, and reasonable attorney fees arising out of, directly or indirectly, any claim of personal injury or death associated with such unintended or unauthorized use, even if such claim alleges that ON Semiconductor was negligent regarding the design or manufacture of the part. ON Semiconductor is an Equal Opportunity/Affirmative Action Employer. This literature is subject to all applicable copyright laws and is not for resale in any manner.

FAIRCHILD SEMICONDUCTOR™

October 1987
Revised April 2001

MM74C922 • MM74C923
16-Key Encoder • 20-Key Encoder

General Description

The MM74C922 and MM74C923 CMOS key encoders provide all the necessary logic to fully encode an array of SPST switches. The keyboard scan can be implemented by either an external clock or external capacitor. These encoders also have on-chip pull-up devices which permit switches with up to 50 kΩ on resistance to be used. No diodes in the switch array are needed to eliminate ghost switches. The internal debounce circuit needs only a single external capacitor and can be defeated by omitting the capacitor. A Data Available output goes to a high level when a valid keyboard entry has been made. The Data Available output returns to a low level when the entered key is released, even if another key is depressed. The Data Available will return high to indicate acceptance of the new key after a normal debounce period; this two-key roll-over is provided between any two switches.

An internal register remembers the last key pressed even after the key is released. The 3-STATE outputs provide for easy expansion and bus operation and are LPTTL compatible.

Features

- 50 kΩ maximum switch on resistance
- On or off chip clock
- On-chip row pull-up devices
- 2 key roll-over
- Keybounce elimination with single capacitor
- Last key register at outputs
- 3-STATE output LPTTL compatible
- Wide supply range: 3V to 15V
- Low power consumption

Ordering Code:

Order Number	Package Number	Package Description
MM74C922WM	M20B	20-Lead Small Outline Integrated Circuit (SOIC), JEDEC MS-013, 0.300" Wide
MM74C922N	N18B	18-Lead Plastic Dual-In-Line Package (PDIP), JEDEC MS-001, 0.300" Wide
MM74C923WM	M20B	20-Lead Small Outline Integrated Circuit (SOIC), JEDEC MS-013, 0.300" Wide
MM74C923N	N20A	20-Lead Plastic Dual-In-Line Package (PDIP), JEDEC MS-001, 0.300 Wide

Device also available in Tape and Reel. Specify by appending suffix letter "X" to the ordering code.

Connection Diagrams

Pin Assignment for DIP

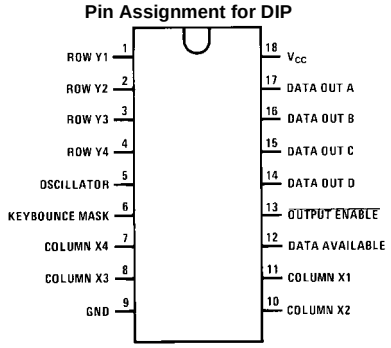

Top View
MM74C922

Pin Assignment for SOIC

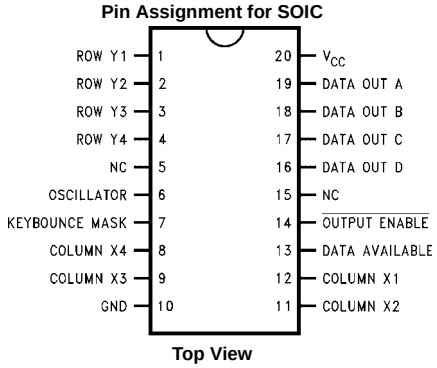

Top View
MM74C922

© 2001 Fairchild Semiconductor Corporation

Connection Diagrams (Continued)

Pin Assignment for DIP and SOIC Package

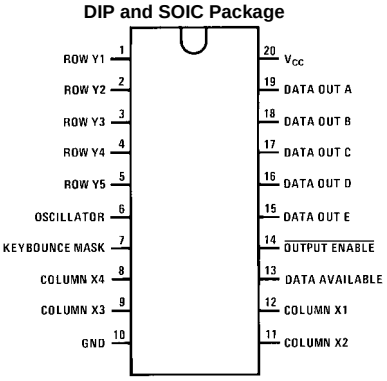

Top View
MM74C923

Truth Tables

(Pins 0 through 11)

Switch Position		0 Y1, X1	1 Y1, X2	2 Y1, X3	3 Y1, X4	4 Y2, X1	5 Y2, X2	6 Y2, X3	7 Y2, X4	8 Y3, X1	9 Y3, X2	10 Y3, X3	11 Y3, X4
DATA	A	0	1	0	1	0	1	0	1	0	1	0	1
	B	0	0	1	1	0	0	1	1	0	0	1	1
	C	0	0	0	0	1	1	1	1	0	0	0	0
	D	0	0	0	0	0	0	0	0	1	1	1	1
	E (Note 1)	0	0	0	0	0	0	0	0	0	0	0	0

(Pins 12 through 19)

Switch Position		12 Y4, X1	13 Y4, X2	14 Y4, X3	15 Y4, X4	16 Y5(Note 1), X1	17 Y5 (Note 1), X2	18 Y5 (Note 1), X3	19 Y5 (Note 1), X4
DATA	A	0	1	0	1	0	1	0	1
	B	0	0	1	1	0	0	1	1
	C	1	1	1	1	0	0	0	0
	D	1	1	1	1	0	0	0	0
	E (Note 1)	0	0	0	0	1	1	1	1

Note 1: Omit for MM74C922

Block Diagram

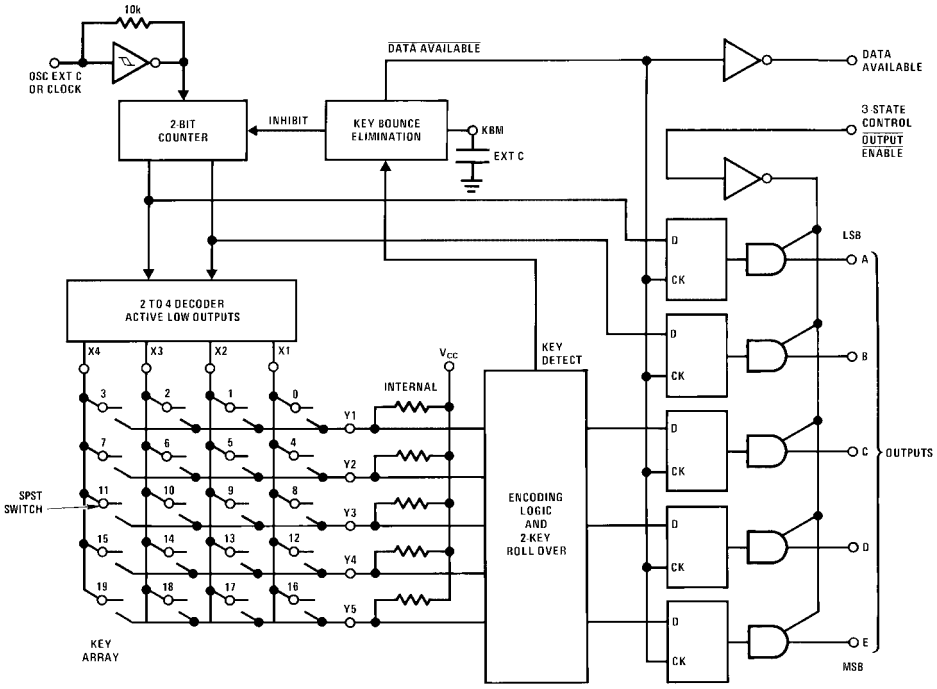

Absolute Maximum Ratings(Note 2)

Voltage at Any Pin	V_{CC} − 0.3V to V_{CC} + 0.3V
Operating Temperature Range	
MM74C922, MM74C923	−40°C to +85°C
Storage Temperature Range	−65°C to +150°C
Power Dissipation (P_D)	
Dual-In-Line	700 mW
Small Outline	500 mW
Operating V_{CC} Range	3V to 15V
V_{CC}	18V
Lead Temperature	
(Soldering, 10 seconds)	260°C

Note 2: "Absolute Maximum Ratings" are those values beyond which the safety of the device cannot be guaranteed. Except for "Operating Temperature Range" they are not meant to imply that the devices should be operated at these limits. The table of "Electrical Characteristics" provides conditions for actual device operation.

DC Electrical Characteristics

Min/Max limits apply across temperature range unless otherwise specified

Symbol	Parameter	Conditions	Min	Typ	Max	Units
CMOS TO CMOS						
V_{T+}	Positive-Going Threshold Voltage	V_{CC} = 5V, $I_{IN} \geq$ 0.7 mA	3.0	3.6	4.3	V
	at Osc and KBM Inputs	V_{CC} = 10V, $I_{IN} \geq$ 1.4 mA	6.0	6.8	8.6	V
		V_{CC} = 15V, $I_{IN} \geq$ 2.1 mA	9.0	10	12.9	V
V_{T-}	Negative-Going Threshold Voltage	V_{CC} = 5V, $I_{IN} \geq$ 0.7 mA	0.7	1.4	2.0	V
	at Osc and KBM Inputs	V_{CC} = 10V, $I_{IN} \geq$ 1.4 mA	1.4	3.2	4.0	V
		V_{CC} = 15V, $I_{IN} \geq$ 2.1 mA	2.1	5	6.0	V
$V_{IN(1)}$	Logical "1" Input Voltage,	V_{CC} = 5V	3.5	4.5		V
	Except Osc and KBM Inputs	V_{CC} = 10V	8.0	9		V
		V_{CC} = 15V	12.5	13.5		V
$V_{IN(0)}$	Logical "0" Input Voltage,	V_{CC} = 5V		0.5	1.5	V
	Except Osc and KBM Inputs	V_{CC} = 10V		1	2	V
		V_{CC} = 15V		1.5	2.5	V
I_{rp}	Row Pull-Up Current at Y1, Y2,	V_{CC} = 5V, V_{IN} = 0.1 V_{CC}		−2	−5	µA
	Y3, Y4 and Y5 Inputs	V_{CC} = 10V		−10	−20	µA
		V_{CC} = 15V		−22	−45	µA
$V_{OUT(1)}$	Logical "1" Output Voltage	V_{CC} = 5V, I_O = −10 µA	4.5			V
		V_{CC} = 10V, I_O = −10 µA	9			V
		V_{CC} = 15V, I_O = −10 µA	13.5			V
$V_{OUT(0)}$	Logical "0" Output Voltage	V_{CC} = 5V, I_O = 10 µA			0.5	V
		V_{CC} = 10V, I_O = 10 µA			1	V
		V_{CC} = 15V, I_O = 10 µA			1.5	V
R_{on}	Column "ON" Resistance at	V_{CC} = 5V, V_O = 0.5V		500	1400	Ω
	X1, X2, X3 and X4 Outputs	V_{CC} = 10V, V_O = 1V		300	700	Ω
		V_{CC} = 15V, V_O = 1.5V		200	500	Ω
I_{CC}	Supply Current	V_{CC} = 5V		0.55	1.1	mA
	Osc at 0V, (one Y low)	V_{CC} = 10V		1.1	1.9	mA
		V_{CC} = 15V		1.7	2.6	mA
$I_{IN(1)}$	Logical "1" Input Current	V_{CC} = 15V, V_{IN} = 15V		0.005	1.0	µA
	at $\overline{\text{Output Enable}}$					
$I_{IN(0)}$	Logical "0" Input Current	V_{CC} = 15V, V_{IN} = 0V	−1.0	−0.005		µA
	at $\overline{\text{Output Enable}}$					
CMOS/LPTTL INTERFACE						
$V_{IN(1)}$	Except Osc and KBM Inputs	V_{CC} = 4.75V	V_{CC} − 1.5			V
$V_{IN(0)}$	Except Osc and KBM Inputs	V_{CC} = 4.75V			0.8	V
$V_{OUT(1)}$	Logical "1" Output Voltage	I_O = −360 µA				
		V_{CC} = 4.75V	2.4			V
		I_O = −360 µA				

DC Electrical Characteristics (Continued)

Symbol	Parameter	Conditions	Min	Typ	Max	Units
$V_{OUT(0)}$	Logical "0" Output Voltage	$I_O = -360\ \mu A$ $V_{CC} = 4.75V$ $I_O = -360\ \mu A$			0.4	V
OUTPUT DRIVE (See Family Characteristics Data Sheet) (Short Circuit Current)						
I_{SOURCE}	Output Source Current (P-Channel)	$V_{CC} = 5V$, $V_{OUT} = 0V$, $T_A = 25°C$	−1.75	−3.3		mA
I_{SOURCE}	Output Source Current (P-Channel)	$V_{CC} = 10V$, $V_{OUT} = 0V$, $T_A = 25°C$	−8	−15		mA
I_{SINK}	Output Sink Current (N-Channel)	$V_{CC} = 5V$, $V_{OUT} = V_{CC}$, $T_A = 25°C$	1.75	3.6		mA
I_{SINK}	Output Sink Current (N-Channel)	$V_{CC} = 10V$, $V_{OUT} = V_{CC}$, $T_A = 25°C$	8	16		mA

AC Electrical Characteristics (Note 3)

$T_A = 25°C$, $C_L = 50$ pF, unless otherwise noted

Symbol	Parameter	Conditions	Min	Typ	Max	Units
t_{pd0}, t_{pd1}	Propagation Delay Time to	$C_L = 50$ pF (Figure 1)				
	Logical "0" or Logical "1"	$V_{CC} = 5V$		60	150	ns
	from D.A.	$V_{CC} = 10V$		35	80	ns
		$V_{CC} = 15V$		25	60	ns
t_{0H}, t_{1H}	Propagation Delay Time from	$R_L = 10k$, $C_L = 10$ pF (Figure 2)				
	Logical "0" or Logical "1"	$V_{CC} = 5V$, $R_L = 10k$		80	200	ns
	into High Impedance State	$V_{CC} = 10V$, $C_L = 10$ pF		65	150	ns
		$V_{CC} = 15V$		50	110	ns
t_{H0}, t_{H1}	Propagation Delay Time from	$R_L = 10k$, $C_L = 50$ pF (Figure 2)				
	High Impedance State to a	$V_{CC} = 5V$, $R_L = 10k$		100	250	ns
	Logical "0" or Logical "1"	$V_{CC} = 10V$, $C_L = 50$ pF		55	125	ns
		$V_{CC} = 15V$		40	90	ns
C_{IN}	Input Capacitance	Any Input (Note 4)		5	7.5	pF
C_{OUT}	3-STATE Output Capacitance	Any Output (Note 4)		10		pF

Note 3: AC Parameters are guaranteed by DC correlated testing.

Note 4: Capacitance is guaranteed by periodic testing.

Switching Time Waveforms

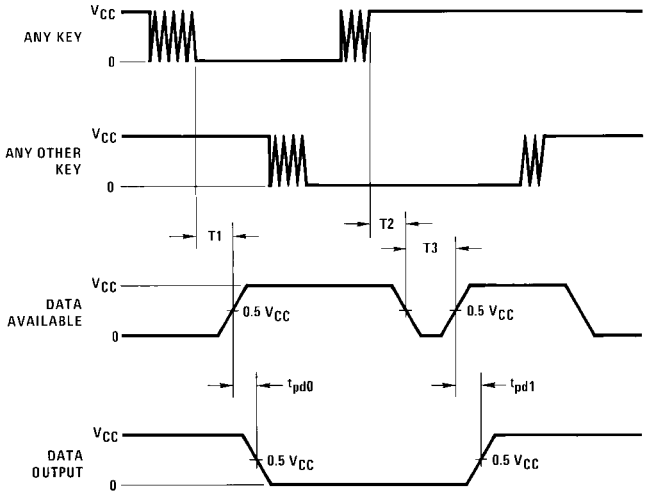

T1 ≈ T2 ≈ RC, T3 ≈ 0.7 RC, where R ≈ 10k and C is external capacitor at KBM input.

FIGURE 1.

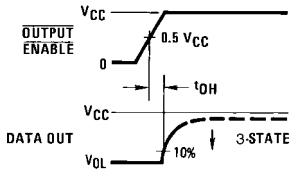

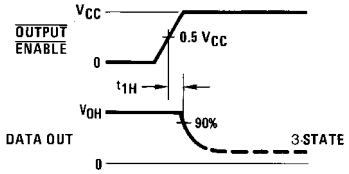

FIGURE 2.

Typical Performance Characteristics

Typical I_{rp} vs V_{IN} at Any Y Input

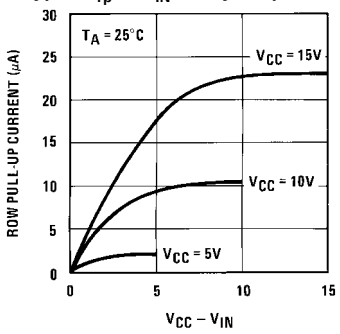

Typical R_{on} vs V_{OUT} at Any X Output

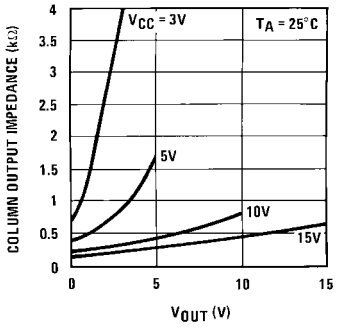

Typical F_{SCAN} vs C_{OSC}

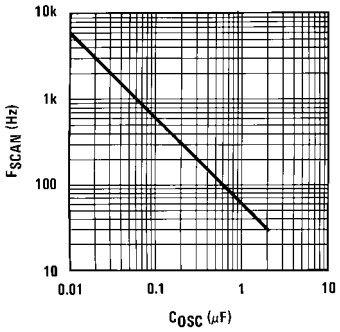

Typical Debounce Period vs C_{KBM}

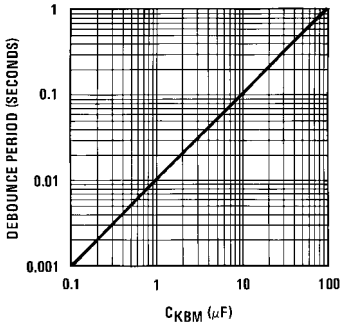

Typical Applications

Synchronous Handshake (MM74C922)

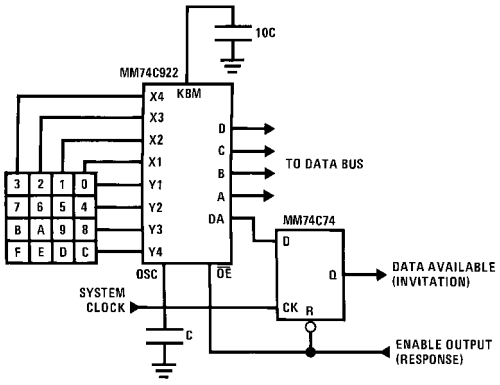

The keyboard may be synchronously scanned by omitting the capacitor at osc. and driving osc. directly if the system clock rate is lower than 10 kHz

Synchronous Data Entry Onto Bus (MM74C922)

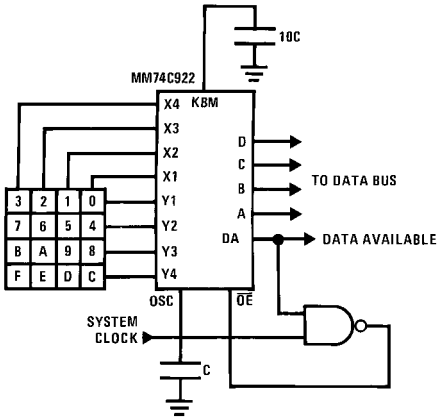

Outputs are enabled when valid entry is made and go into 3-STATE when key is released.

The keyboard may be synchronously scanned by omitting the capacitor at osc. and driving osc. directly if the system clock rate is lower than 10 kHz

Asynchronous Data Entry Onto Bus (MM74C922)

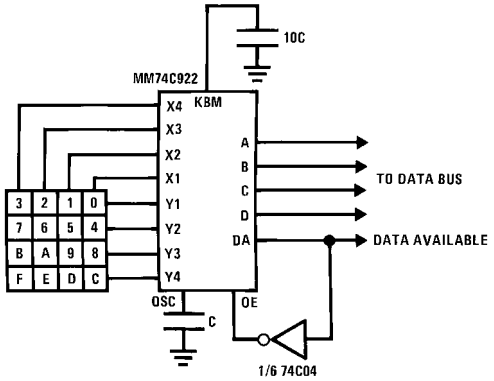

Outputs are in 3-STATE until key is pressed, then data is placed on bus. When key is released, outputs return to 3-STATE.

Expansion to 32 Key Encoder (MM74C922)

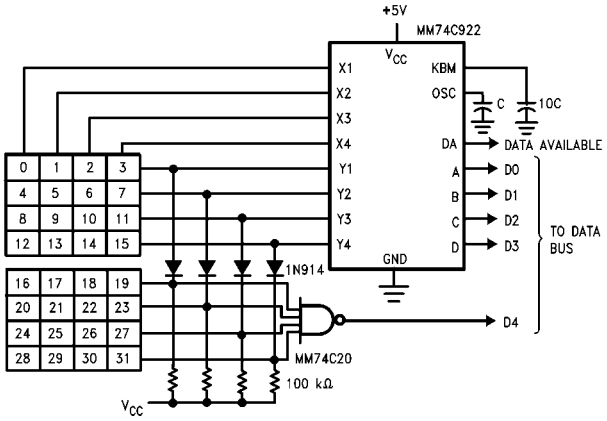

Theory of Operation

The MM74C922/MM74C923 Keyboard Encoders implement all the logic necessary to interface a 16 or 20 SPST key switch matrix to a digital system. The encoder will convert a key switch closer to a 4(MM74C922) or 5(MM74C923) bit nibble. The designer can control both the keyboard scan rate and the key debounce period by altering the oscillator capacitor, C_{OSE}, and the key bounce mask capacitor, C_{MSK}. Thus, the MM74C922/MM74C923's performance can be optimized for many keyboards.

The keyboard encoders connect to a switch matrix that is 4 rows by 4 columns (MM74C922) or 5 rows by 4 columns (MM74C923). When no keys are depressed, the row inputs are pulled high by internal pull-ups and the column outputs sequentially output a logic "0". These outputs are open drain and are therefore low for 25% of the time and otherwise off. The column scan rate is controlled by the oscillator input, which consists of a Schmitt trigger oscillator, a 2-bit counter, and a 2–4-bit decoder.

When a key is depressed, key 0, for example, nothing will happen when the X1 input is off, since Y1 will remain high. When the X1 column is scanned, X1 goes low and Y1 will go low. This disables the counter and keeps X1 low. Y1 going low also initiates the key bounce circuit timing and locks out the other Y inputs. The key code to be output is a combination of the frozen counter value and the decoded Y inputs. Once the key bounce circuit times out, the data is latched, and the Data Available (DAV) output goes high.

If, during the key closure the switch bounces, Y1 input will go high again, restarting the scan and resetting the key bounce circuitry. The key may bounce several times, but as soon as the switch stays low for a debounce period, the closure is assumed valid and the data is latched.

A key may also bounce when it is released. To ensure that the encoder does not recognize this bounce as another key closure, the debounce circuit must time out before another closure is recognized.

The two-key roll-over feature can be illustrated by assuming a key is depressed, and then a second key is depressed. Since all scanning has stopped, and all other Y inputs are disabled, the second key is not recognized until the first key is lifted and the key bounce circuitry has reset.

The output latches feed 3-STATE, which is enabled when the Output Enable ($\overline{OE}$) input is taken low.

Physical Dimensions inches (millimeters) unless otherwise noted

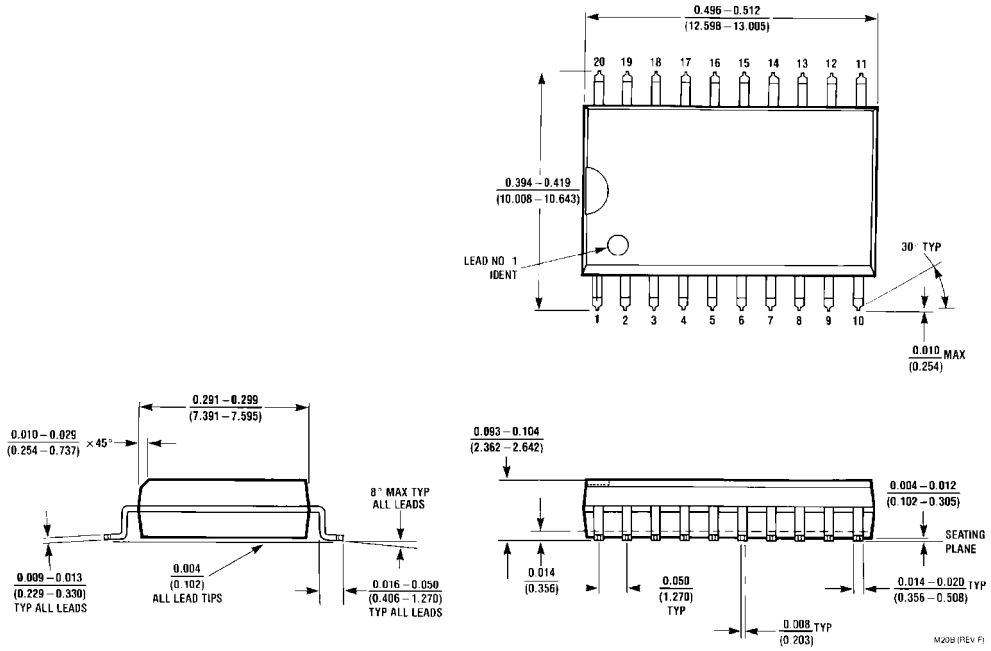

20-Lead Small Outline Integrated Circuit (SOIC), JEDEC MS-013, 0.300" Wide
Package Number M20B

Physical Dimensions inches (millimeters) unless otherwise noted (Continued)

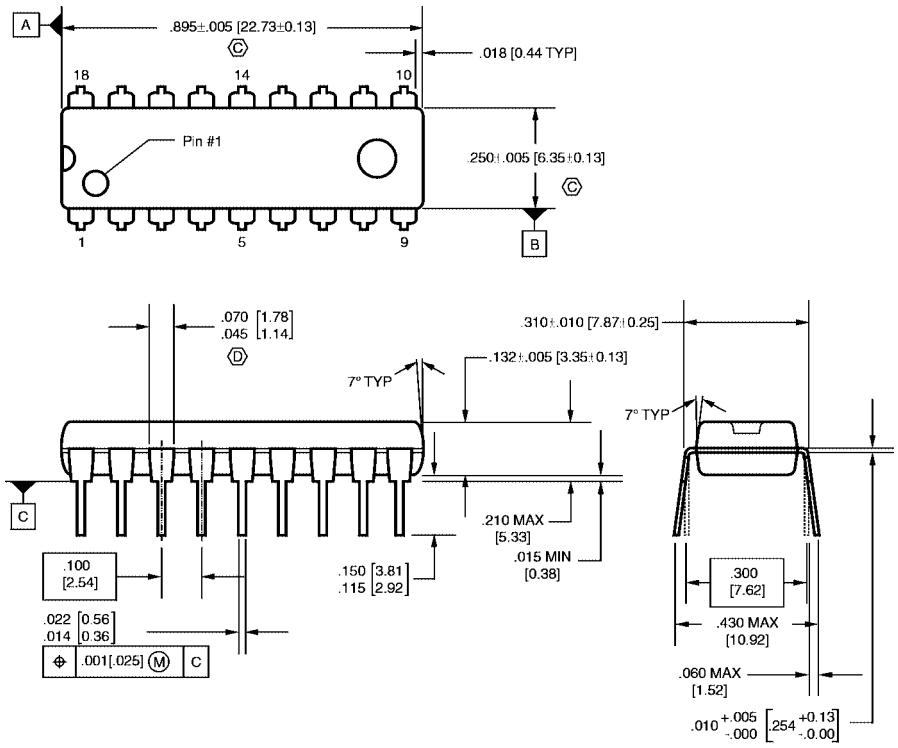

NOTES:

A. CONFORMS TO JEDEC REGISTRATION MS-001, VARIATIONS AC, DATED 6/1993.

B. CONTROLLING DIMENSIONS ARE IN INCHES REFERENCE DIMENSIONS ARE IN MILLIMETERS.

C. DOES NOT INCLUDE MOLD FLASH OR PROTRUSIONS. MOLD FLASH OR PROTRUSIONS SHALL NOT EXCEED .010 INCHES OR 0.25MM.

D. DOES NOT INCLUDE DAMBAR PROTRUSIONS. DAMBAR PROTRUSIONS SHALL NOT EXCEED .010 INCHES OR 0.25MM.

E. DIMENSIONING AND TOLERANCING PER ASME Y14.5M-1994.

N18BrevA

18-Lead Plastic Dual-In-Line Package (PDIP), JEDEC MS-001, 0.300" Wide
Package Number N18B

Physical Dimensions inches (millimeters) unless otherwise noted (Continued)

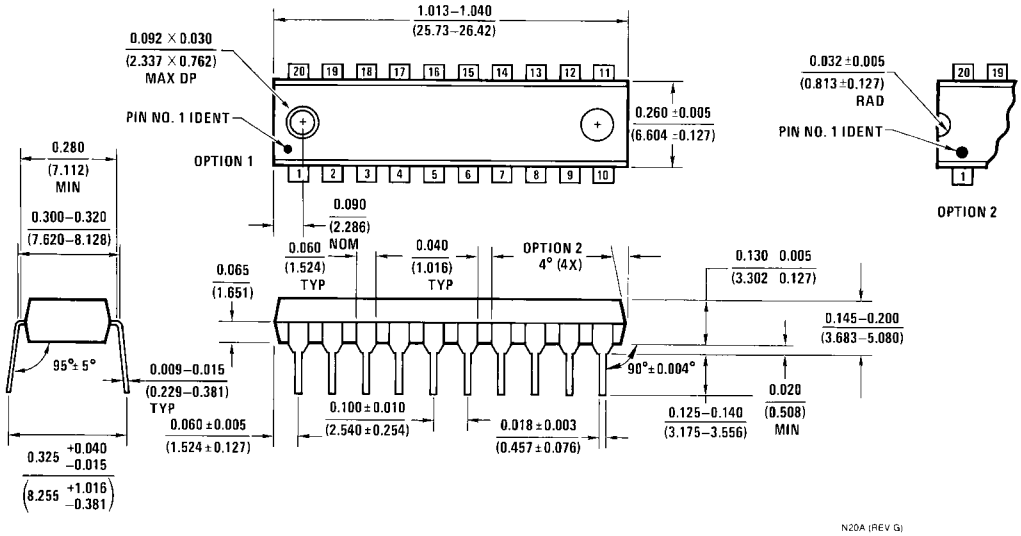

20-Lead Plastic Dual-In-Line Package (PDIP), JEDEC MS-001, 0.300 Wide
Package Number N20A

Fairchild does not assume any responsibility for use of any circuitry described, no circuit patent licenses are implied and Fairchild reserves the right at any time without notice to change said circuitry and specifications.

LIFE SUPPORT POLICY

FAIRCHILD'S PRODUCTS ARE NOT AUTHORIZED FOR USE AS CRITICAL COMPONENTS IN LIFE SUPPORT DEVICES OR SYSTEMS WITHOUT THE EXPRESS WRITTEN APPROVAL OF THE PRESIDENT OF FAIRCHILD SEMICONDUCTOR CORPORATION. As used herein:

1. Life support devices or systems are devices or systems which, (a) are intended for surgical implant into the body, or (b) support or sustain life, and (c) whose failure to perform when properly used in accordance with instructions for use provided in the labeling, can be reasonably expected to result in a significant injury to the user.
2. A critical component in any component of a life support device or system whose failure to perform can be reasonably expected to cause the failure of the life support device or system, or to affect its safety or effectiveness.

www.fairchildsemi.com

ON Semiconductor and ON are trademarks of Semiconductor Components Industries, LLC dba ON Semiconductor or its subsidiaries in the United States and/or other countries. ON Semiconductor owns the rights to a number of patents, trademarks, copyrights, trade secrets, and other intellectual property. A listing of ON Semiconductor's product/patent coverage may be accessed at www.onsemi.com/site/pdf/Patent−Marking.pdf. ON Semiconductor reserves the right to make changes without further notice to any products herein. ON Semiconductor makes no warranty, representation or guarantee regarding the suitability of its products for any particular purpose, nor does ON Semiconductor assume any liability arising out of the application or use of any product or circuit, and specifically disclaims any and all liability, including without limitation special, consequential or incidental damages. Buyer is responsible for its products and applications using ON Semiconductor products, including compliance with all laws, regulations and safety requirements or standards, regardless of any support or applications information provided by ON Semiconductor. "Typical" parameters which may be provided in ON Semiconductor data sheets and/or specifications can and do vary in different applications and actual performance may vary over time. All operating parameters, including "Typicals" must be validated for each customer application by customer's technical experts. ON Semiconductor does not convey any license under its patent rights nor the rights of others. ON Semiconductor products are not designed, intended, or authorized for use as a critical component in life support systems or any FDA Class 3 medical devices or medical devices with a same or similar classification in a foreign jurisdiction or any devices intended for implantation in the human body. Should Buyer purchase or use ON Semiconductor products for any such unintended or unauthorized application, Buyer shall indemnify and hold ON Semiconductor and its officers, employees, subsidiaries, affiliates, and distributors harmless against all claims, costs, damages, and expenses, and reasonable attorney fees arising out of, directly or indirectly, any claim of personal injury or death associated with such unintended or unauthorized use, even if such claim alleges that ON Semiconductor was negligent regarding the design or manufacture of the part. ON Semiconductor is an Equal Opportunity/Affirmative Action Employer. This literature is subject to all applicable copyright laws and is not for resale in any manner.

PUBLICATION ORDERING INFORMATION

LITERATURE FULFILLMENT:
Literature Distribution Center for ON Semiconductor
19521 E. 32nd Pkwy, Aurora, Colorado 80011 USA
Phone: 303−675−2175 or 800−344−3860 Toll Free USA/Canada
Fax: 303−675−2176 or 800−344−3867 Toll Free USA/Canada
Email: orderlit@onsemi.com

N. American Technical Support: 800−282−9855 Toll Free USA/Canada
Europe, Middle East and Africa Technical Support:
Phone: 421 33 790 2910
Japan Customer Focus Center
Phone: 81−3−5817−1050

ON Semiconductor Website: **www.onsemi.com**

Order Literature: http://www.onsemi.com/orderlit

For additional information, please contact your local Sales Representative