FAIRCHILD™

Is Now Part of

ON Semiconductor®

To learn more about ON Semiconductor, please visit our website at
www.onsemi.com

ON Semiconductor and the ON Semiconductor logo are trademarks of Semiconductor Components Industries, LLC dba ON Semiconductor or its subsidiaries in the United States and/or other countries. ON Semiconductor owns the rights to a number of patents, trademarks, copyrights, trade secrets, and other intellectual property. A listing of ON Semiconductor's product/patent coverage may be accessed at www.onsemi.com/site/pdf/Patent-Marking.pdf. ON Semiconductor reserves the right to make changes without further notice to any products herein. ON Semiconductor makes no warranty, representation or guarantee regarding the suitability of its products for any particular purpose, nor does ON Semiconductor assume any liability arising out of the application or use of any product or circuit, and specifically disclaims any and all liability, including without limitation special, consequential or incidental damages. Buyer is responsible for its products and applications using ON Semiconductor products, including compliance with all laws, regulations and safety requirements or standards, regardless of any support or applications information provided by ON Semiconductor. "Typical" parameters which may be provided in ON Semiconductor data sheets and/or specifications can and do vary in different applications and actual performance may vary over time. All operating parameters, including "Typicals" must be validated for each customer application by customer's technical experts. ON Semiconductor does not convey any license under its patent rights nor the rights of others. ON Semiconductor products are not designed, intended, or authorized for use as a critical component in life support systems or any FDA Class 3 medical devices or medical devices with a same or similar classification in a foreign jurisdiction or any devices intended for implantation in the human body. Should Buyer purchase or use ON Semiconductor products for any such unintended or unauthorized application, Buyer shall indemnify and hold ON Semiconductor and its officers, employees, subsidiaries, affiliates, and distributors harmless against all claims, costs, damages, and expenses, and reasonable attorney fees arising out of, directly or indirectly, any claim of personal injury or death associated with such unintended or unauthorized use, even if such claim alleges that ON Semiconductor was negligent regarding the design or manufacture of the part. ON Semiconductor is an Equal Opportunity/Affirmative Action Employer. This literature is subject to all applicable copyright laws and is not for resale in any manner.

FAIRCHILD SEMICONDUCTOR®

February 2011

NC7SP17
TinyLogic® ULP Single Buffer with Schmitt Trigger Input

Features

- 0.9V to 3.6V V_{CC} Supply Operation
- 3.6V Over-Voltage Tolerant I/Os at V_{CC} from 0.9V to 3.6V
- Propagation Delay (t_{PD}):
  - 4.0ns Typical for 3.0V to 3.6V V_{CC}
  - 5.0ns Typical for 2.3V to 2.7V V_{CC}
  - 6.0ns Typical for 1.65V to 1.95V V_{CC}
  - 7.0ns Typical for 1.40V to 1.60V V_{CC}
  - 11.0ns Typical for 1.10V to 1.30V V_{CC}
  - 27.0ns Typical for 0.90V V_{CC}
- Power-Off High-Impedance Inputs and Outputs
- Static Drive (I_{OH}/I_{OL}):
  - ± 2.6mA at 3.00V V_{CC}
  - ± 2.1mA at 2.30V V_{CC}
  - ± 1.5mA at 1.65V V_{CC}
  - ± 1.0mA at 1.40V V_{CC}
  - ± 0.5mA at 1.10V V_{CC}
  - ± 20µA at 0.9V V_{CC}
- Quiet Series™ Noise / EMI Reduction Circuitry
- Ultra Small MicroPak™ Packages
- Ultra Low Dynamic Power

Description

The NC7SP17 is a single buffer with Schmitt trigger input from Fairchild's Ultra Low Power (ULP) series of TinyLogic®. Ideal for applications where battery life is critical, this product is designed for ultra low power consumption within the V_{CC} operating range of 0.9V to 3.6V V_{CC}.

The internal circuit is composed of a minimum of inverter stages, including the output buffer, to enable ultra low static and dynamic power.

The NC7SP17, for lower drive requirements, is uniquely designed for optimized power and speed and is fabricated with an advanced CMOS technology to achieve best-in-class speed of operation, while maintaining extremely low CMOS power dissipation.

Ordering Information

Part Number	Top Mark	Package	Packing Method
NC7SP17P5X	P17	5-Lead SC70, EIAJ SC-88a, 1.25mm Wide	3000 Units on Tape & Reel
NC7SP17L6X	K4	6-Lead MicroPak™, 1.00mm Wide	5000 Units on Tape & Reel
NC7SP17FHX	K4	6-Lead, MicroPak2™, 1x1mm Body, .35mm Pitch	5000 Units on Tape & Reel

© 2001 Fairchild Semiconductor Corporation

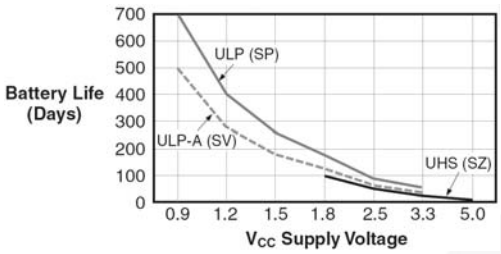

Notes:

1. TinyLogic ULP and ULP-A with up to 50% less power consumption can extend battery life significantly.
2. Battery Life=($V_{battery}$ x $I_{battery}$ x 0.9) / (P_{device}) / 24hrs/day; where, P_{device}=(I_{CC} x V_{CC}) + (C_{PD} + C_L) x V_{CC}^2 x f.
3. Assumes ideal 3.6V Lithium Ion battery with current rating of 900mAH and derated 90% and device frequency at 10MHz, with C_L=15pF load.

Figure 1. Battery Life vs. V_{CC} Supply Voltage

Connection Diagrams

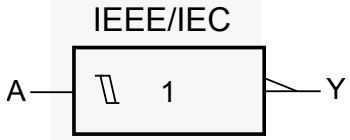

Figure 2. Logic Symbol

Pin Configurations

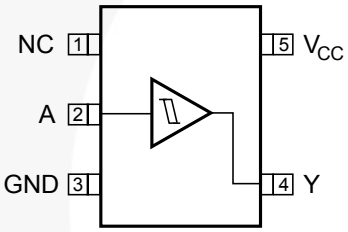

Figure 3. SC70 (Top View)

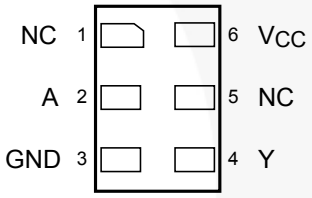

Figure 4. MicroPak™ (Top Through View)

Function Table

Y=A

Input	Output
A	**Y**
L	L
H	H

L = Low Logic Level
H = High Logic Level

Pin Definitions

Pin # SC70	Pin # MicroPak	Name	Description
1	1, 5	NC	No Connect
2	2	A	Input
3	3	GND	Ground
4	4	Y	Output
5	6	V_{CC}	Supply Voltage

© 2001 Fairchild Semiconductor Corporation

Absolute Maximum Ratings

Stresses exceeding the absolute maximum ratings may damage the device. The device may not function or be operable above the recommended operating conditions and stressing the parts to these levels is not recommended. In addition, extended exposure to stresses above the recommended operating conditions may affect device reliability. The absolute maximum ratings are stress ratings only.

Symbol	Parameter		Min.	Max.	Unit
V_{CC}	Supply Voltage		-0.5	4.6	V
V_{IN}	DC Input Voltage		-0.5	4.6	V
V_{OUT}	DC Output Voltage	HIGH or LOW State(4)	-0.5	V_{CC} to +0.5	V
		V_{CC}=0V	-0.5	4.6	V
I_{IK}	DC Input Diode Current at V_{IN} < 0V			-50	mA
I_{OK}	DC Output Diode Current	V_{OUT} < 0V		-50	mA
		V_{OUT} > V_{CC}		+50	
I_{OH} / I_{OL}	DC Output Source/Sink Current			±50	mA
I_{CC} or Ground	DC V_{CC} or Ground Current per Supply Pin			±50	mA
T_{STG}	Storage Temperature Range		-65	+150	°C
T_J	Junction Temperature Under Bias			+150	°C
T_L	Junction Lead Temperature (Soldering, 10 Seconds)			+260	°C
P_D	Power Dissipation at +85°C	SC70-5		150	mW
		MicroPak™-6		130	
		MicroPak2™-6		120	
ESD	Human Body Model	JEDEC: JESD22-A114		4000	V
	Charged Device Model	JEDEC: JESD22-C101		2000	

Note:
4. The I_O maximum rating must be observed.

Recommended Operating Conditions

The Recommended Operating Conditions table defines the conditions for actual device operation. Recommended operating conditions are specified to ensure optimal performance to the datasheet specifications. Fairchild does not recommend exceeding them or designing to Absolute Maximum Ratings.

Symbol	Parameter	Conditions	Min.	Typ.	Max.	Unit
V_{CC}	Supply Voltage		0.9		3.6	V
V_{IN}	Input Voltage(5)		0		3.6	V
V_{OUT}	Output Voltage	HIGH or LOW State	0		V_{CC}	V
		V_{CC}=0V	0		3.6	
I_{OH} / I_{OL}	Output Current in I_{OH} / I_{OL}	V_{CC}=3.0V to 3.6V		±2.6		mA
		V_{CC}=2.3V to 2.7V		±2.1		
		V_{CC}=1.65V to 1.95V		±1.5		
		V_{CC}=1.40V to 1.60V		±1.0		
		V_{CC}=1.10V to 1.30V		±0.5		
		V_{CC}=0.9V		20.0		µA
T_A	Free Air Operating Temperature		-40		+85	°C
Δt / ΔV	Minimum Input Edge Rate	V_{IN}=0.8V to 2.0V, V_{CC}=3.0V		10		ns/V
θ_{JA}	Thermal Resistance	SC70-5		425		°C/W
		MicroPak™-6		500		
		MicroPak2™-6		560		

Note:
5. Unused inputs must be held HIGH or LOW. They may not float.

© 2001 Fairchild Semiconductor Corporation

DC Electrical Characteristics

Symbol	Parameter	Conditions	V_{CC} (V)	T_A=+25°C		T_A=–40°C to +85°C		Units
				Min.	Max.	Min.	Max.	
V_P	Positive Threshold Voltage		0.90	0.30	0.60	0.30	0.60	V
			1.10	0.40	1.00	0.40	1.00	
			1.40	0.50	1.20	0.50	1.20	
			1.65	0.70	1.50	0.70	1.50	
			2.30	1.00	1.90	1.00	1.90	
			3.00	1.50	2.60	1.50	2.60	
V_N	Negative Threshold Voltage		0.90	0.10	0.60	0.10	0.60	V
			1.10	0.15	0.70	0.15	0.70	
			1.40	0.20	0.80	0.20	0.80	
			1.65	0.25	0.90	0.25	0.90	
			2.30	0.40	1.15	0.40	1.15	
			3.00	0.6	1.50	0.60	1.50	
V_H	Hysteresis Voltage		0.90	0.07	0.50	0.07	0.50	V
			1.10	0.08	0.60	0.08	0.60	
			1.40	0.09	0.80	0.09	0.80	
			1.65	0.10	1.00	0.10	1.00	
			2.30	0.25	1.10	0.25	1.10	
			3.00	0.60	1.80	0.60	1.80	
V_{OH}	HIGH Level Output Voltage	I_{OH}=–20µA	0.90	V_{CC} – 0.1		V_{CC} – 0.1		V
			$1.10 \le V_{CC} \le 1.30$	V_{CC} – 0.1		V_{CC} – 0.1		
			$1.40 \le V_{CC} \le 1.60$	V_{CC} – 0.1		V_{CC} – 0.1		
			$1.65 \le V_{CC} \le 1.95$	V_{CC} – 0.1		V_{CC} – 0.1		
			$2.30 \le V_{CC} \le 2.70$	V_{CC} – 0.1		V_{CC} – 0.1		
			$3.00 \le V_{CC} \le 3.60$	V_{CC} – 0.1		V_{CC} – 0.1		
		I_{OH}=–0.5mA	$1.10 \le V_{CC} \le 1.30$	0.75 x V_{CC}		0.70 x V_{CC}		
		I_{OH}=–1mA	$1.40 \le V_{CC} \le 1.60$	1.07		0.99		
		I_{OH}=–1.5mA	$1.65 \le V_{CC} \le 1.95$	1.24		1.22		
		I_{OH}=–2.1mA	$2.30 \le V_{CC} \le 2.70$	1.95		1.87		
		I_{OH}=–2.6mA	$3.00 \le V_{CC} \le 3.60$	2.61		2.55		
V_{OL}	LOW Level Output Voltage	I_{OL}=20µA	0.90		0.1		0.1	V
			$1.10 \le V_{CC} \le 1.30$		0.1		0.1	
			$1.40 \le V_{CC} \le 1.60$		0.1		0.1	
			$1.65 \le V_{CC} \le 1.95$		0.1		0.1	
			$2.30 \le V_{CC} \le 2.70$		0.1		0.1	
			$3.00 \le V_{CC} \le 3.60$		0.1		0.1	
		I_{OL}=0.5mA	$1.10 \le V_{CC} \le 1.30$		0.30 x V_{CC}		0.30 x V_{CC}	
		I_{OL}=1mA	$1.40 \le V_{CC} \le 1.60$		0.31		0.37	
		I_{OL}=1.5mA	$1.65 \le V_{CC} \le 1.95$		0.31		0.35	
		I_{OL}=2.1mA	$2.30 \le V_{CC} \le 2.70$		0.31		0.33	
		I_{OL}=2.6mA	$3.00 \le V_{CC} \le 3.60$		0.31		0.33	
I_{IN}	Input Leakage Current	$0 \le V_{IN} \le 3.6V$	0.90 to 3.60		±0.1		±0.5	µA
I_{OFF}	Power Off Leakage Current	$0 \le (V_{IN}, V_O) \le 3.6V$	0		0.5		0.5	µA
I_{CC}	Quiescent Supply Current	V_{IN}=V_{CC} or GND	0.90 to 3.60		0.9		0.9	µA

AC Electrical Characteristics

Symbol	Parameter	Conditions	V_{CC}	T_A=25°C			T_A=-40 to 85°C		Units	Figure
				Min.	Typ.	Max.	Min.	Max.		
t_{PHL}, t_{PLH}	Propagation Delay	C_L=10pF, R_L=1MΩ	0.90		27.0				ns	Figure 5 Figure 6
			1.10 ≤ V_{CC} ≤ 1.30	3.5	11.0	21.8	3.0	34.3		
			1.40 ≤ V_{CC} ≤ 1.60	2.5	7.0	14.8	2.0	15.0		
			1.65 ≤ V_{CC} ≤ 1.95	2.0	6.0	12.0	1.5	12.2		
			2.30 ≤ V_{CC} ≤ 2.70	1.5	5.0	9.4	1.0	9.9		
			3.00 ≤ V_{CC} ≤ 3.60	1.0	4.0	8.3	1.0	9.0		
		C_L=15pF, R_L=1MΩ	0.90		30.0					
			1.10 ≤ V_{CC} ≤ 1.30	4.0	11.0	22.8	3.5	37.3		
			1.40 ≤ V_{CC} ≤ 1.60	3.0	8.0	15.5	2.5	16.5		
			1.65 ≤ V_{CC} ≤ 1.95	2.5	6.0	12.6	2.0	13.6		
			2.30 ≤ V_{CC} ≤ 2.70	2.0	5.0	9.9	1.5	10.8		
			3.00 ≤ V_{CC} ≤ 3.60	1.5	4.0	8.7	1.0	9.5		
		C_L=30pF, R_L=1MΩ	0.90		32.0					
			1.10 ≤ V_{CC} ≤ 1.30	5.0	13.0	25.9	4.0	46.3		
			1.40 ≤ V_{CC} ≤ 1.60	4.0	9.0	17.8	3.5	18.2		
			1.65 ≤ V_{CC} ≤ 1.95	3.0	7.0	14.4	2.0	15.9		
			2.30 ≤ V_{CC} ≤ 2.70	2.0	6.0	11.3	1.5	12.8		
			3.00 ≤ V_{CC} ≤ 3.60	1.5	5.0	9.2	1.0	10.7		
C_{IN}	Input Capacitance		0		2				pF	
C_{PD}	Power Dissipation Capacitance	V_{IN}=0V or V_{CC}, f=10MHz	0.90 to 3.60		8				pF	

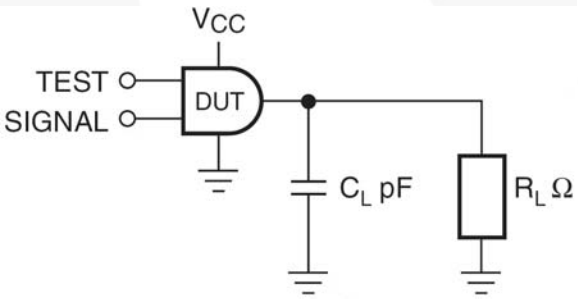

Figure 5. AC Test Circuit

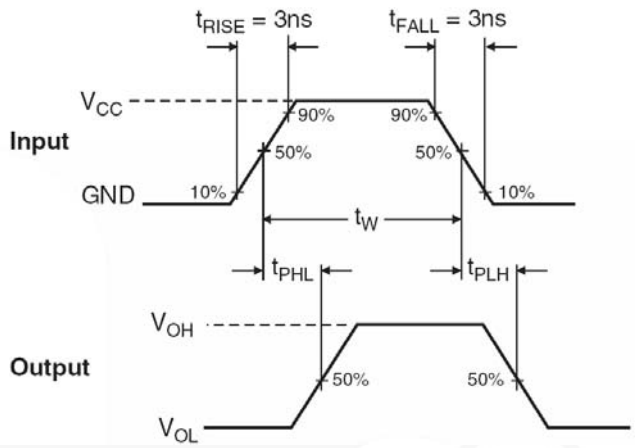

Figure 6. AC Waveforms for Inverting and Non-Inverting Functions

Symbol	V_{CC}					
	3.3V ± 0.3V	**2.5V ± 0.2V**	**1.8V ± 0.15V**	**1.5V ± 0.1V**	**1.2V ± 0.1V**	**0.9V**
V_{mi}	1.5V	V_{CC} / 2	V_{CC} / 2	V_{CC} / 2	V_{CC} / 2	V_{CC} / 2
V_{mo}	1.5V	V_{CC} / 2	V_{CC} / 2	V_{CC} / 2	V_{CC} / 2	V_{CC} / 2

Physical Dimensions

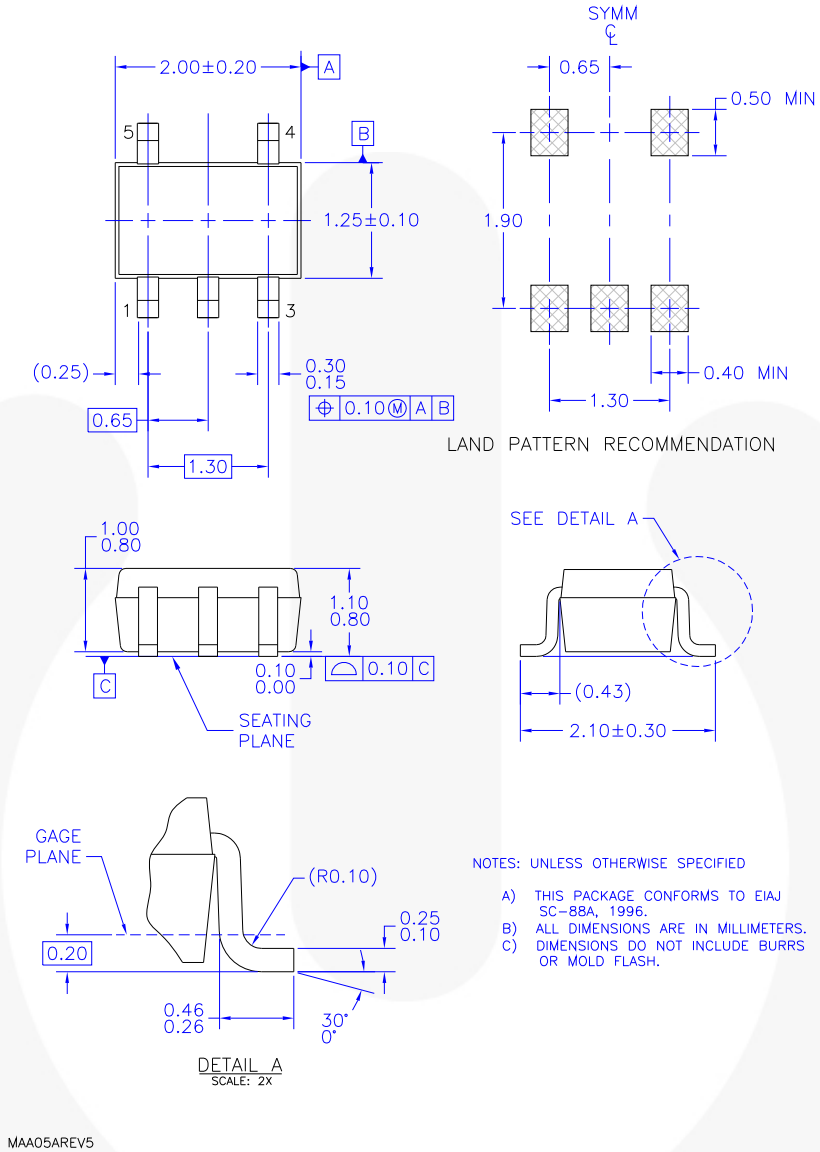

Figure 7. 5-Lead, SC70, EIAJ SC-88a, 1.25mm Wide

Package drawings are provided as a service to customers considering Fairchild components. Drawings may change in any manner without notice. Please note the revision and/or date on the drawing and contact a Fairchild Semiconductor representative to verify or obtain the most recent revision. Package specifications do not expand the terms of Fairchild's worldwide terms and conditions, specifically the warranty therein, which covers Fairchild products.

Always visit Fairchild Semiconductor's online packaging area for the most recent package drawings: http://www.fairchildsemi.com/packaging/.

Tape and Reel Specification

Please visit Fairchild Semiconductor's online packaging area for the most recent tape and reel specifications: http://www.fairchildsemi.com/products/analog/pdf/sc70-5_tr.pdf.

Package Designator	Tape Section	Cavity Number	Cavity Status	Cover Type Status
P5X	Leader (Start End)	125 (Typical)	Empty	Sealed
	Carrier	3000	Filled	Sealed
	Trailer (Hub End)	75 (Typical)	Empty	Sealed

Physical Dimensions

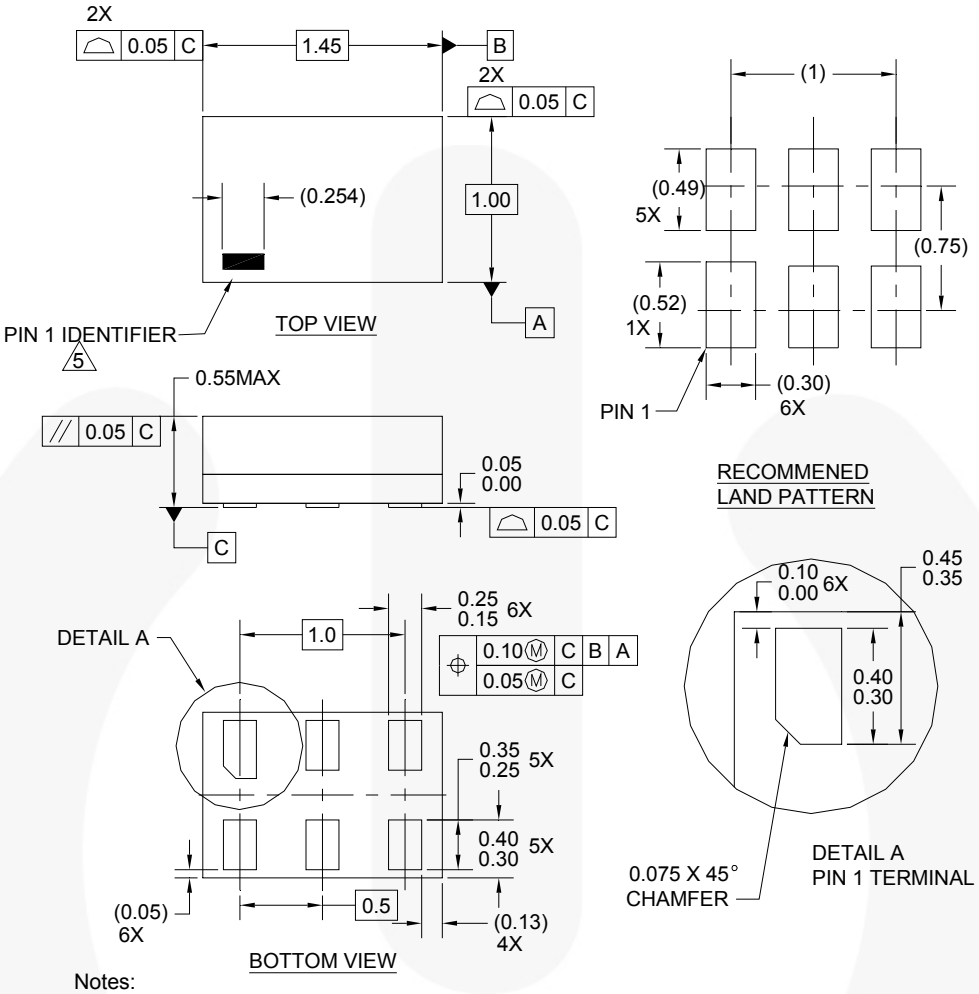

Notes:

1. CONFORMS TO JEDEC STANDARD M0-252 VARIATION UAAD
2. DIMENSIONS ARE IN MILLIMETERS
3. DRAWING CONFORMS TO ASME Y14.5M-1994
4. FILENAME AND REVISION: MAC06AREV4
5. PIN ONE IDENTIFIER IS 2X LENGTH OF ANY OTHER LINE IN THE MARK CODE LAYOUT.

Figure 8. 6-Lead, MicroPak™, 1.0mm Wide

Package drawings are provided as a service to customers considering Fairchild components. Drawings may change in any manner without notice. Please note the revision and/or date on the drawing and contact a Fairchild Semiconductor representative to verify or obtain the most recent revision. Package specifications do not expand the terms of Fairchild's worldwide terms and conditions, specifically the warranty therein, which covers Fairchild products.

Always visit Fairchild Semiconductor's online packaging area for the most recent package drawings: http://www.fairchildsemi.com/packaging/.

Tape and Reel Specification

Please visit Fairchild Semiconductor's online packaging area for the most recent tape and reel specifications: http://www.fairchildsemi.com/products/logic/pdf/micropak_tr.pdf.

Package Designator	Tape Section	Cavity Number	Cavity Status	Cover Type Status
L6X	Leader (Start End)	125 (Typical)	Empty	Sealed
	Carrier	5000	Filled	Sealed
	Trailer (Hub End)	75 (Typical)	Empty	Sealed

Physical Dimensions

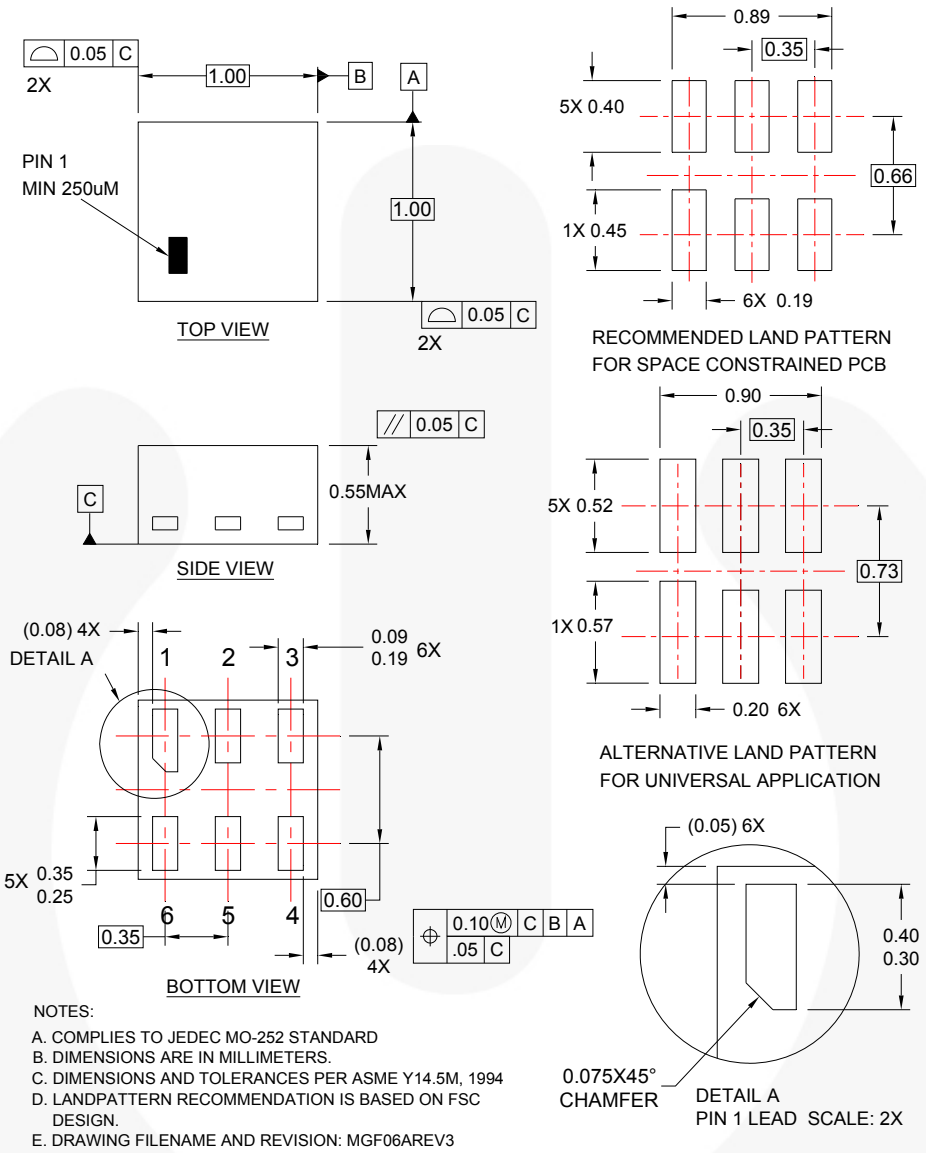

NOTES:

A. COMPLIES TO JEDEC MO-252 STANDARD
B. DIMENSIONS ARE IN MILLIMETERS.
C. DIMENSIONS AND TOLERANCES PER ASME Y14.5M, 1994
D. LANDPATTERN RECOMMENDATION IS BASED ON FSC DESIGN.
E. DRAWING FILENAME AND REVISION: MGF06AREV3

Figure 9. 6-Lead, MicroPak2™, 1x1mm Body, .35mm Pitch

Package drawings are provided as a service to customers considering Fairchild components. Drawings may change in any manner without notice. Please note the revision and/or date on the drawing and contact a Fairchild Semiconductor representative to verify or obtain the most recent revision. Package specifications do not expand the terms of Fairchild's worldwide terms and conditions, specifically the warranty therein, which covers Fairchild products.

Always visit Fairchild Semiconductor's online packaging area for the most recent package drawings: http://www.fairchildsemi.com/packaging/.

Tape and Reel Specification

Please visit Fairchild Semiconductor's online packaging area for the most recent tape and reel specifications: http://www.fairchildsemi.com/packaging/MicroPAK2_6L_tr.pdf.

Package Designator	Tape Section	Cavity Number	Cavity Status	Cover Type Status
FHX	Leader (Start End)	125 (Typical)	Empty	Sealed
	Carrier	5000	Filled	Sealed
	Trailer (Hub End)	75 (Typical)	Empty	Sealed

FAIRCHILD SEMICONDUCTOR®

TRADEMARKS

The following includes registered and unregistered trademarks and service marks, owned by Fairchild Semiconductor and/or its global subsidiaries, and is not intended to be an exhaustive list of all such trademarks.

AccuPower™
Auto-SPM™
AX-CAP™*
Build it Now™
CorePLUS™
CorePOWER™
CROSSVOLT™
CTL™
Current Transfer Logic™
DEUXPEED®
Dual Cool™
EcoSPARK®
EfficientMax™
ESBC™
F®
Fairchild®
Fairchild Semiconductor®
FACT Quiet Series™
FACT®
FAST®
FastvCore™
FETBench™
FlashWriter®*
FPS™
F-PFS™
FRFET®
Global Power Resource℠
Green FPS™
Green FPS™ e-Series™
G*max*™
GTO™
IntelliMAX™
ISOPLANAR™
MegaBuck™
MICROCOUPLER™
MicroFET™
MicroPak™
MicroPak2™
MillerDrive™
MotionMax™
Motion-SPM™
mWSaver™
OptoHiT™
OPTOLOGIC®
OPTOPLANAR®
®
PDP SPM™
Power-SPM™
PowerTrench®
PowerXS™
Programmable Active Droop™
QFET®
QS™
Quiet Series™
RapidConfigure™
™
Saving our world, 1mW/W/kW at a time™
SignalWise™
SmartMax™
SMART START™
SPM®
STEALTH™
SuperFET®
SuperSOT™-3
SuperSOT™-6
SuperSOT™-8
SupreMOS®
SyncFET™
Sync-Lock™
SYSTEM GENERAL®*
The Power Franchise®
The Right Technology for Your Success™
the power franchise
TinyBoost™
TinyBuck™
TinyCalc™
TinyLogic®
TINYOPTO™
TinyPower™
TinyPWM™
TinyWire™
TriFault Detect™
TRUECURRENT®*
µSerDes™
µSerDes
UHC®
Ultra FRFET™
UniFET™
VCX™
VisualMax™
XS™

* Trademarks of System General Corporation, used under license by Fairchild Semiconductor.

DISCLAIMER

FAIRCHILD SEMICONDUCTOR RESERVES THE RIGHT TO MAKE CHANGES WITHOUT FURTHER NOTICE TO ANY PRODUCTS HEREIN TO IMPROVE RELIABILITY, FUNCTION, OR DESIGN. FAIRCHILD DOES NOT ASSUME ANY LIABILITY ARISING OUT OF THE APPLICATION OR USE OF ANY PRODUCT OR CIRCUIT DESCRIBED HEREIN; NEITHER DOES IT CONVEY ANY LICENSE UNDER ITS PATENT RIGHTS, NOR THE RIGHTS OF OTHERS. THESE SPECIFICATIONS DO NOT EXPAND THE TERMS OF FAIRCHILD'S WORLDWIDE TERMS AND CONDITIONS, SPECIFICALLY THE WARRANTY THEREIN, WHICH COVERS THESE PRODUCTS.

LIFE SUPPORT POLICY

FAIRCHILD'S PRODUCTS ARE NOT AUTHORIZED FOR USE AS CRITICAL COMPONENTS IN LIFE SUPPORT DEVICES OR SYSTEMS WITHOUT THE EXPRESS WRITTEN APPROVAL OF FAIRCHILD SEMICONDUCTOR CORPORATION.

As used herein:

1. Life support devices or systems are devices or systems which, (a) are intended for surgical implant into the body or (b) support or sustain life, and (c) whose failure to perform when properly used in accordance with instructions for use provided in the labeling, can be reasonably expected to result in a significant injury of the user.
2. A critical component in any component of a life support, device, or system whose failure to perform can be reasonably expected to cause the failure of the life support device or system, or to affect its safety or effectiveness.

ANTI-COUNTERFEITING POLICY

Fairchild Semiconductor Corporation's Anti-Counterfeiting Policy. Fairchild's Anti-Counterfeiting Policy is also stated on our external website, www.fairchildsemi.com, under Sales Support.

Counterfeiting of semiconductor parts is a growing problem in the industry. All manufacturers of semiconductor products are experiencing counterfeiting of their parts. Customers who inadvertently purchase counterfeit parts experience many problems such as loss of brand reputation, substandard performance, failed applications, and increased cost of production and manufacturing delays. Fairchild is taking strong measures to protect ourselves and our customers from the proliferation of counterfeit parts. Fairchild strongly encourages customers to purchase Fairchild parts either directly from Fairchild or from Authorized Fairchild Distributors who are listed by country on our web page cited above. Products customers buy either from Fairchild directly or from Authorized Fairchild Distributors are genuine parts, have full traceability, meet Fairchild's quality standards for handling and storage and provide access to Fairchild's full range of up-to-date technical and product information. Fairchild and our Authorized Distributors will stand behind all warranties and will appropriately address any warranty issues that may arise. Fairchild will not provide any warranty coverage or other assistance for parts bought from Unauthorized Sources. Fairchild is committed to combat this global problem and encourage our customers to do their part in stopping this practice by buying direct or from authorized distributors.

PRODUCT STATUS DEFINITIONS

Definition of Terms

Datasheet Identification	Product Status	Definition
Advance Information	Formative / In Design	Datasheet contains the design specifications for product development. Specifications may change in any manner without notice.
Preliminary	First Production	Datasheet contains preliminary data; supplementary data will be published at a later date. Fairchild Semiconductor reserves the right to make changes at any time without notice to improve design.
No Identification Needed	Full Production	Datasheet contains final specifications. Fairchild Semiconductor reserves the right to make changes at any time without notice to improve the design.
Obsolete	Not In Production	Datasheet contains specifications on a product that is discontinued by Fairchild Semiconductor. The datasheet is for reference information only.

Rev. I53

© 2001 Fairchild Semiconductor Corporation

ON Semiconductor and ON are trademarks of Semiconductor Components Industries, LLC dba ON Semiconductor or its subsidiaries in the United States and/or other countries. ON Semiconductor owns the rights to a number of patents, trademarks, copyrights, trade secrets, and other intellectual property. A listing of ON Semiconductor's product/patent coverage may be accessed at www.onsemi.com/site/pdf/Patent−Marking.pdf. ON Semiconductor reserves the right to make changes without further notice to any products herein. ON Semiconductor makes no warranty, representation or guarantee regarding the suitability of its products for any particular purpose, nor does ON Semiconductor assume any liability arising out of the application or use of any product or circuit, and specifically disclaims any and all liability, including without limitation special, consequential or incidental damages. Buyer is responsible for its products and applications using ON Semiconductor products, including compliance with all laws, regulations and safety requirements or standards, regardless of any support or applications information provided by ON Semiconductor. "Typical" parameters which may be provided in ON Semiconductor data sheets and/or specifications can and do vary in different applications and actual performance may vary over time. All operating parameters, including "Typicals" must be validated for each customer application by customer's technical experts. ON Semiconductor does not convey any license under its patent rights nor the rights of others. ON Semiconductor products are not designed, intended, or authorized for use as a critical component in life support systems or any FDA Class 3 medical devices or medical devices with a same or similar classification in a foreign jurisdiction or any devices intended for implantation in the human body. Should Buyer purchase or use ON Semiconductor products for any such unintended or unauthorized application, Buyer shall indemnify and hold ON Semiconductor and its officers, employees, subsidiaries, affiliates, and distributors harmless against all claims, costs, damages, and expenses, and reasonable attorney fees arising out of, directly or indirectly, any claim of personal injury or death associated with such unintended or unauthorized use, even if such claim alleges that ON Semiconductor was negligent regarding the design or manufacture of the part. ON Semiconductor is an Equal Opportunity/Affirmative Action Employer. This literature is subject to all applicable copyright laws and is not for resale in any manner.

PUBLICATION ORDERING INFORMATION

LITERATURE FULFILLMENT:
Literature Distribution Center for ON Semiconductor
19521 E. 32nd Pkwy, Aurora, Colorado 80011 USA
Phone: 303−675−2175 or 800−344−3860 Toll Free USA/Canada
Fax: 303−675−2176 or 800−344−3867 Toll Free USA/Canada
Email: orderlit@onsemi.com

N. American Technical Support: 800−282−9855 Toll Free USA/Canada
Europe, Middle East and Africa Technical Support:
Phone: 421 33 790 2910
Japan Customer Focus Center
Phone: 81−3−5817−1050

ON Semiconductor Website: **www.onsemi.com**

Order Literature: http://www.onsemi.com/orderlit

For additional information, please contact your local Sales Representative