FAIRCHILD™

Is Now Part of

ON Semiconductor®

To learn more about ON Semiconductor, please visit our website at
www.onsemi.com

ON Semiconductor and the ON Semiconductor logo are trademarks of Semiconductor Components Industries, LLC dba ON Semiconductor or its subsidiaries in the United States and/or other countries. ON Semiconductor owns the rights to a number of patents, trademarks, copyrights, trade secrets, and other intellectual property. A listing of ON Semiconductor's product/patent coverage may be accessed at www.onsemi.com/site/pdf/Patent-Marking.pdf. ON Semiconductor reserves the right to make changes without further notice to any products herein. ON Semiconductor makes no warranty, representation or guarantee regarding the suitability of its products for any particular purpose, nor does ON Semiconductor assume any liability arising out of the application or use of any product or circuit, and specifically disclaims any and all liability, including without limitation special, consequential or incidental damages. Buyer is responsible for its products and applications using ON Semiconductor products, including compliance with all laws, regulations and safety requirements or standards, regardless of any support or applications information provided by ON Semiconductor. "Typical" parameters which may be provided in ON Semiconductor data sheets and/or specifications can and do vary in different applications and actual performance may vary over time. All operating parameters, including "Typicals" must be validated for each customer application by customer's technical experts. ON Semiconductor does not convey any license under its patent rights nor the rights of others. ON Semiconductor products are not designed, intended, or authorized for use as a critical component in life support systems or any FDA Class 3 medical devices or medical devices with a same or similar classification in a foreign jurisdiction or any devices intended for implantation in the human body. Should Buyer purchase or use ON Semiconductor products for any such unintended or unauthorized application, Buyer shall indemnify and hold ON Semiconductor and its officers, employees, subsidiaries, affiliates, and distributors harmless against all claims, costs, damages, and expenses, and reasonable attorney fees arising out of, directly or indirectly, any claim of personal injury or death associated with such unintended or unauthorized use, even if such claim alleges that ON Semiconductor was negligent regarding the design or manufacture of the part. ON Semiconductor is an Equal Opportunity/Affirmative Action Employer. This literature is subject to all applicable copyright laws and is not for resale in any manner.

August 2005

FAN5331
High Efficiency Serial LED Driver and OLED Supply with 20V Integrated Switch

Features

- 1.6MHz Switching Frequency
- Low Noise
- Low $R_{DS(ON)}$: 0.5Ω
- Adjustable Output Voltage
- 1A Peak Switch Current
- 1W Output Power Capability
- Low Shutdown Current: <1µA
- Cycle-by-Cycle Current Limit
- Over-Voltage Protection
- Fixed-Frequency PWM Operation
- Internal Compensation
- 5-lead SOT-23 Package

Applications

- Cell Phones
- PDAs
- Handheld Equipment
- Display Bias
- LED Bias

Description

The FAN5331 is a general purpose, fixed-frequency boost converter designed to operate at high switching frequencies in order to minimize switching noise measured at the battery terminal of hand-held communications equipment. Quiescent current in normal mode of operation as well as in shutdown mode is designed to be minimal in order to extend battery life. Normal mode of operation or shutdown mode can be selected by a logic level shutdown circuitry.

The low ON-resistance of the internal N-channel switch ensures high efficiency and low power dissipation. A cycle-by-cycle current limit circuit keeps the peak current of the switch below a typical value of 1A. The FAN5331 is available in a 5-lead SOT-23 package.

Typical Application

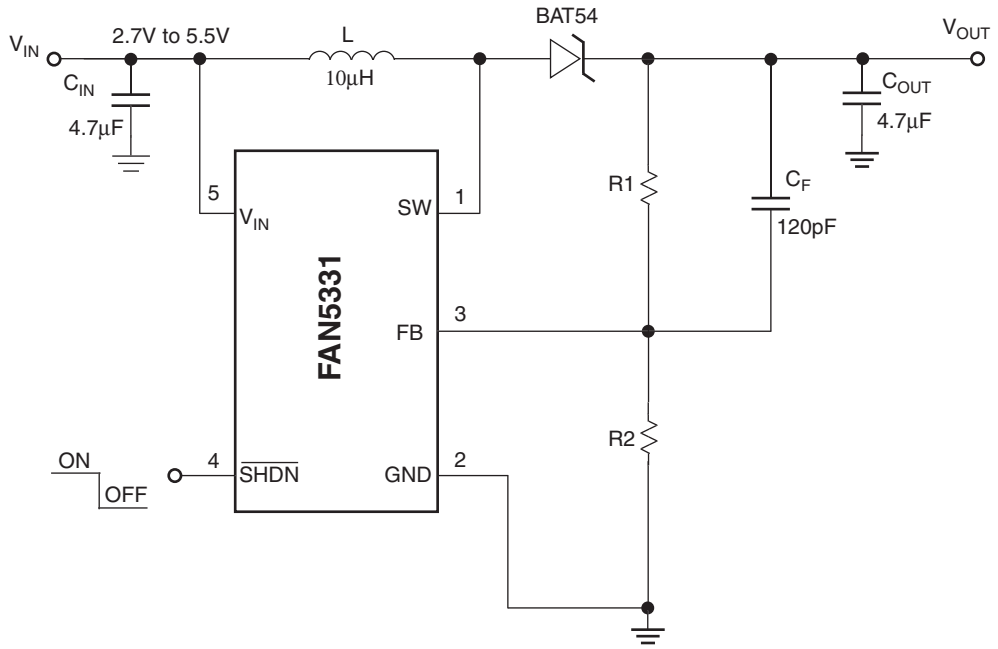

Figure 1. Typical Application Diagram

Pin Assignment

Top View

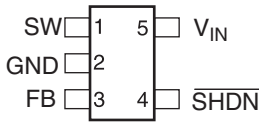

5-Lead SOT-23

Figure 2. Pin Assignment

Pin Description

Pin No.	Pin Name	Pin Description
1	SW	Switching node.
2	GND	Analog and power ground.
3	FB	Feedback node that connects to an external voltage divider.
4	$\overline{SHDN}$	Shutdown control pin. Logic HIGH enables, logic LOW disables the device.
5	V_{IN}	Input voltage.

Absolute Maximum Ratings (Note1)

Parameter		Min	Max	Unit
V_{IN} to GND			6.0	V
FB, $\overline{SHDN}$ to GND		-0.3	V_{IN} + 0.3	V
SW to GND		-0.3	23	V
Lead Soldering Temperature (10 seconds)			300	°C
Junction Temperature			150	°C
Storage Temperature		-55	150	°C
Thermal Resistance (Θ_{JA})			265	°C/W
Electrostatic Discharge Protection (ESD) Level (Note 2)	HBM	2.5		kV
	CDM	1		

Recommended Operating Conditions

Parameter	Min	Typ	Max	Unit
Input Voltage	2.7		5.5	V
Output Voltage	V_{IN}		20	V
Operating Ambient Temperature	-40	25	85	°C
Output Capacitance (Note 3)	1.6			µF

Notes:

1. Stresses above those listed under “Absolute Maximum Ratings” may cause permanent damage to the device. This is a stress rating only and functional operation of the device at these or any other conditions above those indicated in the operational section of this specification is not implied. Exposure to absolute maximum rating conditions for extended periods may affect device reliability. Absolute maximum ratings apply individually only, not in combination.
2. Using EIA/JESD22A114B (Human Body Model) and EIA/JESD22C101-A (Charge Device Model).
3. This load capacitance value is required for the loop stability. Tolerance, temperature variation, and voltage dependency of the capacitance must be considered. Typically a 4.7µF ceramic capacitor is required to achieve specified value at V_{OUT} = 15V.

Electrical Characteristics

Unless otherwise noted, V_{IN} = 3.6V, T_A = -40°C to +85°C, Typical values are at T_A = 25°C, Test Circuit, Figure 3.

Parameter	Conditions	Min.	Typ.	Max.	Units
Switch Current Limit	V_{IN} = 3.2V	0.7	1		A
Load Current Capability	V_{OUT} = 15V, $V_{IN} \geq$ 2.7V	35			mA
	V_{OUT} = 15V, $V_{IN} \geq$ 3.2V	50			mA
Switch On-resistance	V_{IN} = 5V		0.5		Ω
	V_{IN} = 3.6V		0.7		Ω
Quiescent Current	$V_{\overline{SHDN}}$ = 3.6V, No Switching		0.7		mA
	$V_{\overline{SHDN}}$ = 3.6V, Switching		1.6	3.0	mA
OFF Mode Current	$V_{\overline{SHDN}}$ = 0V		0.1	2	µA
Shutdown Threshold	Device ON	1.5			V
	Device OFF			0.5	V
Shutdown Pin Bias Current	$V_{\overline{SHDN}}$ = 0V or $V_{\overline{SHDN}}$ = 5.5V		10		nA
Feedback Voltage	I_{Load} = 0mA	1.205	1.230	1.255	V
Feedback Pin Bias Current			10		nA
Feedback Voltage Line Regulation	2.7V < V_{IN} < 5.5V, I_{LOAD} = 0mA		0.6	1.2	%
Switching Frequency		1.15	1.6	1.85	MHz
Maximum Duty Cycle		87	93		%
Enable Delay	V_{IN} = 2.7V, I_{OUT} = 35mA, V_{OUT} = 15V		0.8	5	mS
Power on Delay	V_{IN} = 2.7V, I_{OUT} = 35mA, V_{OUT} = 15V		0.8	5	mS
Switch Leakage Current	No Switching, V_{IN} = 5.5V			1	µA

Test Circuit

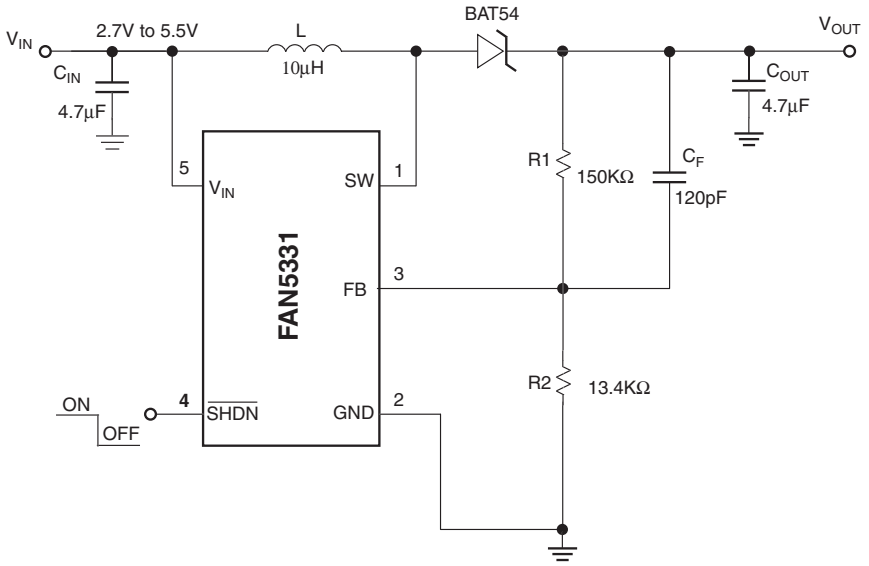

Figure 3. Test Circuit

Typical Performance Characteristics

T_A = 25°C, Test Circuit Figure 3, unless otherwise noted.

Output Voltage vs Input Voltage

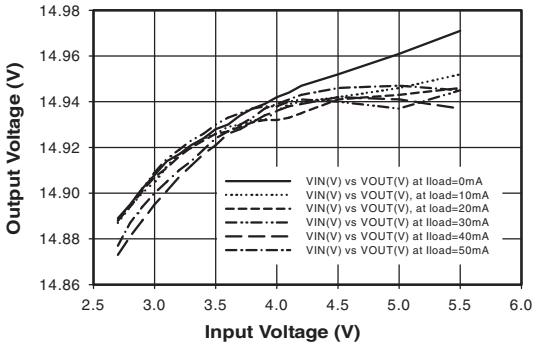

Maximum Load Current vs Input Voltage

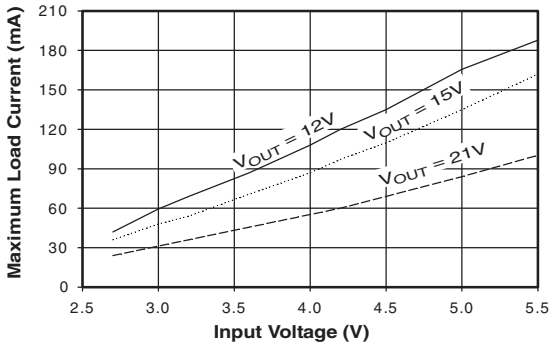

Efficiency vs Input Voltage

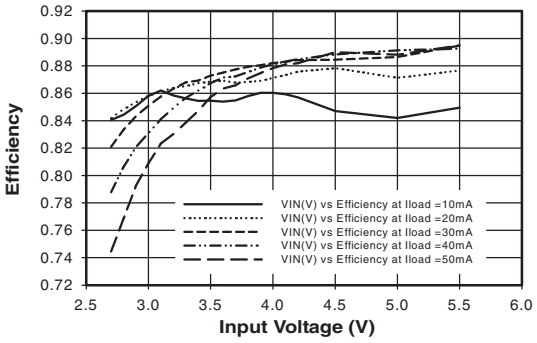

Feedback Voltage vs Ambient Temperature

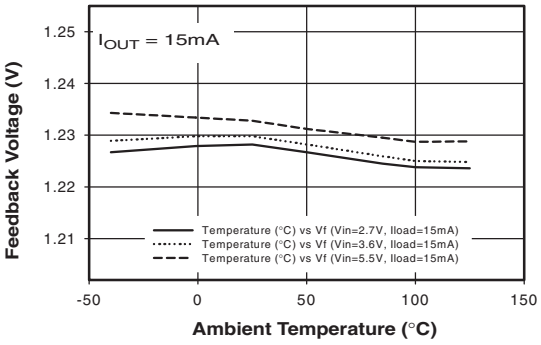

Supply Current vs Input Voltage

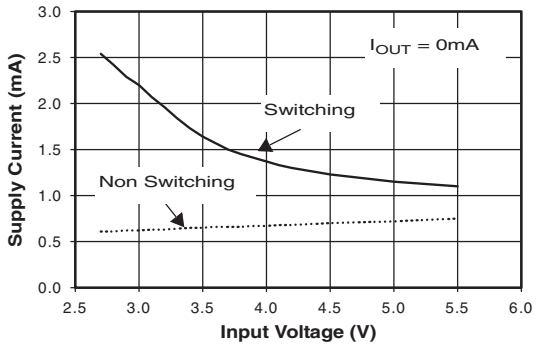

Switching Frequency vs Ambient Temperature

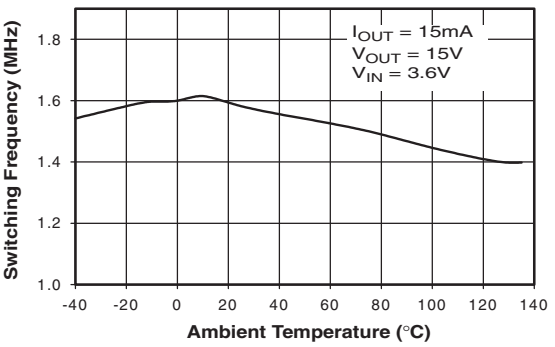

Typical Performance Characteristics (Contd.)

T_A = 25°C, Test Circuit Figure 3, unless otherwise noted.

Startup After Enable

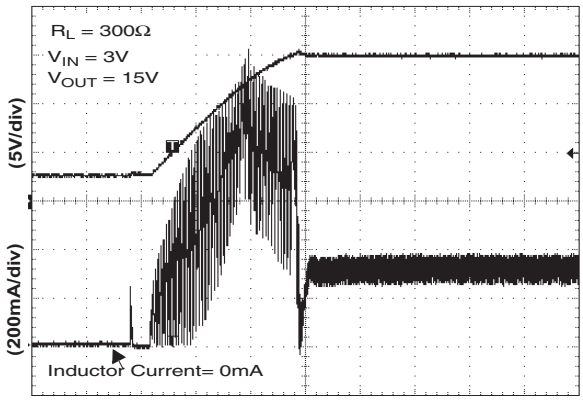

Line Transient Response

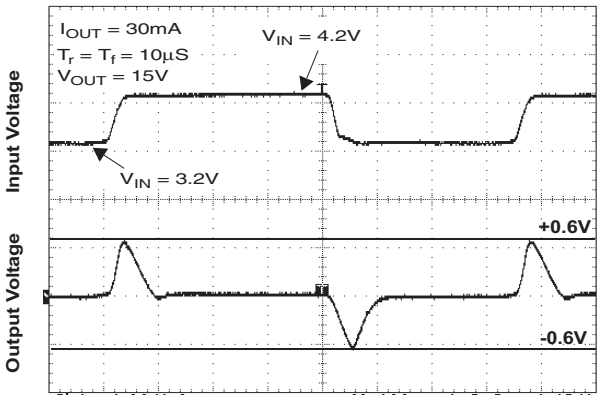

Load Transient Response

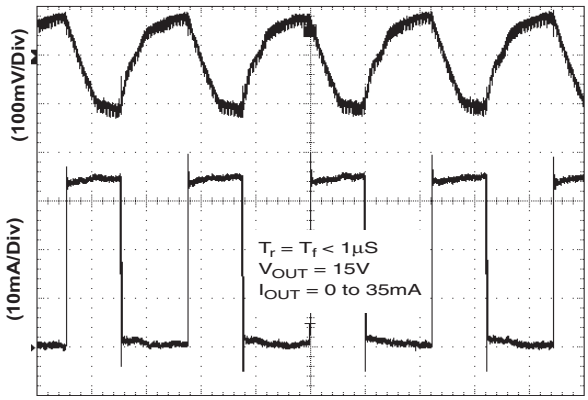

Output Power Spectral Density

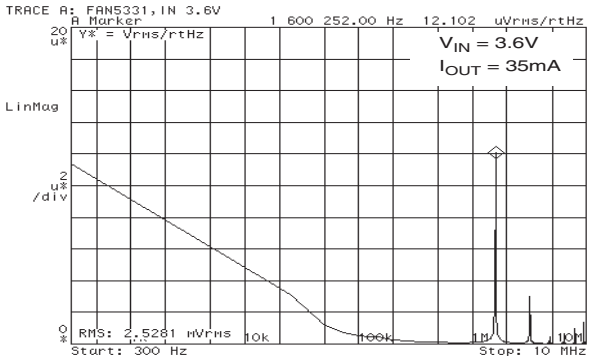

Block Diagram

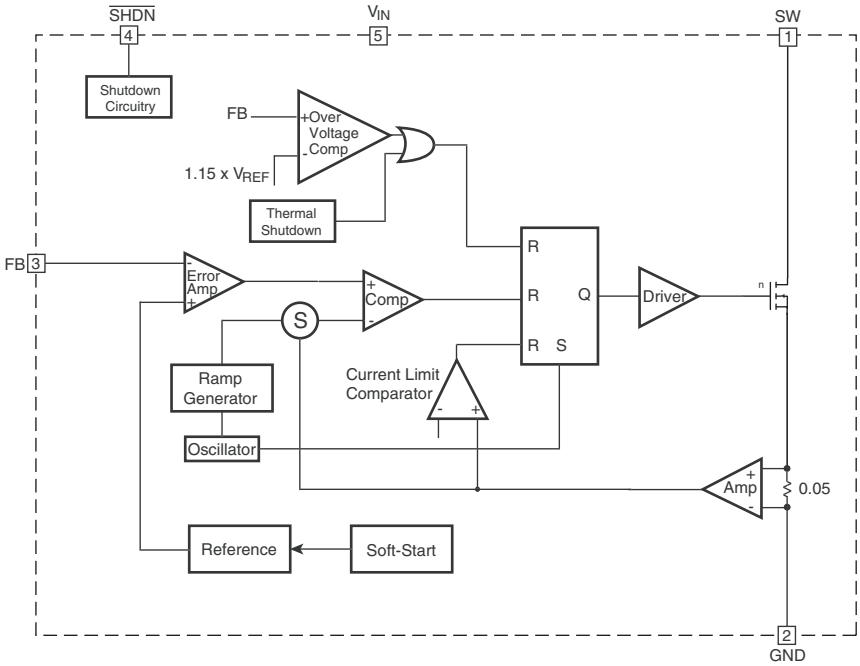

Figure 4. Block Diagram

Circuit Description

The FAN5331 is a pulse-width modulated (PWM) current-mode boost converter. The FAN5331 improves the performance of battery powered equipment by significantly minimizing the spectral distribution of noise at the input caused by the switching action of the regulator. In order to facilitate effective noise filtering, the switching frequency was chosen to be high, 1.6MHz. An internal soft start circuitry minimizes in-rush currents. The timing of the soft start circuit was chosen to reach 95% of the nominal output voltage within maximum 5mS following an enable command when V_{IN} = 2.7V, V_{OUT} = 15V, I_{LOAD} = 35mA and $C_{OUT\ (EFFECTIVE)}$ = 3.2µF.

The device architecture is that of a current mode controller with an internal sense resistor connected in series with the N-channel switch. The voltage at the feedback pin tracks the output voltage at the cathode of the external Schottky diode (shown in the test circuit). The error amplifier amplifies the difference between the feedback voltage and the internal bandgap reference. The amplified error voltage serves as a reference voltage to the PWM comparator. The inverting input of the PWM comparator consists of the sum of two components: the amplified control signal received from the 50mΩ current sense resistor and the ramp generator voltage derived from the oscillator. The oscillator sets the latch, and the latch turns on the FET switch. Under normal operating conditions, the PWM comparator resets the latch and turns off the FET, thus terminating the pulse. Since the comparator input contains information about the output voltage and the control loop is arranged to form a negative feedback loop, the value of the peak inductor current will be adjusted to maintain regulation.

Every time the latch is reset, the FET is turned off and the current flow through the switch is terminated. The latch can be reset by other events as well. Over-current condition is monitored by the current limit comparator which resets the latch and turns off the switch instantaneously within each clock cycle.

Over-Voltage Protection

The voltage on the feedback pin is sensed by an OVP Comparator. When the feedback voltage is 15% higher than the nominal voltage, the OVP Comparator stops switching of the power transistor, thus preventing the output voltage from going higher.

Applications Information

Setting the Output Voltage

The internal reference is 1.23V (Typical). The output voltage is divided by a resistor divider, R1 and R2 to the FB pin. The output voltage is given by

$$V_{OUT} = V_{REF}\left(1 + \frac{R_1}{R_2}\right)$$

According to this equation, and assuming desired output voltage of 15V, good choices for the feedback resistors are, R_1=150kΩ and R_2=13.4kΩ.

Inductor Selection

The inductor parameters directly related to device performances are saturation current and dc resistance. The FAN5331 operates with a typical inductor value of 10µH. The lower the dc resistance, the higher the efficiency. Usually a trade-off between inductor size, cost and overall efficiency is needed to make the optimum choice.

The inductor saturation current should be rated around 1A, which is the threshold of the internal current limit circuit. This limit is reached only during the start-up and with heavy load condition; when this event occurs the converter can shift over in discontinuous conduction mode due to the automatic turn-off of the switching transistor, resulting in higher ripple and reduced efficiency.

Some recommended inductors are suggested in the table below:

Inductor Value	Vendor	Part Number	Comment
10µH	Panasonic	ELL6GM100M	Lower Profile (1.6mm)
10µH	Murata	LQS66SN100M03L	Highest Efficiency
10µH	Coilcraft	DO1605T-103Mx	Small Size

Table 1: Recommended Inductors

Capacitors Selection

For best performance, low ESR input and output capacitors are required. Ceramic capacitors in the range 4.7µF to 10µF, placed as close to the IC pins, are recommended for the lower input and output ripple. The output capacitor voltage rating should be according to the V_{OUT} setting.

A feed forward capacitor C_F, is required for stability. The recommended value (R_1 x C_F) is around 18µS. Some capacitors are suggested in the table below.

Capacitor Value	Vendor	Part Number
4.7µF	Panasonic	ECJ3YB1C475K
4.7µF	Murata	GRM31CR61C475

Table 2: Recommended Capacitors

Diode Selection

The external diode used for rectification is usually a Schottky diode. Its average forward current and reverse voltage maximum ratings should exceed the load current and the voltage at the output of the converter respectively. A barrier Schottky diode such as BAT54 is preferred, due to its lower reverse current over the temperature range.

Care should be taken to avoid any short circuit of V_{OUT} to GND, even with the IC disabled, since the diode can be instantly damaged by the excessive current.

Thermal Shutdown

When the die temperature exceeds 150°C, a reset occurs and will remain in effect until the die cools to 130°C, at that time the circuit will be allowed to restart.

PCB Layout Recommendations

The inherently high peak currents and switching frequency of power supplies require careful PCB layout design. Therefore, use wide traces for high current paths and place the input capacitor, the inductor, and the output capacitor as close as possible to the integrated circuit terminals. The resistor divider that sets the output voltage should be routed away from the inductor to avoid RF coupling. A four layer PCB with at least one ground plane connected to the pin 2 of the IC is recommended. This ground plane acts as an electromagnetic shield to reduce EMI and parasitic coupling between components.

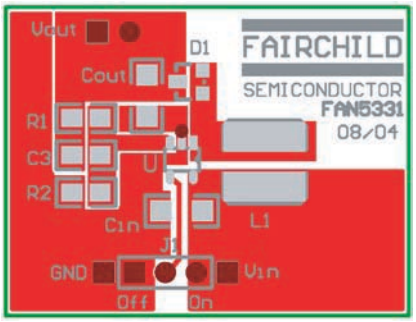

Figure 5. Recommended Layout

Application Examples

1. LED Driver

One or more serial LED strings can be driven with a constant current, set by the series resistor, given by

$$I_{LED} = \frac{1.23V}{R1}$$

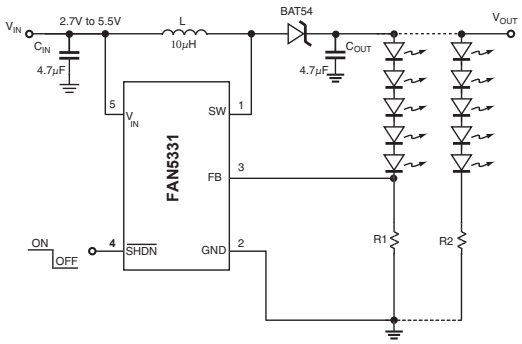

Figure 6. Low Noise Boost LED Driver

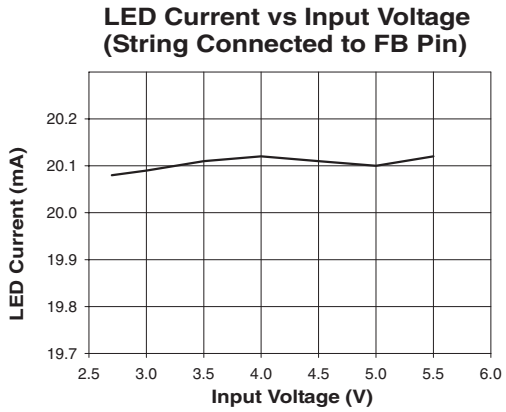

The feedback loop tightly regulates the current in the branch connected to FB pin, while the current in the other branch depends on the sum of the LED's forward voltages, V_{OUT} and the ballast resistor. The input and the output ripple is less than $3mV_{RMS}$, for load currents up to 40mA.

A Zener diode (V_Z = 22V) connected between V_{OUT} and GND can prevent the FAN5331 from being damaged by over-voltage, if the load is accidently disconnected during operation.

2. Dual Boost Converter

A negative voltage can be provided by adding an external charge pump (C1, C2, D2, and D3).

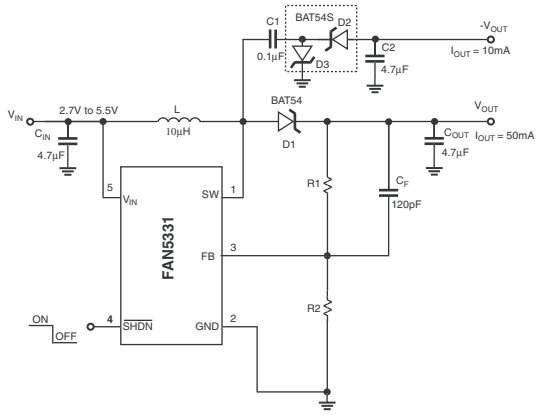

Figure 7. Dual (±) Boost Converter

While the feedback loop tightly regulates V_{OUT}, the negative output voltage ($-V_{OUT}$) can supply a light load with a negative voltage. Nevertheless, the negative voltage depends on the changes of the load current in both $-V_{OUT}$ and $+V_{OUT}$, as shown in the graph below.

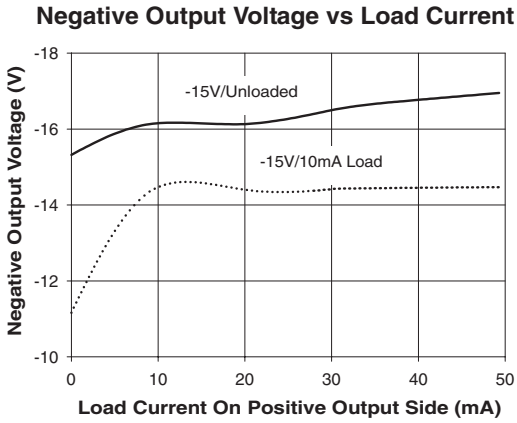

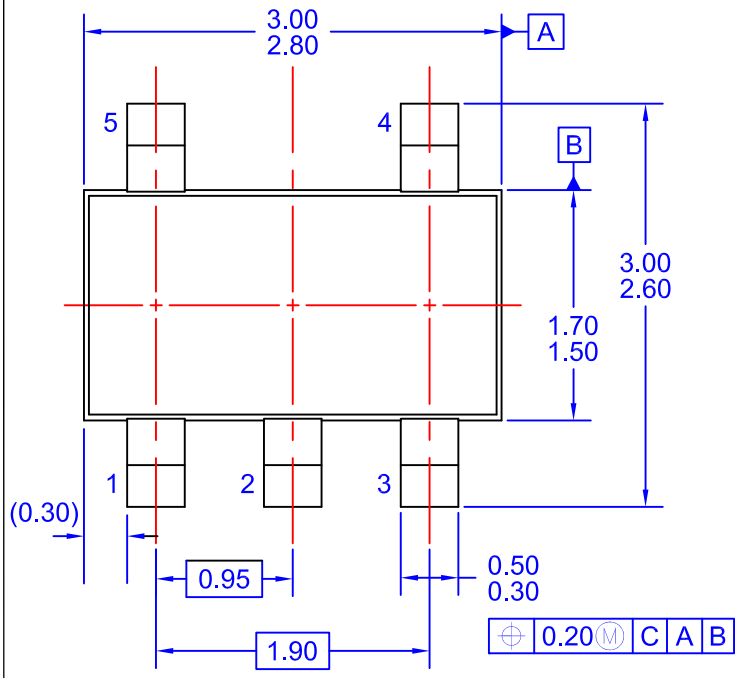

TOP VIEW

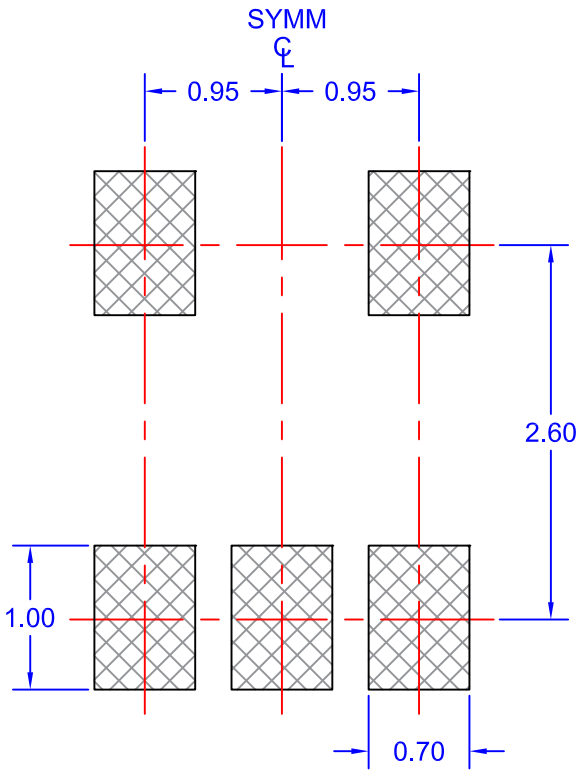

LAND PATTERN RECOMMENDATION

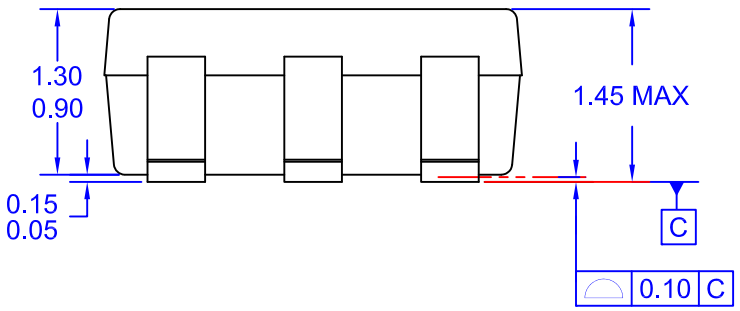

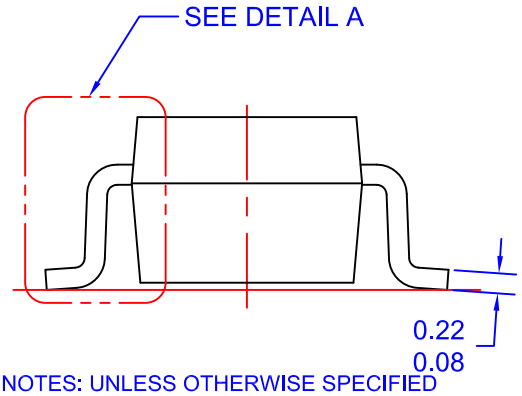

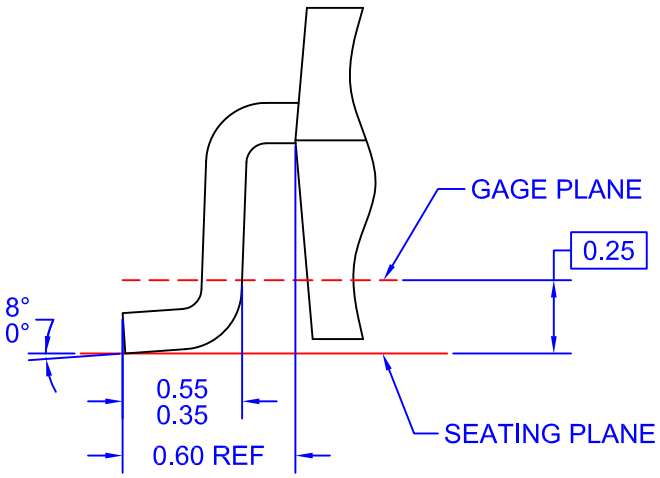

NOTES: UNLESS OTHERWISE SPECIFIED

A) PACKAGE STANDARD REFERENCE: JEDEC REGISTRATION, MO-178, ISSUE B, VARIATION AA.

B) ALL DIMENSIONS ARE IN MILLIMETERS.

C) DIMENSIONS DO NOT INCLUDE BURRS OR MOLD FLASH. MOLD FLASH OR BURRS DOES NOT EXCEED 0.10MM.

D) DIMENSIONING AND TOLERANCING PER ASME Y14.5M-2009.

E) DRAWING FILE NAME: MKT-MA05BREV6

FAIRCHILD™

ON Semiconductor and ON are trademarks of Semiconductor Components Industries, LLC dba ON Semiconductor or its subsidiaries in the United States and/or other countries. ON Semiconductor owns the rights to a number of patents, trademarks, copyrights, trade secrets, and other intellectual property. A listing of ON Semiconductor's product/patent coverage may be accessed at www.onsemi.com/site/pdf/Patent−Marking.pdf. ON Semiconductor reserves the right to make changes without further notice to any products herein. ON Semiconductor makes no warranty, representation or guarantee regarding the suitability of its products for any particular purpose, nor does ON Semiconductor assume any liability arising out of the application or use of any product or circuit, and specifically disclaims any and all liability, including without limitation special, consequential or incidental damages. Buyer is responsible for its products and applications using ON Semiconductor products, including compliance with all laws, regulations and safety requirements or standards, regardless of any support or applications information provided by ON Semiconductor. "Typical" parameters which may be provided in ON Semiconductor data sheets and/or specifications can and do vary in different applications and actual performance may vary over time. All operating parameters, including "Typicals" must be validated for each customer application by customer's technical experts. ON Semiconductor does not convey any license under its patent rights nor the rights of others. ON Semiconductor products are not designed, intended, or authorized for use as a critical component in life support systems or any FDA Class 3 medical devices or medical devices with a same or similar classification in a foreign jurisdiction or any devices intended for implantation in the human body. Should Buyer purchase or use ON Semiconductor products for any such unintended or unauthorized application, Buyer shall indemnify and hold ON Semiconductor and its officers, employees, subsidiaries, affiliates, and distributors harmless against all claims, costs, damages, and expenses, and reasonable attorney fees arising out of, directly or indirectly, any claim of personal injury or death associated with such unintended or unauthorized use, even if such claim alleges that ON Semiconductor was negligent regarding the design or manufacture of the part. ON Semiconductor is an Equal Opportunity/Affirmative Action Employer. This literature is subject to all applicable copyright laws and is not for resale in any manner.

PUBLICATION ORDERING INFORMATION

LITERATURE FULFILLMENT:
Literature Distribution Center for ON Semiconductor
19521 E. 32nd Pkwy, Aurora, Colorado 80011 USA
Phone: 303−675−2175 or 800−344−3860 Toll Free USA/Canada
Fax: 303−675−2176 or 800−344−3867 Toll Free USA/Canada
Email: orderlit@onsemi.com

N. American Technical Support: 800−282−9855 Toll Free USA/Canada
Europe, Middle East and Africa Technical Support:
Phone: 421 33 790 2910
Japan Customer Focus Center
Phone: 81−3−5817−1050

ON Semiconductor Website: **www.onsemi.com**

Order Literature: http://www.onsemi.com/orderlit

For additional information, please contact your local Sales Representative