molex
one company › a world of innovation

This document was generated on 07/21/2016

# PLEASE CHECK WWW.MOLEX.COM FOR LATEST PART INFORMATION

**Part Number:** 5034801700

**Status:** Active

**Overview:** FFC-FPC (SMT)

**Description:** 0.50mm Pitch Easy-On™ BackFlip™ Type FPC Connector, 1.00mm Height, Right Angle, Surface Mount, Dual Contact Style, 17 Circuits

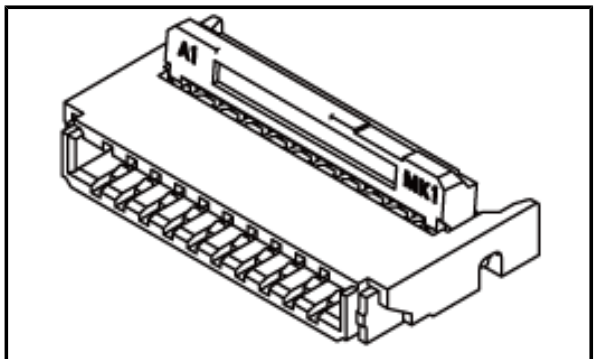


*Series image - Reference only*

**Documents:**

3D Model
Drawing (PDF)
Product Specification PS-503480-001 (PDF)
Packaging Specification SPK-503480-001 (PDF)
RoHS Certificate of Compliance (PDF)

**Agency Certification**

| | |
|---|---|
| UL | E29179 |

**General**

| | |
|---|---|
| Product Family | FFC/FPC Connectors |
| Series | 503480 |
| Comments | Black Actuator |
| Overview | FFC-FPC (SMT) |
| Product Name | BackFlip™, Easy-On™ |
| UPC | 884982158023 |

**Physical**

| | |
|---|---|
| Circuits (Loaded) | 17 |
| Color - Resin | Natural (White) |
| Contact Position | Dual |
| Durability (mating cycles max) | 10 |
| Entry Angle | 90° Angle |
| Flammability | 94V-0 |
| Mated Height | 1.00mm |
| Material - Metal | Phosphor Bronze |
| Material - Plating Mating | Gold over Nickel |
| Material - Plating Termination | Gold over Nickel |
| Material - Resin | Liquid Crystal Polymer |
| Net Weight | 59.521/mg |
| Number of Rows | 1 |
| Orientation | Right Angle |
| PCB Locator | No |
| PCB Retention | Yes |
| Packaging Type | Embossed Tape on Reel |
| Pitch - Mating Interface | 0.50mm |
| Polarized to PCB | Yes |
| Stackable | No |
| Temperature Range - Operating | -40°C to +85°C |
| Termination Interface: Style | Surface Mount |
| Wire/Cable Type | FFC/FPC |

**Electrical**

| | |
|---|---|
| Current - Maximum per Contact | 0.5A |
| Voltage - Maximum | 50V AC (RMS)/DC |

**Solder Process Data**

| | |
|---|---|
| Duration at Max. Process Temperature (seconds) | 003 |
| Lead-freeProcess Capability | REFLOW |
| Max. Cycles at Max. Process Temperature | 002 |
| Process Temperature max. C | 250 |

**Material Info**

**EU ELV**
**Not Relevant**

**EU RoHS**
**Compliant**

**China RoHS**

**REACH SVHC**
Not Contained Per - ED/21/2016 (20 June 2016)

**Halogen-Free Status**
**Low-Halogen**

**Need more information on product environmental compliance?**

Email productcompliance@molex.com
Please visit the Contact Us section for any non-product compliance questions.

| | |
|---|---|
| China ROHS | Green Image |
| ELV | Not Relevant |

**Search Parts in this Series**
503480 Series

**Mates With**
<a href="http://www.molex.com/product/premoflex_ffc-fpc.html">Molex Premo-Flex FFC</a>. Be sure to match like plating

**Reference - Drawing Numbers**

| | |
|---|---|
| Packaging Specification | SPK-503480-001 |
| Product Specification | PS-503480-001, RPS-503480-001 |
| Sales Drawing | SD-503480-001, SD-503480-002 |

This document was generated on 07/21/2016

**PLEASE CHECK WWW.MOLEX.COM FOR LATEST PART INFORMATION**