Ultrafast Rectifier, 2 x 8 A FRED Pt®

TO-263AB (D^2PAK)

TO-262AA

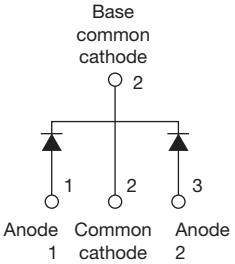

VS-MURB1620CTPbF

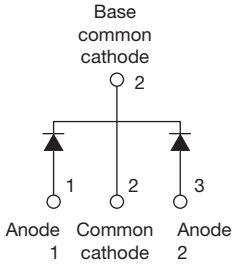

VS-MURB1620CT-1PbF

FEATURES

- Ultrafast recovery time
- Low forward voltage drop
- Low leakage current
- 175 °C operating junction temperature
- Meets MSL level 1, per J-STD-020, LF maximum peak of 260 °C
- AEC-Q101 qualified
- Material categorization: for definitions of compliance please see www.vishay.com/doc?99912

Pb
e3
RoHS COMPLIANT
HALOGEN FREE

DESCRIPTION / APPLICATIONS

MUR.. series are the state of the art ultrafast recovery rectifiers specifically designed with optimized performance of forward voltage drop and ultrafast recovery time.
The planar structure and the platinum doped life time control, guarantee the best overall performance, ruggedness and reliability characteristics.
These devices are intended for use in the output rectification stage of SMPS, UPS, DC/DC converters as well as freewheeling diode in low voltage inverters and chopper motor drives.
Their extremely optimized stored charge and low recovery current minimize the switching losses and reduce over dissipation in the switching element and snubbers.

PRODUCT SUMMARY	
Package	TO-263AB (D^2PAK), TO-262AA
$I_{F(AV)}$	2 x 8 A
V_R	200 V
V_F at I_F	0.895 V
t_{rr}	35 ns
T_J max.	175 °C
Diode variation	Common cathode

ABSOLUTE MAXIMUM RATINGS

PARAMETER		SYMBOL	TEST CONDITIONS	MAX.	UNITS
Peak repetitive reverse voltage		V_{RRM}		200	V
Average rectified forward current	per leg	$I_{F(AV)}$		8.0	A
	total device		Rated V_R, T_C = 150 °C	16	
Non-repetitive peak surge current per leg		I_{FSM}		100	
Peak repetitive forward current per leg		I_{FM}	Rated V_R, square wave, 20 kHz, T_C = 150 °C	16	
Operating junction and storage temperatures		T_J, T_{Stg}		-65 to +175	°C

ELECTRICAL SPECIFICATIONS (T_J = 25 °C unless otherwise specified)

PARAMETER	SYMBOL	TEST CONDITIONS	MIN.	TYP.	MAX.	UNITS
Breakdown voltage, blocking voltage	V_{BR}, V_R	I_R = 100 µA	200	-	-	V
Forward voltage	V_F	I_F = 8 A	-	-	0.975	
		I_F = 8 A, T_J = 150 °C	-	-	0.895	
Reverse leakage current	I_R	V_R = V_R rated	-	-	5	µA
		T_J = 150 °C, V_R = V_R rated	-	-	250	
Junction capacitance	C_T	V_R = 200 V	-	25	-	pF
Series inductance	L_S	Measured lead to lead 5 mm from package body	-	8.0	-	nH

For technical questions within your region: DiodesAmericas@vishay.com, DiodesAsia@vishay.com, DiodesEurope@vishay.com
THIS DOCUMENT IS SUBJECT TO CHANGE WITHOUT NOTICE. THE PRODUCTS DESCRIBED HEREIN AND THIS DOCUMENT ARE SUBJECT TO SPECIFIC DISCLAIMERS, SET FORTH AT www.vishay.com/doc?91000

DYNAMIC RECOVERY CHARACTERISTICS (T_J = 25 °C unless otherwise specified)							
PARAMETER	**SYMBOL**	**TEST CONDITIONS**		**MIN.**	**TYP.**	**MAX.**	**UNITS**
Reverse recovery time	t_{rr}	I_F = 1.0 A, dI_F/dt = 50 A/μs, V_R = 30 V		-	-	35	ns
		I_F = 0.5 A, I_R = 1.0 A, I_{REC} = 0.25 A		-	-	25	
		T_J = 25 °C	I_F = 8 A dI_F/dt = 200 A/μs V_R = 160 V	-	20	-	
		T_J = 125 °C		-	34	-	
Peak recovery current	I_{RRM}	T_J = 25 °C		-	1.7	-	A
		T_J = 125 °C		-	4.2	-	
Reverse recovery charge	Q_{rr}	T_J = 25 °C		-	23	-	nC
		T_J = 125 °C		-	75	-	

THERMAL - MECHANICAL SPECIFICATIONS						
PARAMETER	**SYMBOL**	**TEST CONDITIONS**	**MIN.**	**TYP.**	**MAX.**	**UNITS**
Maximum junction and storage temperature range	T_J, T_{Stg}		-65	-	175	°C
Thermal resistance, junction to case per leg	R_{thJC}		-	-	3.0	°C/W
Thermal resistance, junction to ambient per leg	R_{thJA}		-	-	50	
Thermal resistance, case to heatsink	R_{thCS}	Mounting surface, flat, smooth and greased	-	0.5	-	
Weight			-	2.0	-	g
			-	0.07	-	oz.
Mounting torque			6.0 (5.0)	-	12 (10)	kgf · cm (lbf · in)
Marking device		Case style TO-263AB (D^2PAK)	MURB1620CT			
		Case style TO-262	MURB1620CT-1			

For technical questions within your region: DiodesAmericas@vishay.com, DiodesAsia@vishay.com, DiodesEurope@vishay.com
THIS DOCUMENT IS SUBJECT TO CHANGE WITHOUT NOTICE. THE PRODUCTS DESCRIBED HEREIN AND THIS DOCUMENT ARE SUBJECT TO SPECIFIC DISCLAIMERS, SET FORTH AT www.vishay.com/doc?91000

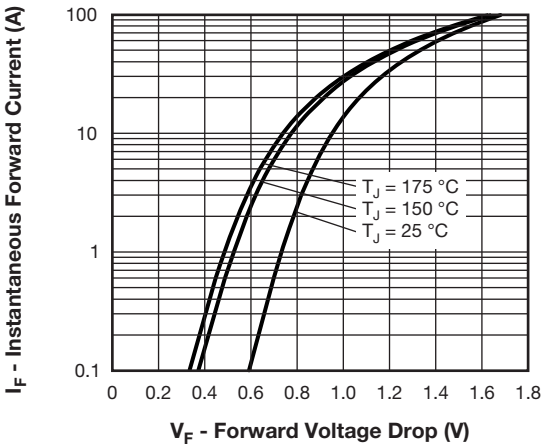

Fig. 1 - Typical Forward Voltage Drop Characteristics

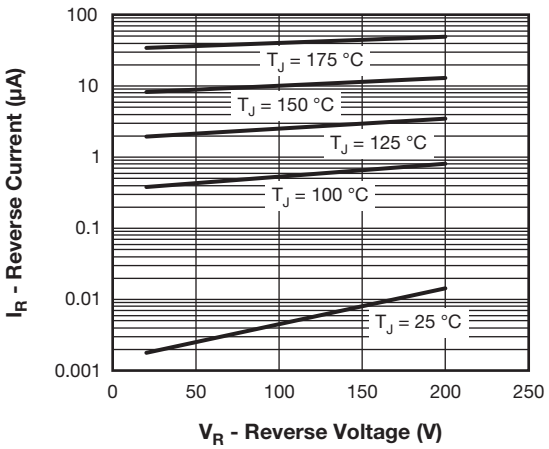

Fig. 2 - Typical Values of Reverse Current vs. Reverse Voltage

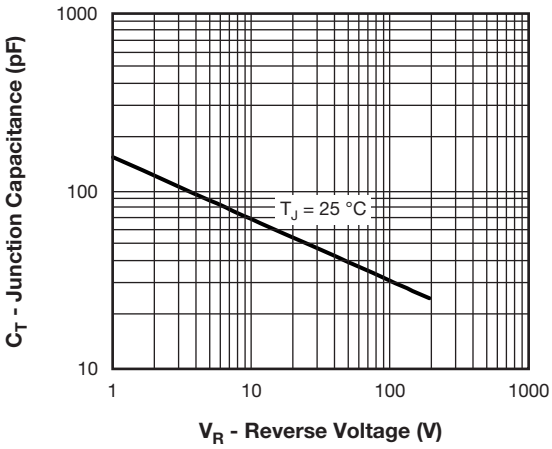

Fig. 3 - Typical Junction Capacitance vs. Reverse Voltage

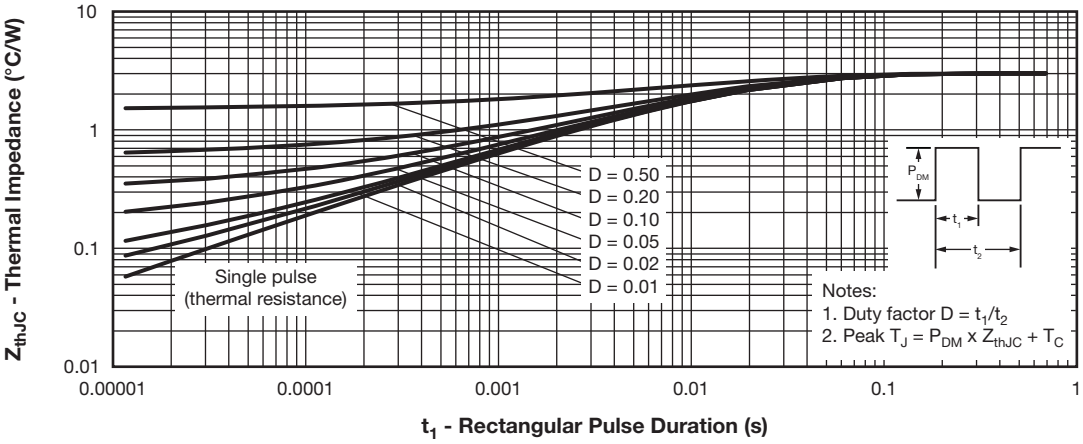

Fig. 4 - Maximum Thermal Impedance Z_{thJC} Characteristics

For technical questions within your region: DiodesAmericas@vishay.com, DiodesAsia@vishay.com, DiodesEurope@vishay.com
THIS DOCUMENT IS SUBJECT TO CHANGE WITHOUT NOTICE. THE PRODUCTS DESCRIBED HEREIN AND THIS DOCUMENT ARE SUBJECT TO SPECIFIC DISCLAIMERS, SET FORTH AT www.vishay.com/doc?91000

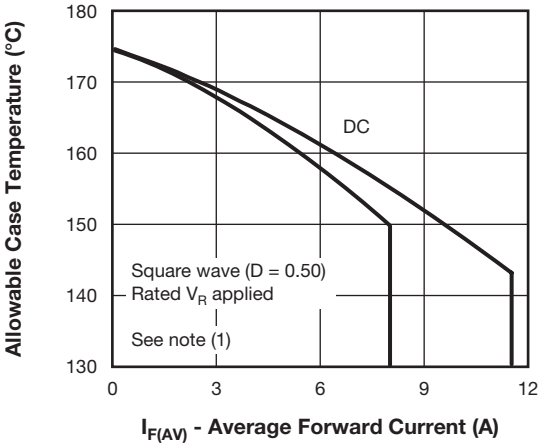

Fig. 5 - Maximum Allowable Case Temperature vs. Average Forward Current

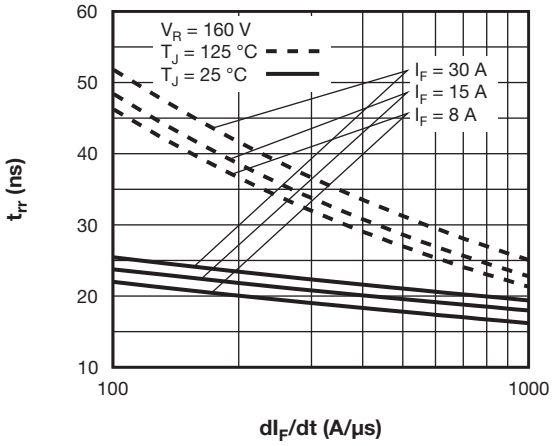

Fig. 7 - Typical Reverse Recovery Time vs. dI_F/dt

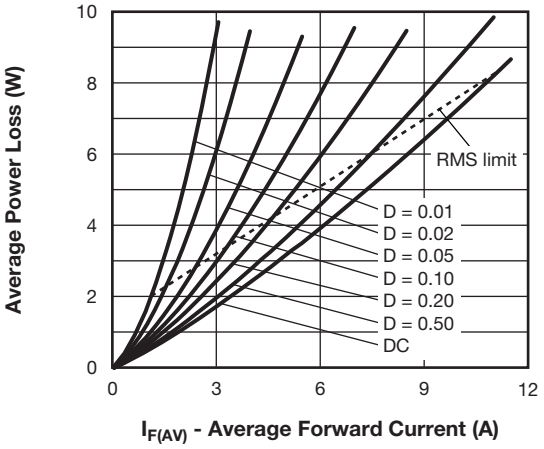

Fig. 6 - Forward Power Loss Characteristics

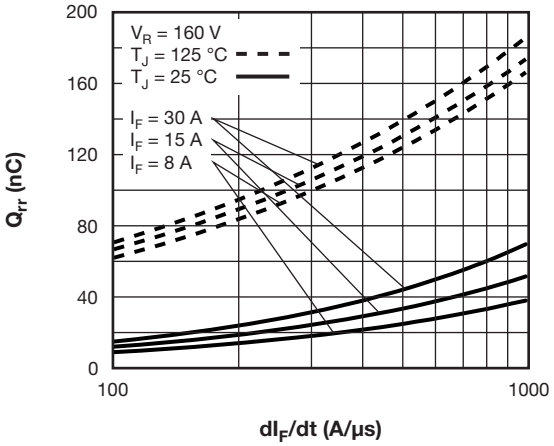

Fig. 8 - Typical Stored Charge vs. dI_F/dt

Note

(1) Formula used: $T_C = T_J - (Pd + Pd_{REV}) \times R_{thJC}$;
Pd = Forward power loss = $I_{F(AV)} \times V_{FM}$ at $(I_{F(AV)}/D)$ (see fig. 6);
Pd_{REV} = Inverse power loss = $V_{R1} \times I_R (1 - D)$; I_R at V_{R1} = Rated V_R

For technical questions within your region: DiodesAmericas@vishay.com, DiodesAsia@vishay.com, DiodesEurope@vishay.com
THIS DOCUMENT IS SUBJECT TO CHANGE WITHOUT NOTICE. THE PRODUCTS DESCRIBED HEREIN AND THIS DOCUMENT ARE SUBJECT TO SPECIFIC DISCLAIMERS, SET FORTH AT www.vishay.com/doc?91000

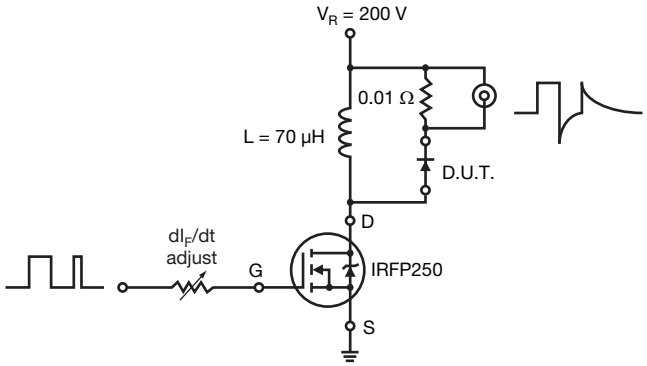

Fig. 9 - Reverse Recovery Parameter Test Circuit

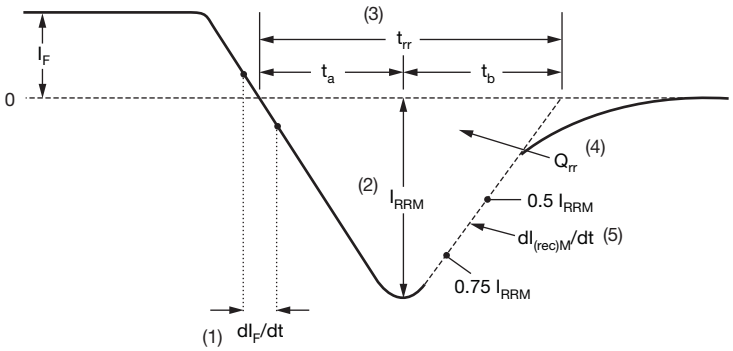

(1) dI_F/dt - rate of change of current through zero crossing

(2) I_{RRM} - peak reverse recovery current

(3) t_{rr} - reverse recovery time measured from zero crossing point of negative going I_F to point where a line passing through 0.75 I_{RRM} and 0.50 I_{RRM} extrapolated to zero current.

(4) Q_{rr} - area under curve defined by t_{rr} and I_{RRM}

$$Q_{rr} = \frac{t_{rr} \times I_{RRM}}{2}$$

(5) $dI_{(rec)M}/dt$ - peak rate of change of current during t_b portion of t_{rr}

Fig. 10 - Reverse Recovery Waveform and Definitions

For technical questions within your region: DiodesAmericas@vishay.com, DiodesAsia@vishay.com, DiodesEurope@vishay.com
THIS DOCUMENT IS SUBJECT TO CHANGE WITHOUT NOTICE. THE PRODUCTS DESCRIBED HEREIN AND THIS DOCUMENT ARE SUBJECT TO SPECIFIC DISCLAIMERS, SET FORTH AT www.vishay.com/doc?91000

ORDERING INFORMATION TABLE

Device code	VS-	MUR	B	16	20	CT	-1	TRL	P
	1	2	3	4	5	6	7	8	9

1 - Vishay Semiconductors product
2 - Ultrafast MUR series
3 - B = D^2PAK/TO-262
4 - Current rating (16 = 16 A)
5 - Voltage rating (20 = 200 V)
6 - CT = center tap (dual)
7 - • None = D^2PAK
• -1 = TO-262
8 - • None = tube (50 pieces)
• TRL = tape and reel (left oriented, for D^2PAK package)
• TRR = tape and reel (right oriented, for D^2PAK package)
9 - • PbF = lead (Pb)-free (for TO-262 and D^2PAK tube)
• P = lead (Pb)-free (for D^2PAK TRR and TRL)

LINKS TO RELATED DOCUMENTS	
Dimensions	www.vishay.com/doc?95014
Part marking information	www.vishay.com/doc?95008
Packaging information	www.vishay.com/doc?95032

For technical questions within your region: DiodesAmericas@vishay.com, DiodesAsia@vishay.com, DiodesEurope@vishay.com
THIS DOCUMENT IS SUBJECT TO CHANGE WITHOUT NOTICE. THE PRODUCTS DESCRIBED HEREIN AND THIS DOCUMENT ARE SUBJECT TO SPECIFIC DISCLAIMERS, SET FORTH AT www.vishay.com/doc?91000

D²PAK, TO-262

DIMENSIONS FOR D²PAK in millimeters and inches

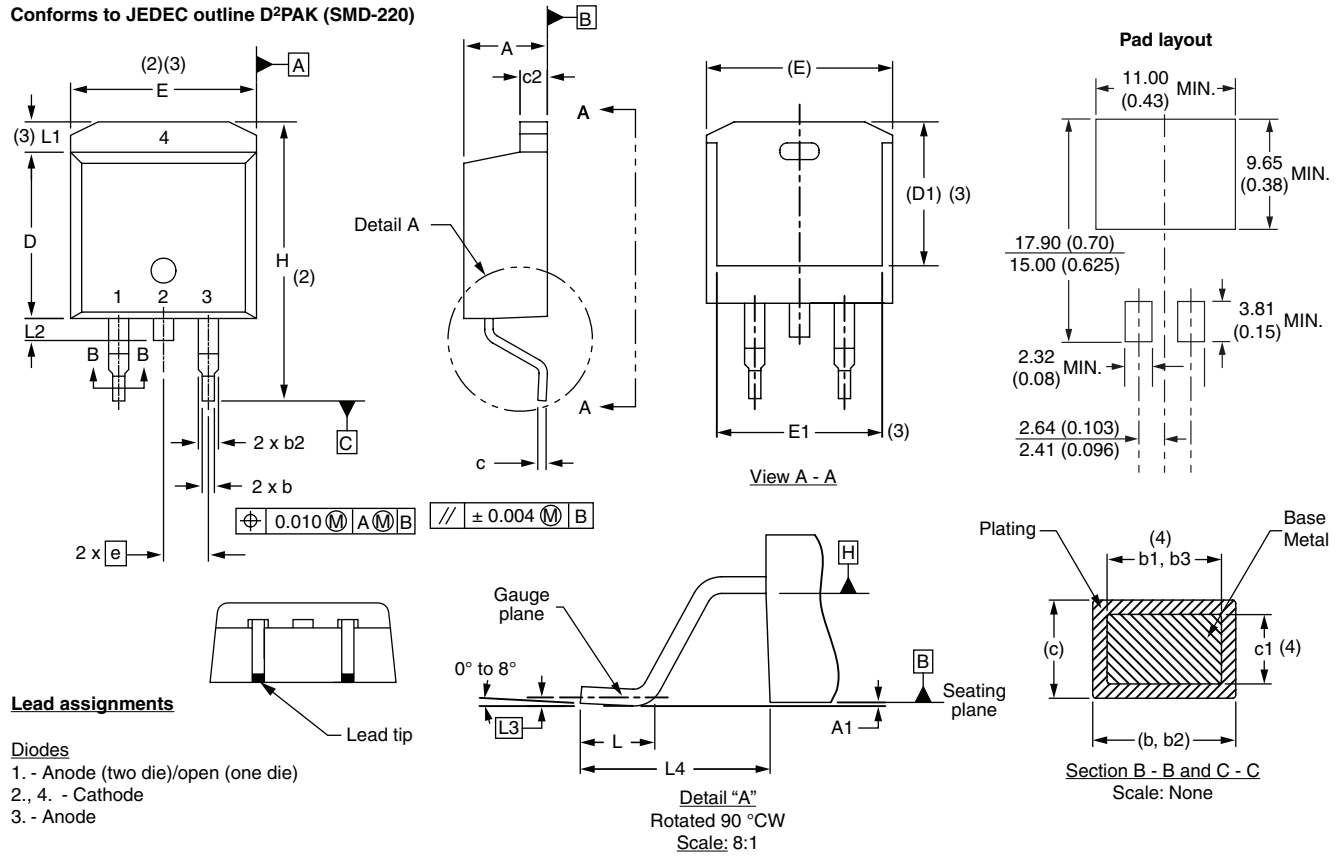

Lead assignments

Diodes
1. - Anode (two die)/open (one die)
2., 4. - Cathode
3. - Anode

SYMBOL	MILLIMETERS		INCHES		NOTES
	MIN.	MAX.	MIN.	MAX.	
A	4.06	4.83	0.160	0.190	
A1	0.00	0.254	0.000	0.010	
b	0.51	0.99	0.020	0.039	
b1	0.51	0.89	0.020	0.035	4
b2	1.14	1.78	0.045	0.070	
b3	1.14	1.73	0.045	0.068	4
c	0.38	0.74	0.015	0.029	
c1	0.38	0.58	0.015	0.023	4
c2	1.14	1.65	0.045	0.065	
D	8.51	9.65	0.335	0.380	2

SYMBOL	MILLIMETERS		INCHES		NOTES
	MIN.	MAX.	MIN.	MAX.	
D1	6.86	8.00	0.270	0.315	3
E	9.65	10.67	0.380	0.420	2, 3
E1	7.90	8.80	0.311	0.346	3
e	2.54 BSC		0.100 BSC		
H	14.61	15.88	0.575	0.625	
L	1.78	2.79	0.070	0.110	
L1	-	1.65	-	0.066	3
L2	1.27	1.78	0.050	0.070	
L3	0.25 BSC		0.010 BSC		
L4	4.78	5.28	0.188	0.208	

Notes

(1) Dimensioning and tolerancing per ASME Y14.5 M-1994
(2) Dimension D and E do not include mold flash. Mold flash shall not exceed 0.127 mm (0.005") per side. These dimensions are measured at the outmost extremes of the plastic body
(3) Thermal pad contour optional within dimension E, L1, D1 and E1
(4) Dimension b1 and c1 apply to base metal only
(5) Datum A and B to be determined at datum plane H
(6) Controlling dimension: inch
(7) Outline conforms to JEDEC outline TO-263AB

DIMENSIONS FOR TO-262 in millimeters and inches

Modified JEDEC outline TO-262

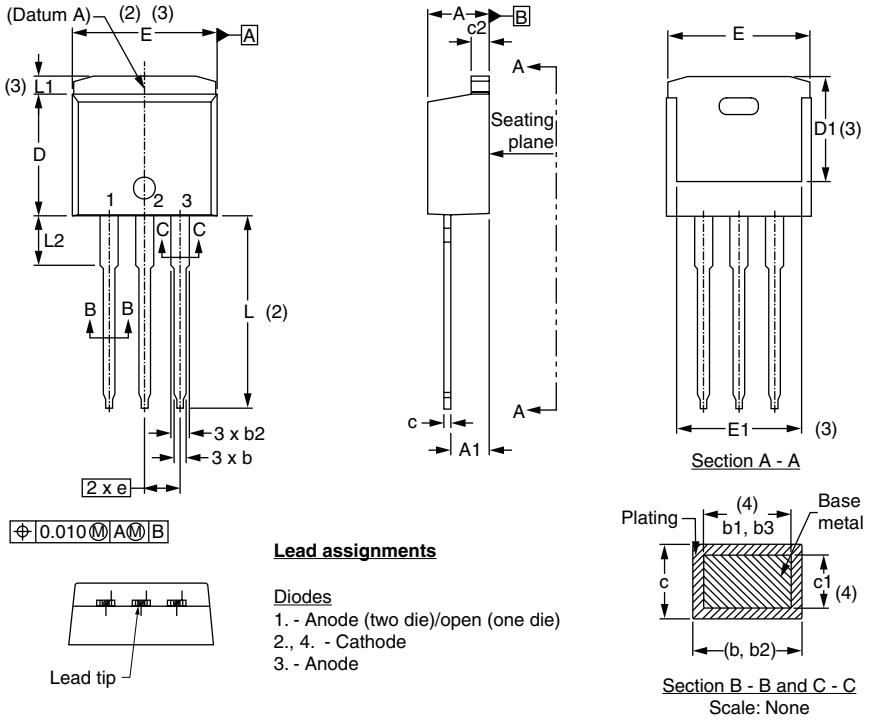

Lead assignments

Diodes
1. - Anode (two die)/open (one die)
2., 4. - Cathode
3. - Anode

SYMBOL	MILLIMETERS		INCHES		NOTES
	MIN.	MAX.	MIN.	MAX.	
A	4.06	4.83	0.160	0.190	
A1	2.03	3.02	0.080	0.119	
b	0.51	0.99	0.020	0.039	
b1	0.51	0.89	0.020	0.035	4
b2	1.14	1.78	0.045	0.070	
b3	1.14	1.73	0.045	0.068	4
c	0.38	0.74	0.015	0.029	
c1	0.38	0.58	0.015	0.023	4
c2	1.14	1.65	0.045	0.065	
D	8.51	9.65	0.335	0.380	2
D1	6.86	8.00	0.270	0.315	3
E	9.65	10.67	0.380	0.420	2, 3
E1	7.90	8.80	0.311	0.346	3
e	2.54 BSC		0.100 BSC		
L	13.46	14.10	0.530	0.555	
L1	-	1.65	-	0.065	3
L2	3.56	3.71	0.140	0.146	

Notes

(1) Dimensioning and tolerancing as per ASME Y14.5M-1994
(2) Dimension D and E do not include mold flash. Mold flash shall not exceed 0.127 mm (0.005") per side. These dimensions are measured at the outmost extremes of the plastic body
(3) Thermal pad contour optional within dimension E, L1, D1 and E1
(4) Dimension b1 and c1 apply to base metal only
(5) Controlling dimension: inches
(6) Outline conform to JEDEC TO-262 except A1 (maximum), b (minimum) and D1 (minimum) where dimensions derived the actual package outline

Disclaimer

ALL PRODUCT, PRODUCT SPECIFICATIONS AND DATA ARE SUBJECT TO CHANGE WITHOUT NOTICE TO IMPROVE RELIABILITY, FUNCTION OR DESIGN OR OTHERWISE.

Vishay Intertechnology, Inc., its affiliates, agents, and employees, and all persons acting on its or their behalf (collectively, "Vishay"), disclaim any and all liability for any errors, inaccuracies or incompleteness contained in any datasheet or in any other disclosure relating to any product.

Vishay makes no warranty, representation or guarantee regarding the suitability of the products for any particular purpose or the continuing production of any product. To the maximum extent permitted by applicable law, Vishay disclaims (i) any and all liability arising out of the application or use of any product, (ii) any and all liability, including without limitation special, consequential or incidental damages, and (iii) any and all implied warranties, including warranties of fitness for particular purpose, non-infringement and merchantability.

Statements regarding the suitability of products for certain types of applications are based on Vishay's knowledge of typical requirements that are often placed on Vishay products in generic applications. Such statements are not binding statements about the suitability of products for a particular application. It is the customer's responsibility to validate that a particular product with the properties described in the product specification is suitable for use in a particular application. Parameters provided in datasheets and / or specifications may vary in different applications and performance may vary over time. All operating parameters, including typical parameters, must be validated for each customer application by the customer's technical experts. Product specifications do not expand or otherwise modify Vishay's terms and conditions of purchase, including but not limited to the warranty expressed therein.

Except as expressly indicated in writing, Vishay products are not designed for use in medical, life-saving, or life-sustaining applications or for any other application in which the failure of the Vishay product could result in personal injury or death. Customers using or selling Vishay products not expressly indicated for use in such applications do so at their own risk. Please contact authorized Vishay personnel to obtain written terms and conditions regarding products designed for such applications.

No license, express or implied, by estoppel or otherwise, to any intellectual property rights is granted by this document or by any conduct of Vishay. Product names and markings noted herein may be trademarks of their respective owners.