FAIRCHILD™

Is Now Part of

ON Semiconductor®

To learn more about ON Semiconductor, please visit our website at
www.onsemi.com

ON Semiconductor and the ON Semiconductor logo are trademarks of Semiconductor Components Industries, LLC dba ON Semiconductor or its subsidiaries in the United States and/or other countries. ON Semiconductor owns the rights to a number of patents, trademarks, copyrights, trade secrets, and other intellectual property. A listing of ON Semiconductor's product/patent coverage may be accessed at www.onsemi.com/site/pdf/Patent-Marking.pdf. ON Semiconductor reserves the right to make changes without further notice to any products herein. ON Semiconductor makes no warranty, representation or guarantee regarding the suitability of its products for any particular purpose, nor does ON Semiconductor assume any liability arising out of the application or use of any product or circuit, and specifically disclaims any and all liability, including without limitation special, consequential or incidental damages. Buyer is responsible for its products and applications using ON Semiconductor products, including compliance with all laws, regulations and safety requirements or standards, regardless of any support or applications information provided by ON Semiconductor. "Typical" parameters which may be provided in ON Semiconductor data sheets and/or specifications can and do vary in different applications and actual performance may vary over time. All operating parameters, including "Typicals" must be validated for each customer application by customer's technical experts. ON Semiconductor does not convey any license under its patent rights nor the rights of others. ON Semiconductor products are not designed, intended, or authorized for use as a critical component in life support systems or any FDA Class 3 medical devices or medical devices with a same or similar classification in a foreign jurisdiction or any devices intended for implantation in the human body. Should Buyer purchase or use ON Semiconductor products for any such unintended or unauthorized application, Buyer shall indemnify and hold ON Semiconductor and its officers, employees, subsidiaries, affiliates, and distributors harmless against all claims, costs, damages, and expenses, and reasonable attorney fees arising out of, directly or indirectly, any claim of personal injury or death associated with such unintended or unauthorized use, even if such claim alleges that ON Semiconductor was negligent regarding the design or manufacture of the part. ON Semiconductor is an Equal Opportunity/Affirmative Action Employer. This literature is subject to all applicable copyright laws and is not for resale in any manner.

October 2014

MBR0540
Schottky Rectifier

Features

- 0.5 A, Low Forward Voltage less than 460 mV
- 400 mW Power Dissipation Package
- Compact Surface Mount Package with The Same Footprint as Mini-melf

SOD-123
* Band marking denotes cathode

Ordering Information

Part Number	Top Mark	Package	Packing Method
MBR0540	B4	SOD-123 2L	Tape and Reel

Absolute Maximum Ratings

Stresses exceeding the absolute maximum ratings may damage the device. The device may not function or be operable above the recommended operating conditions and stressing the parts to these levels is not recommended. In addition, extended exposure to stresses above the recommended operating conditions may affect device reliability. The absolute maximum ratings are stress ratings only. Values are at T_A = 25°C unless otherwise noted.

Symbol	Parameter	Value	Unit
V_{RRM}	Maximum Repetitive Reverse Voltage	40	V
$I_{F(AV)}$	Average Rectified Forward Current	500	mA
I_{FSM}	Non Repetitive Peak Forward Current (Surge Applied at Rated Load Conditions Half-Wave, Single-Phase, 60 Hz)	5.5	A
T_{STG}	Storage Temperature Range	-65 to +150	°C
T_{Jmax}	Operating Junction Temperature	-65 to +125	°C

© 2001 Fairchild Semiconductor Corporation

Thermal Characteristics

Values are at T_A = 25°C unless otherwise noted.

Symbol	Parameter	Value	Unit
$R_{\theta JA}$	Thermal Resistance, Junction-to-Ambient(1)	206	°C/W
$R_{\theta JL}$	Thermal Resistance, Junction-to-Lead(2)	118	°C/W

Notes:

1. 1.0 inch pad size (1.0 x 0.5 inch for each lead) on FR4 board.
2. Device is mounted on FR-4 PCB 0.013 mm.

Electrical Characteristics

Values are at T_A = 25°C unless otherwise noted.

Symbol	Parameter	Conditions	Min.	Max.	Unit
V_F	Forward Voltage	I_F = 500 mA		510	mV
		I_F = 500 mA, T_A = 100°C		460	
		I_F = 1.0 A		620	
		I_F = 1.0 A, T_A = 100°C		610	
I_R	Reverse Current	V_R = 20 V		10	µA
		V_R = 20 V, T_A = 100°C		5.0	mA
		V_R = 40 V		20	µA
		V_R = 40 V, T_A = 100°C		13	mA

© 2001 Fairchild Semiconductor Corporation

Typical Performance Characteristics

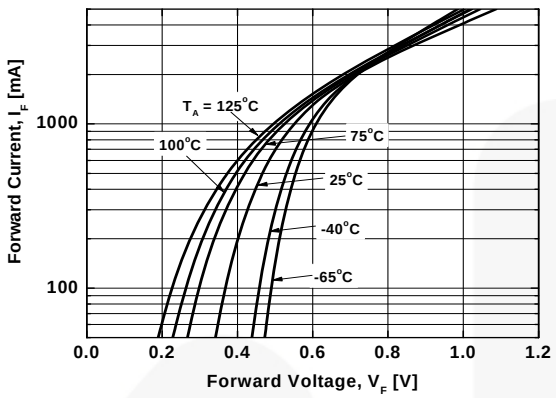

Figure 1. Forward Current vs. Forward Voltage

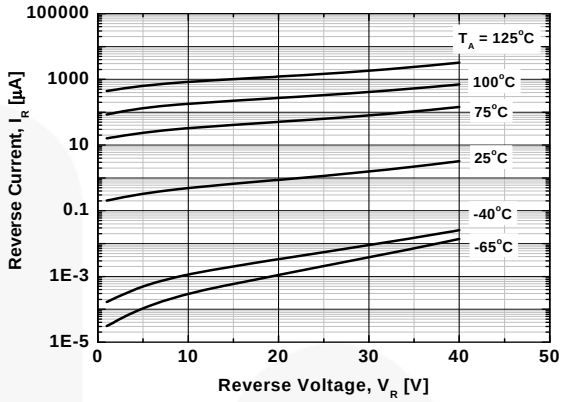

Figure 2. Reverse Current vs. Reverse Voltage

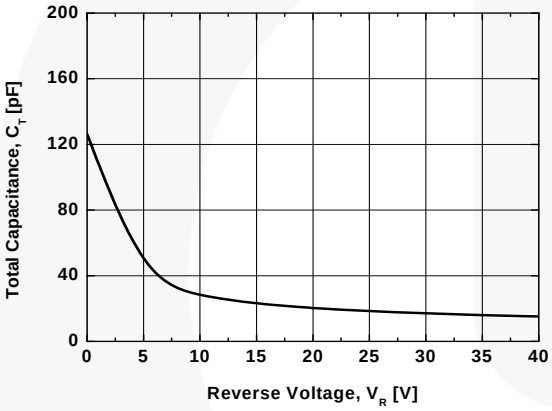

Figure 3. Total Capacitance

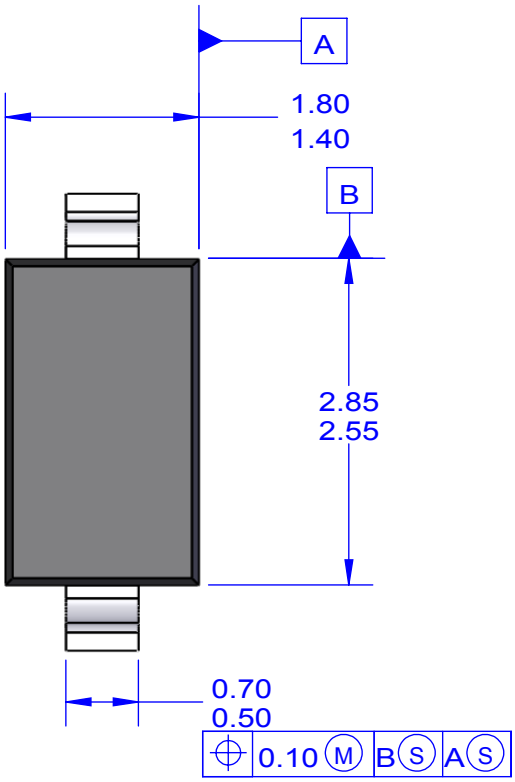

TOP VIEW

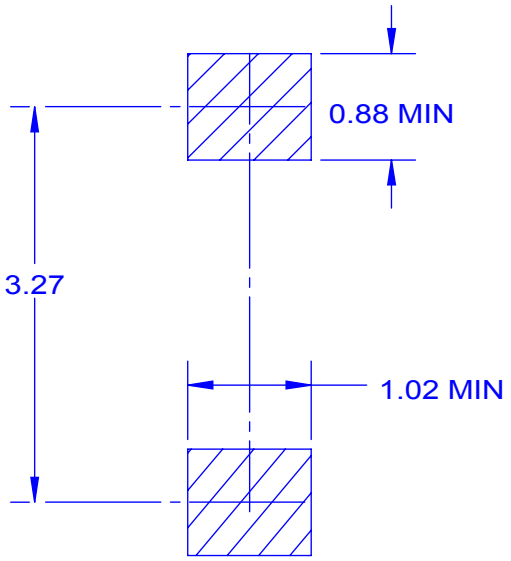

LAND PATTERN
RECOMMENDATION

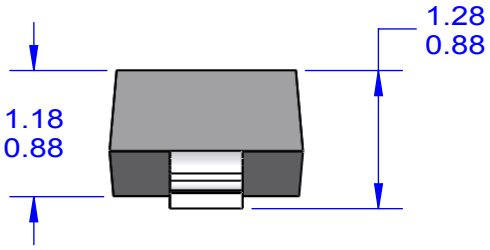

FRONT VIEW

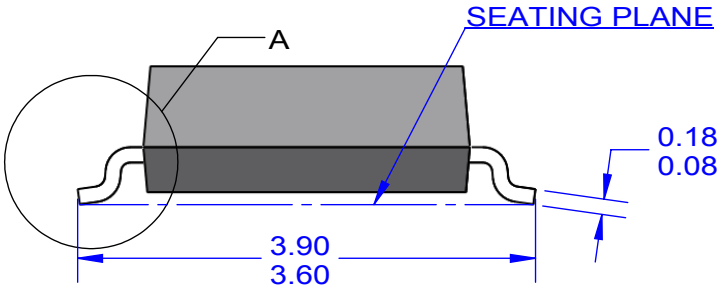

SIDE VIEW

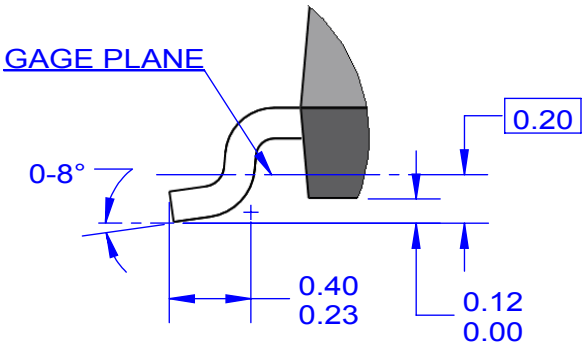

DETAIL "A"
SCALE 2:1

NOTES: UNLESS OTHERWISE SPECIFIED

A) PACKAGE REFERENCE: JEDEC, DO-215 ISSUE D, VARIATION AD.

B) ALL DIMENSIONS ARE IN MILLIMETERS.

C) DIMENSIONING AND TOLERANCING PER ASME Y14.5M-1994.

E) DRAWING FILE NAME: MA02AREV4

ON Semiconductor and ON are trademarks of Semiconductor Components Industries, LLC dba ON Semiconductor or its subsidiaries in the United States and/or other countries. ON Semiconductor owns the rights to a number of patents, trademarks, copyrights, trade secrets, and other intellectual property. A listing of ON Semiconductor's product/patent coverage may be accessed at www.onsemi.com/site/pdf/Patent−Marking.pdf. ON Semiconductor reserves the right to make changes without further notice to any products herein. ON Semiconductor makes no warranty, representation or guarantee regarding the suitability of its products for any particular purpose, nor does ON Semiconductor assume any liability arising out of the application or use of any product or circuit, and specifically disclaims any and all liability, including without limitation special, consequential or incidental damages. Buyer is responsible for its products and applications using ON Semiconductor products, including compliance with all laws, regulations and safety requirements or standards, regardless of any support or applications information provided by ON Semiconductor. "Typical" parameters which may be provided in ON Semiconductor data sheets and/or specifications can and do vary in different applications and actual performance may vary over time. All operating parameters, including "Typicals" must be validated for each customer application by customer's technical experts. ON Semiconductor does not convey any license under its patent rights nor the rights of others. ON Semiconductor products are not designed, intended, or authorized for use as a critical component in life support systems or any FDA Class 3 medical devices or medical devices with a same or similar classification in a foreign jurisdiction or any devices intended for implantation in the human body. Should Buyer purchase or use ON Semiconductor products for any such unintended or unauthorized application, Buyer shall indemnify and hold ON Semiconductor and its officers, employees, subsidiaries, affiliates, and distributors harmless against all claims, costs, damages, and expenses, and reasonable attorney fees arising out of, directly or indirectly, any claim of personal injury or death associated with such unintended or unauthorized use, even if such claim alleges that ON Semiconductor was negligent regarding the design or manufacture of the part. ON Semiconductor is an Equal Opportunity/Affirmative Action Employer. This literature is subject to all applicable copyright laws and is not for resale in any manner.

PUBLICATION ORDERING INFORMATION

LITERATURE FULFILLMENT:
Literature Distribution Center for ON Semiconductor
19521 E. 32nd Pkwy, Aurora, Colorado 80011 USA
Phone: 303−675−2175 or 800−344−3860 Toll Free USA/Canada
Fax: 303−675−2176 or 800−344−3867 Toll Free USA/Canada
Email: orderlit@onsemi.com

N. American Technical Support: 800−282−9855 Toll Free USA/Canada
Europe, Middle East and Africa Technical Support:
Phone: 421 33 790 2910
Japan Customer Focus Center
Phone: 81−3−5817−1050

ON Semiconductor Website: **www.onsemi.com**

Order Literature: http://www.onsemi.com/orderlit

For additional information, please contact your local Sales Representative