FAIRCHILD™

Is Now Part of

ON Semiconductor®

To learn more about ON Semiconductor, please visit our website at
www.onsemi.com

ON Semiconductor and the ON Semiconductor logo are trademarks of Semiconductor Components Industries, LLC dba ON Semiconductor or its subsidiaries in the United States and/or other countries. ON Semiconductor owns the rights to a number of patents, trademarks, copyrights, trade secrets, and other intellectual property. A listing of ON Semiconductor's product/patent coverage may be accessed at www.onsemi.com/site/pdf/Patent-Marking.pdf. ON Semiconductor reserves the right to make changes without further notice to any products herein. ON Semiconductor makes no warranty, representation or guarantee regarding the suitability of its products for any particular purpose, nor does ON Semiconductor assume any liability arising out of the application or use of any product or circuit, and specifically disclaims any and all liability, including without limitation special, consequential or incidental damages. Buyer is responsible for its products and applications using ON Semiconductor products, including compliance with all laws, regulations and safety requirements or standards, regardless of any support or applications information provided by ON Semiconductor. "Typical" parameters which may be provided in ON Semiconductor data sheets and/or specifications can and do vary in different applications and actual performance may vary over time. All operating parameters, including "Typicals" must be validated for each customer application by customer's technical experts. ON Semiconductor does not convey any license under its patent rights nor the rights of others. ON Semiconductor products are not designed, intended, or authorized for use as a critical component in life support systems or any FDA Class 3 medical devices or medical devices with a same or similar classification in a foreign jurisdiction or any devices intended for implantation in the human body. Should Buyer purchase or use ON Semiconductor products for any such unintended or unauthorized application, Buyer shall indemnify and hold ON Semiconductor and its officers, employees, subsidiaries, affiliates, and distributors harmless against all claims, costs, damages, and expenses, and reasonable attorney fees arising out of, directly or indirectly, any claim of personal injury or death associated with such unintended or unauthorized use, even if such claim alleges that ON Semiconductor was negligent regarding the design or manufacture of the part. ON Semiconductor is an Equal Opportunity/Affirmative Action Employer. This literature is subject to all applicable copyright laws and is not for resale in any manner.

FAIRCHILD SEMICONDUCTOR®

December 2013

FPDB30PH60

PFC SPM® 3 Series for 2-Phase Bridgeless PFC

Features

- UL Certified No. E209204 (UL1557)
- 600 V - 30 A 2-Phase Bridgeless PFC with Integral Gate Driver and Protection
- Very Low Thermal Resistance Using Al_2O_3 DBC Substrate
- Built-in NTC Thermistor for Temperature Monitoring
- Built-in Shunt Resistor for Current Sensing
- Optimized for 20kHz Switching Frequency
- Isolation Rating: 2500 Vrms/min.

Applications

- 2-Phase Bridgeless PFC Converter

Related Source

- *AN-9041 - Bridgeless PFC SPM 3 Series Design Guide*

General Description

The FPDB30PH60 is a PFC SPM® 3 module providing a fully-featured, high-performance Bridgeless PFC (Power Factor Correction) input power stage for consumer, medical, and industrial applications. These modules integrate optimized gate drive of the built-in IGBTs to minimize EMI and losses, while also providing multiple on-module protection features including under-voltage lockout, over-current shutdown, thermal monitoring, and fault reporting. These modules also feature high-performance output diodes and shunt resistor for additional space savings and mounting convenience.

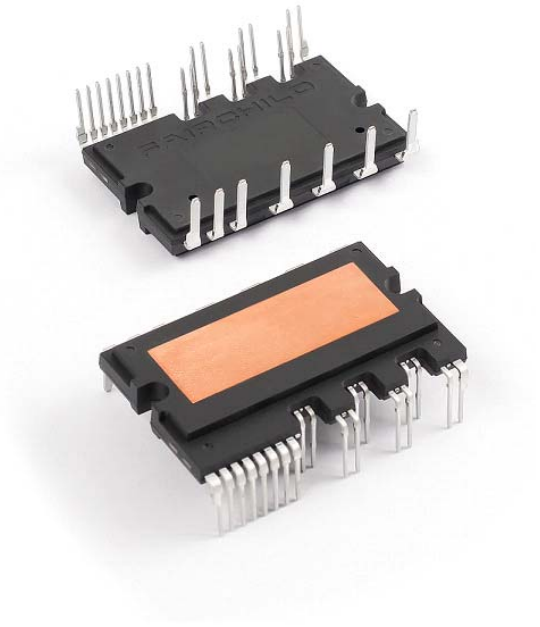

Figure 1. Package Overview

Package Marking & Ordering Information

Device	Device Marking	Package	Packing Type	Quantity
FPDB30PH60	FPDB30PH60	SPMGA-027	Rail	10

Integrated Power Functions

- PFC converter for single-phase AC / DC power conversion.(please refer to Figure 3)

Integrated Drive, Protection and System Control Functions

- For IGBTs: gate drive circuit, Over-Current Protection (OCP), control supply circuit Under-Voltage Lock-Out (UVLO) Protection
- Fault signal: corresponding to OC and UV fault
- Built-in thermistor: temperature monitoring
- Input interface: active-HIGH interface, works with 3.3 / 5 V logic, Schmitt-trigger input

Pin Configuration

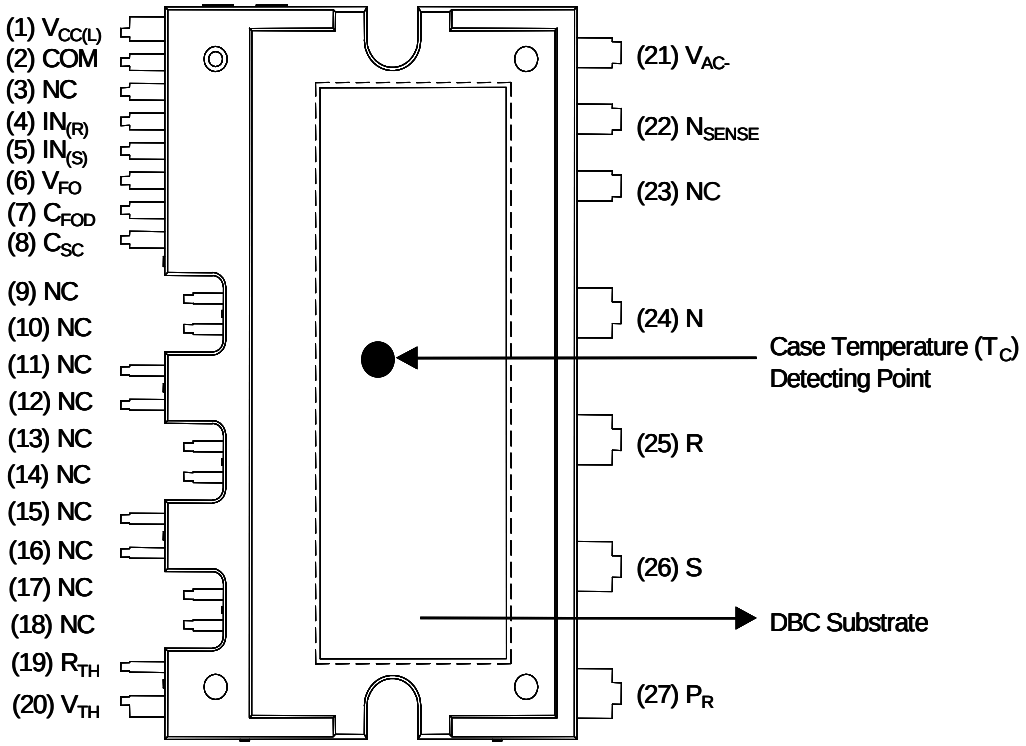

Figure 2. Top View

Pin Descriptions

Pin Number	Pin Name	Pin Description
1	V_{CC}	Common Bias Voltage for IC and IGBTs Driving
2	COM	Common Supply Ground
4	$IN_{(R)}$	Signal Input for Low-Side R-Phase IGBT
5	$IN_{(S)}$	Signal Input for Low-Side S-Phase IGBT
6	V_{FO}	Fault Output
7	C_{FOD}	Capacitor for Fault Output Duration Selection
8	C_{SC}	Capacitor(Low-Pass Filter) for Over-Current Detection
19	$R_{(TH)}$	Series Resistor for The Use of Thermistor
20	$V_{(TH)}$	Thermistor Bias Voltage
21	V_{AC-}	Current Sensing Terminal
22	N_{SENSE}	Current Sensing Reference Terminal
24	N	Negative Rail of DC-Link
25	R	Output for R-Phase
26	S	Output for S-Phase
27	P_R	Positive Rail of DC-Link
3, 9~18, 23	NC	No Connection

Internal Equivalent Circuit

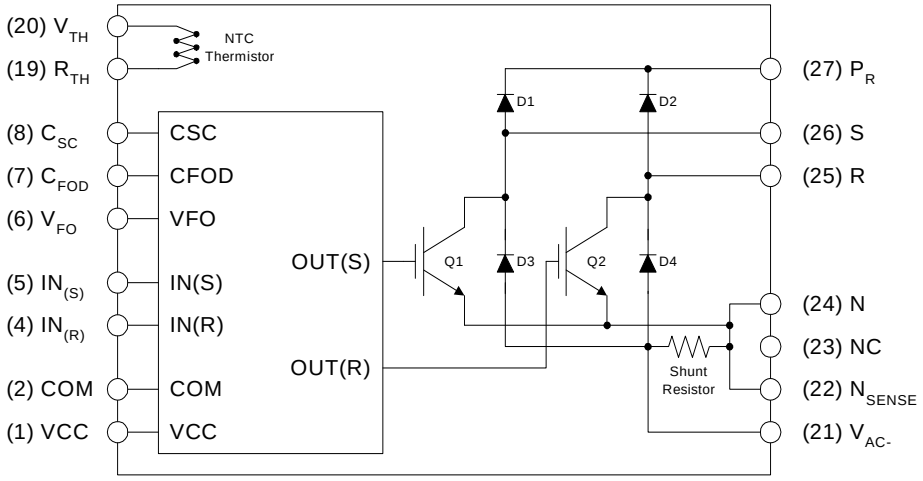

Figure 3. Internal Block Diagram

Notes:

1. Converter is composed of two IGBTs including four diodes and one IC which has gate driving and protection functions.

Absolute Maximum Ratings (T_J = 25°C, unless otherwise specified.)

Converter Part

Symbol	Item	Condition	Rating	Unit
V_i	Supply Voltage	Applied between R - S	264	V_{rms}
$V_{i(Surge)}$	Supply Voltage (Surge)	Applied between R - S	500	V
V_{PN}	Output Voltage	Applied between P - N	450	V
$V_{PN(Surge)}$	Output Voltage (Surge)	Applied between P - N	500	V
V_{CES}	Collector - Emitter Voltage		600	V
I_i	Input Current (100% Load)	T_C < 95°C, V_i = 220 V, V_{PN} = 390 V, V_{PWM} = 20 kHz	20	A
$I_{i(125\%)}$	Input Current (125% Load)	T_C < 95°C, V_i = 220V , V_{PN} = 390 V, V_{PWM} = 20 kHz, 1 min Non-Repetitive	25	A
P_C	Collector Dissipation	T_C = 25°C per IGBT	83	W
P_{RSH}	Power Rating of Shunt Resistor	T_C < 125°C	2	W
T_J	Operating Junction Temperature	(Note 2)	-20 ~ 125	°C

Notes:
2. The maximum junction temperature rating of the power chips integrated within the PFC SPM® product is 150 °C(@$T_C \leq$ 100°C). However, to insure safe operation of the PFC SPM product, the average junction temperature should be limited to $T_{J(ave)} \leq$ 125°C (@$T_C \leq$ 100°C)

Control Part

Symbol	Item	Condition	Rating	Unit
V_{CC}	Control Supply Voltage	Applied between V_{CC} - COM	20	V
V_{IN}	Input Signal Voltage	Applied between IN - COM	-0.3 ~ 17.0	V
V_{FO}	Fault Output Supply Voltage	Applied between V_{FO} - COM	-0.3 ~ V_{CC}+0.3	V
I_{FO}	Fault Output Current	Sink Current at V_{FO} Pin	5	mA
V_{SC}	Current Sensing Input Voltage	Applied between C_{SC} - COM	-0.3~V_{CC}+0.3	V

Total System

Symbol	Item	Condition	Rating	Unit
T_C	Module Case Operation Temperature		-20 ~ 100	°C
T_{STG}	Storage Temperature		-40 ~ 125	°C
V_{ISO}	Isolation Voltage	60 Hz, Sinusoidal, AC 1 Minute, Connect Pins to Heat-Sink Plate	2500	V_{rms}

Thermal Resistance

Symbol	Item	Condition	Min.	Typ.	Max.	Unit
$R_{\theta(j-c)Q}$	Junction to Case Thermal Resistance (Referenced to PKG Center)	IGBT	-	-	1.2	°C/W
$R_{\theta(j-c)HD}$		High-Side Diode	-	-	2.0	°C/W
$R_{\theta(j-c)LD}$		Low-Side Diode	-	-	1.4	°C/W

Notes :
3. For the measurement point of case temperature(T_C), please refer to Figure 2.

Electrical Characteristics (T_J = 25°C, unless otherwise specified.)

Converter Part

Symbol	Item	Condition	Min.	Typ.	Max.	Unit
$V_{CE(SAT)}$	IGBT Saturation Voltage	V_{CC} = 15 V, V_{IN} = 5 V, I_C =30 A	-	2.4	3.1	V
V_{FH}	High-Side Diode Voltage	I_F = 30 A	-	1.9	2.5	V
V_{FL}	Low-Side Diode Voltage	I_F = 30 A	-	1.2	1.6	V
t_{ON}	Switching Times	V_{PN} = 400 V, V_{CC} = 15 V, I_C =30 A V_{IN} = 0 V ↔ 5 V, Inductive Load (Note 4)	-	550	-	ns
$t_{C(ON)}$			-	200	-	ns
t_{OFF}			-	430	-	ns
$t_{C(OFF)}$			-	180	-	ns
t_{rr}			-	60	-	ns
I_{rr}			-	6	-	A
R_{SENSE}	Current-Sensing Resistor		1.8	2.0	2.2	mΩ
I_{CES}	Collector - Emitter Leakage Current	V_{CE} = V_{CES}	-	-	250	μA

Notes:
4. t_{ON} and t_{OFF} include the propagation delay of the internal drive IC. $t_{C(ON)}$ and $t_{C(OFF)}$ are the switching time of IGBT itself under the given gate driving condition internally. For the detailed information, please see Figure 4.

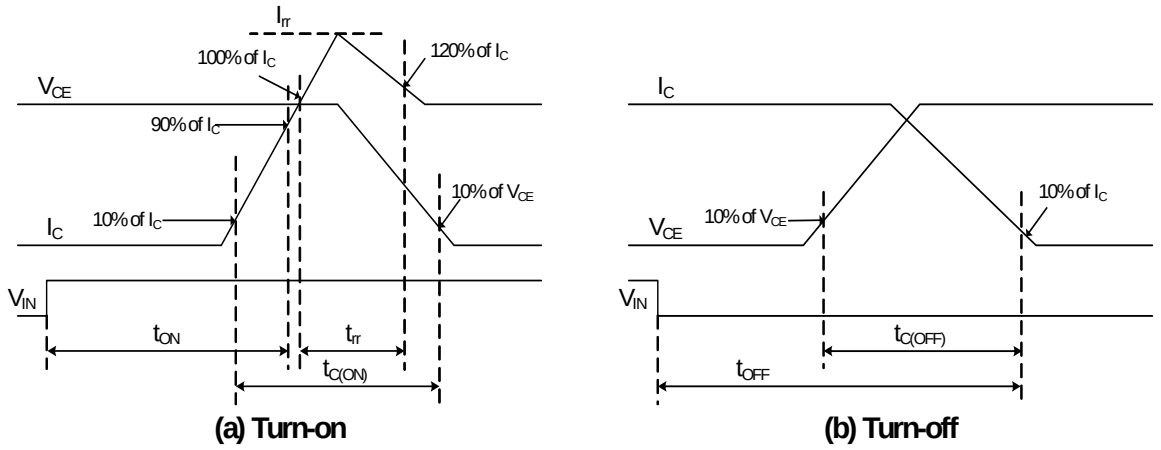

Figure 4. Switching Time Definition

Control Part

Symbol	Item	Condition	Min.	Typ.	Max.	Unit
I_{QCCL}	Quiescent V_{CC} Supply Current	V_{CC} = 15 V, IN = 0 V | V_{CC} - COM	-	-	26	mA
V_{FOH}	Fault Output Voltage	V_{SC} = 0 V, V_{FO} Circuit: 4.7 kΩ to 5 V Pull-up	4.5	-	-	V
V_{FOL}		V_{SC} = 1 V, V_{FO} Circuit: 4.7 kΩ to 5 V Pull-up	-	-	0.8	V
$V_{SC(ref)}$	Over-Current Trip Level	V_{CC} = 15 V	0.45	0.50	0.55	V
UV_{CCD}	Supply Circuit Under-Voltage Protection	Detection Level	10.7	11.9	13.0	V
UV_{CCR}		Reset Level	11.2	12.4	13.2	V
t_{FOD}	Fault-Out Pulse Width	C_{FOD} = 33 nF (Note 5)	1.4	1.8	2.0	ms
$V_{IN(ON)}$	ON Threshold Voltage	Applied between IN - COM	3.0	-	-	V
$V_{IN(OFF)}$	OFF Threshold Voltage		-	-	0.8	V
R_{TH}	Resistance of Thermistor	at T_C = 25°C (See Figure 5)	-	50	-	kΩ
		at T_C = 80°C (See Figure 5)	-	5.76	-	kΩ

Notes:
5. The fault-out pulse width t_{FOD} depends on the capacitance value of C_{FOD} according to the following approximate equation : $C_{FOD} = 18.3 \times 10^{-6} \times t_{FOD}$[F]

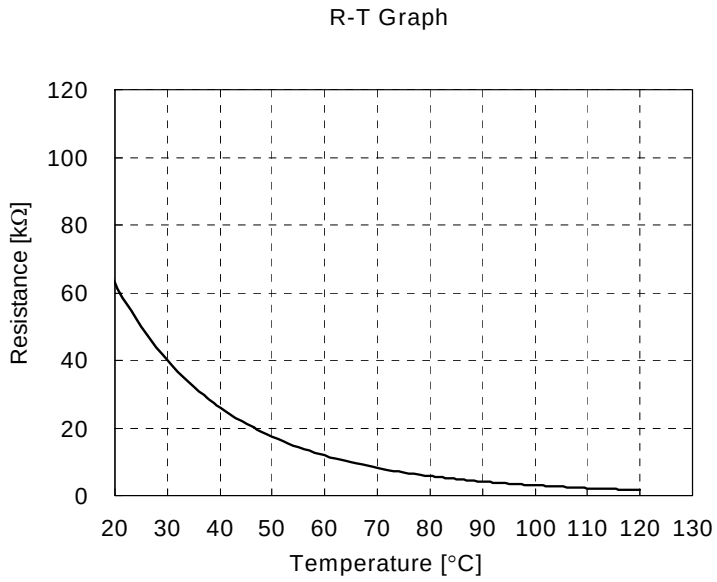

Figure 5. R-T Curve of the Built-in Thermistor

Recommended Operating conditions

Symbol	Item	Condition	Min.	Typ.	Max.	Unit
V_I	Input Supply Voltage	Applied between R - S	180	-	264	V_{rms}
V_{PN}	Output Voltage	Applied between P - N	-	280	400	V
V_{CC}	Control Supply Voltage	Applied between V_{CC} - COM	13.5	15.0	16.5	V
dV_{CC}/dt	Control Supply Variation	Applied between IN - COM	-1	-	1	V/µs
f_{PWM}	PWM Input Signal	$T_C \leq$ 100°C, $T_J \leq$ 125°C, per IGBT	-	20	-	kHz

Mechanical Characteristics and Ratings

Item	Condition		Min.	Typ.	Max.	Units
Mounting Torque	Mounting Screw: M3	Recommended 0.62 N•m	0.51	0.62	0.72	N•m
Device Flatness	See Figure 6		0	-	+120	µm
Weight			-	15.00	-	g

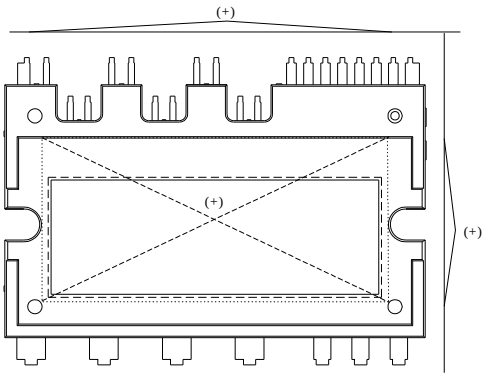

Figure 6. Flatness Measurement Position

Time Charts of Protective Function

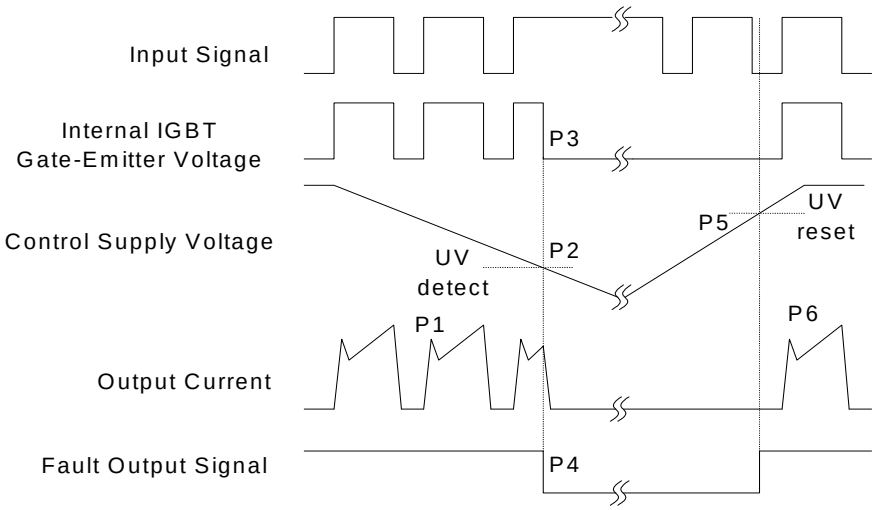

P1 : Normal operation: IGBT ON and conducting current.
P2 : Under-voltage detection.
P3 : IGBT gate interrupt.
P4 : Fault signal generation.
P5 : Under-voltage reset.
P6 : Normal operation: IGBT ON and conducting current.

Figure 7. Under-Voltage Protection

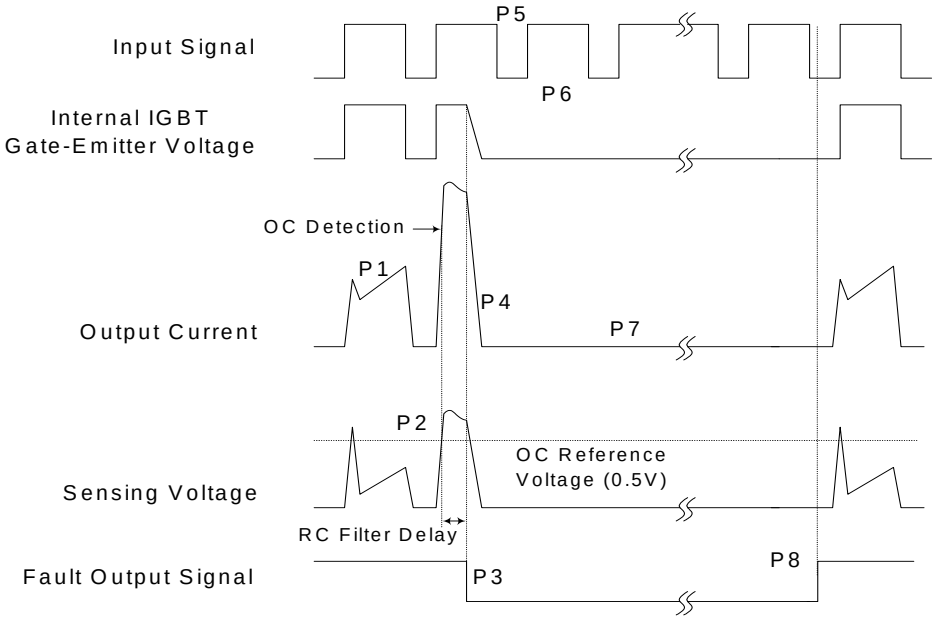

P1 : Normal operation: IGBT ON and conducting current.
P2 : Over current detection.
P3 : IGBT gate interrupt / fault signal generation.
P4 : IGBT is slowly turned off.
P5 : IGBT OFF signal.
P6 : IGBT ON signal: but IGBT cannot be turned on during the fault output activation.
P7 : IGBT OFF state.
P8 : Fault output reset and normal operation start.

Figure 8. Over-Current Protection

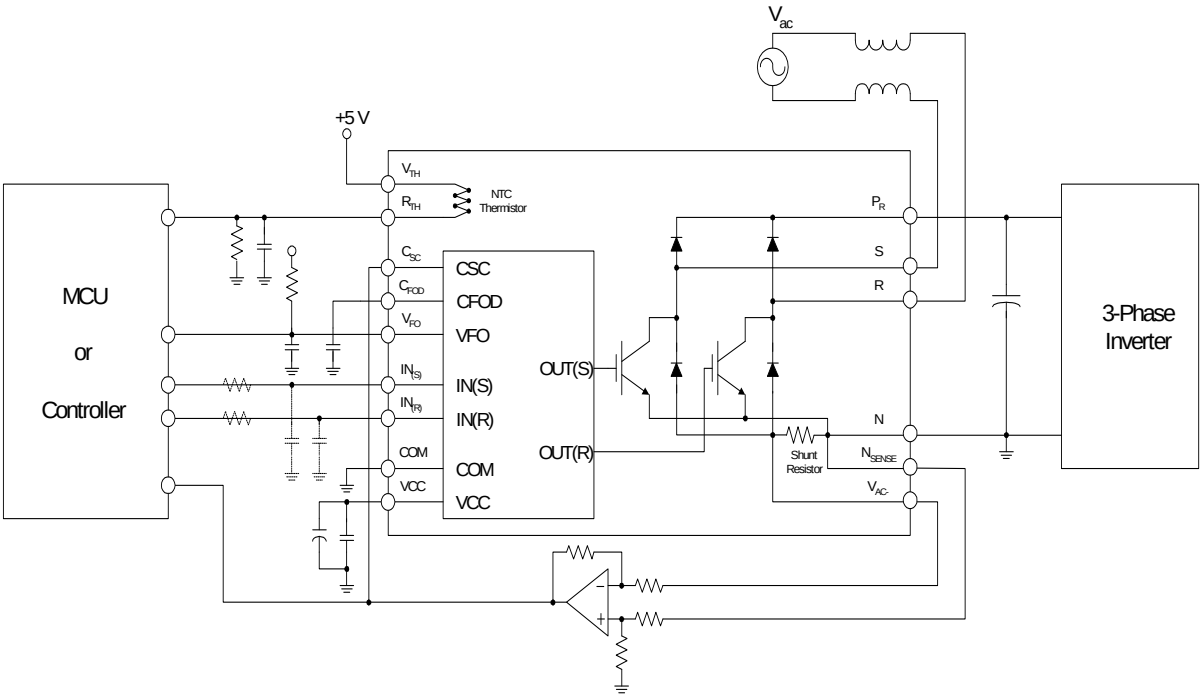

Figure 9. Application Example

Notes:
6. For the over-current protection, please set time constant in the range 3 ~ 4 μs.

Detailed Package Outline Drawings

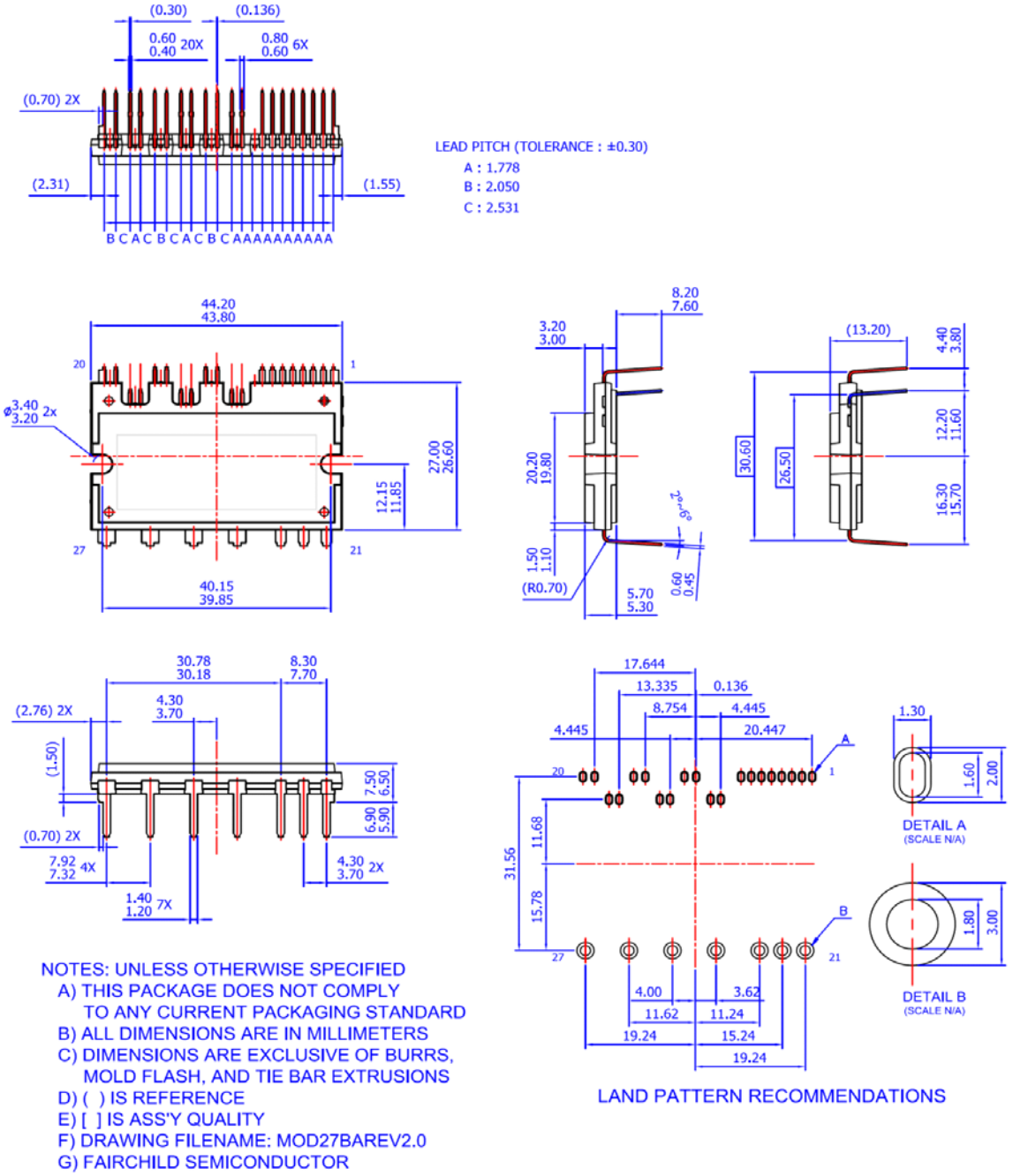

Package drawings are provided as a service to customers considering Fairchild components. Drawings may change in any manner without notice. Please note the revision and/or data on the drawing and contact a FairchildSemiconductor representative to verify or obtain the most recent revision. Package specifications do not expand the terms of Fairchild's worldwide therm and conditions, specifically the the warranty therein, which covers Fairchild products.

Always visit Fairchild Semiconductor's online packaging area for the most recent package drawings:

http://www.fairchildsemi.com/dwg/MO/MOD27BA.pdf

FAIRCHILD SEMICONDUCTOR®

TRADEMARKS

The following includes registered and unregistered trademarks and service marks, owned by Fairchild Semiconductor and/or its global subsidiaries, and is not intended to be an exhaustive list of all such trademarks.

AccuPower™
AX-CAP®*
BitSiC™
Build it Now™
CorePLUS™
CorePOWER™
CROSSVOLT™
CTL™
Current Transfer Logic™
DEUXPEED®
Dual Cool™
EcoSPARK®
EfficientMax™
ESBC™
F®
Fairchild®
Fairchild Semiconductor®
FACT Quiet Series™
FACT®
FAST®
FastvCore™
FETBench™
FPS™
F-PFS™
FRFET®
Global Power Resource℠
GreenBridge™
Green FPS™
Green FPS™ e-Series™
Gmax™
GTO™
IntelliMAX™
ISOPLANAR™
Making Small Speakers Sound Louder and Better™
MegaBuck™
MICROCOUPLER™
MicroFET™
MicroPak™
MicroPak2™
MillerDrive™
MotionMax™
mWSaver®
OptoHiT™
OPTOLOGIC®
OPTOPLANAR®
PowerTrench®
PowerXS™
Programmable Active Droop™
QFET®
QS™
Quiet Series™
RapidConfigure™
Saving our world, 1mW/W/kW at a time™
SignalWise™
SmartMax™
SMART START™
Solutions for Your Success™
SPM®
STEALTH™
SuperFET®
SuperSOT™-3
SuperSOT™-6
SuperSOT™-8
SupreMOS®
SyncFET™
Sync-Lock™
SYSTEM GENERAL®*
TinyBoost®
TinyBuck®
TinyCalc™
TinyLogic®
TINYOPTO™
TinyPower™
TinyPWM™
TinyWire™
TranSiC™
TriFault Detect™
TRUECURRENT®*
µSerDes™
SerDes™
UHC®
Ultra FRFET™
UniFET™
VCX™
VisualMax™
VoltagePlus™
XS™

* Trademarks of System General Corporation, used under license by Fairchild Semiconductor.

DISCLAIMER

FAIRCHILD SEMICONDUCTOR RESERVES THE RIGHT TO MAKE CHANGES WITHOUT FURTHER NOTICE TO ANY PRODUCTS HEREIN TO IMPROVE RELIABILITY, FUNCTION, OR DESIGN. FAIRCHILD DOES NOT ASSUME ANY LIABILITY ARISING OUT OF THE APPLICATION OR USE OF ANY PRODUCT OR CIRCUIT DESCRIBED HEREIN; NEITHER DOES IT CONVEY ANY LICENSE UNDER ITS PATENT RIGHTS, NOR THE RIGHTS OF OTHERS. THESE SPECIFICATIONS DO NOT EXPAND THE TERMS OF FAIRCHILD'S WORLDWIDE TERMS AND CONDITIONS, SPECIFICALLY THE WARRANTY THEREIN, WHICH COVERS THESE PRODUCTS.

LIFE SUPPORT POLICY

FAIRCHILD'S PRODUCTS ARE NOT AUTHORIZED FOR USE AS CRITICAL COMPONENTS IN LIFE SUPPORT DEVICES OR SYSTEMS WITHOUT THE EXPRESS WRITTEN APPROVAL OF FAIRCHILD SEMICONDUCTOR CORPORATION.

As used herein:

1. Life support devices or systems are devices or systems which, (a) are intended for surgical implant into the body or (b) support or sustain life, and (c) whose failure to perform when properly used in accordance with instructions for use provided in the labeling, can be reasonably expected to result in a significant injury of the user.
2. A critical component in any component of a life support, device, or system whose failure to perform can be reasonably expected to cause the failure of the life support device or system, or to affect its safety or effectiveness.

ANTI-COUNTERFEITING POLICY

Fairchild Semiconductor Corporation's Anti-Counterfeiting Policy. Fairchild's Anti-Counterfeiting Policy is also stated on our external website, www.fairchildsemi.com, under Sales Support.

Counterfeiting of semiconductor parts is a growing problem in the industry. All manufacturers of semiconductor products are experiencing counterfeiting of their parts. Customers who inadvertently purchase counterfeit parts experience many problems such as loss of brand reputation, substandard performance, failed applications, and increased cost of production and manufacturing delays. Fairchild is taking strong measures to protect ourselves and our customers from the proliferation of counterfeit parts. Fairchild strongly encourages customers to purchase Fairchild parts either directly from Fairchild or from Authorized Fairchild Distributors who are listed by country on our web page cited above. Products customers buy either from Fairchild directly or from Authorized Fairchild Distributors are genuine parts, have full traceability, meet Fairchild's quality standards for handling and storage and provide access to Fairchild's full range of up-to-date technical and product information. Fairchild and our Authorized Distributors will stand behind all warranties and will appropriately address any warranty issues that may arise. Fairchild will not provide any warranty coverage or other assistance for parts bought from Unauthorized Sources. Fairchild is committed to combat this global problem and encourage our customers to do their part in stopping this practice by buying direct or from authorized distributors.

PRODUCT STATUS DEFINITIONS

Definition of Terms

Datasheet Identification	Product Status	Definition
Advance Information	Formative / In Design	Datasheet contains the design specifications for product development. Specifications may change in any manner without notice.
Preliminary	First Production	Datasheet contains preliminary data; supplementary data will be published at a later date. Fairchild Semiconductor reserves the right to make changes at any time without notice to improve design.
No Identification Needed	Full Production	Datasheet contains final specifications. Fairchild Semiconductor reserves the right to make changes at any time without notice to improve the design.
Obsolete	Not In Production	Datasheet contains specifications on a product that is discontinued by Fairchild Semiconductor. The datasheet is for reference information only.

Rev. I66

ON Semiconductor and ON are trademarks of Semiconductor Components Industries, LLC dba ON Semiconductor or its subsidiaries in the United States and/or other countries. ON Semiconductor owns the rights to a number of patents, trademarks, copyrights, trade secrets, and other intellectual property. A listing of ON Semiconductor's product/patent coverage may be accessed at www.onsemi.com/site/pdf/Patent−Marking.pdf. ON Semiconductor reserves the right to make changes without further notice to any products herein. ON Semiconductor makes no warranty, representation or guarantee regarding the suitability of its products for any particular purpose, nor does ON Semiconductor assume any liability arising out of the application or use of any product or circuit, and specifically disclaims any and all liability, including without limitation special, consequential or incidental damages. Buyer is responsible for its products and applications using ON Semiconductor products, including compliance with all laws, regulations and safety requirements or standards, regardless of any support or applications information provided by ON Semiconductor. "Typical" parameters which may be provided in ON Semiconductor data sheets and/or specifications can and do vary in different applications and actual performance may vary over time. All operating parameters, including "Typicals" must be validated for each customer application by customer's technical experts. ON Semiconductor does not convey any license under its patent rights nor the rights of others. ON Semiconductor products are not designed, intended, or authorized for use as a critical component in life support systems or any FDA Class 3 medical devices or medical devices with a same or similar classification in a foreign jurisdiction or any devices intended for implantation in the human body. Should Buyer purchase or use ON Semiconductor products for any such unintended or unauthorized application, Buyer shall indemnify and hold ON Semiconductor and its officers, employees, subsidiaries, affiliates, and distributors harmless against all claims, costs, damages, and expenses, and reasonable attorney fees arising out of, directly or indirectly, any claim of personal injury or death associated with such unintended or unauthorized use, even if such claim alleges that ON Semiconductor was negligent regarding the design or manufacture of the part. ON Semiconductor is an Equal Opportunity/Affirmative Action Employer. This literature is subject to all applicable copyright laws and is not for resale in any manner.

PUBLICATION ORDERING INFORMATION

LITERATURE FULFILLMENT:
Literature Distribution Center for ON Semiconductor
19521 E. 32nd Pkwy, Aurora, Colorado 80011 USA
Phone: 303−675−2175 or 800−344−3860 Toll Free USA/Canada
Fax: 303−675−2176 or 800−344−3867 Toll Free USA/Canada
Email: orderlit@onsemi.com

N. American Technical Support: 800−282−9855 Toll Free USA/Canada
Europe, Middle East and Africa Technical Support:
Phone: 421 33 790 2910
Japan Customer Focus Center
Phone: 81−3−5817−1050

ON Semiconductor Website: **www.onsemi.com**

Order Literature: http://www.onsemi.com/orderlit

For additional information, please contact your local Sales Representative